FRONT VIEW

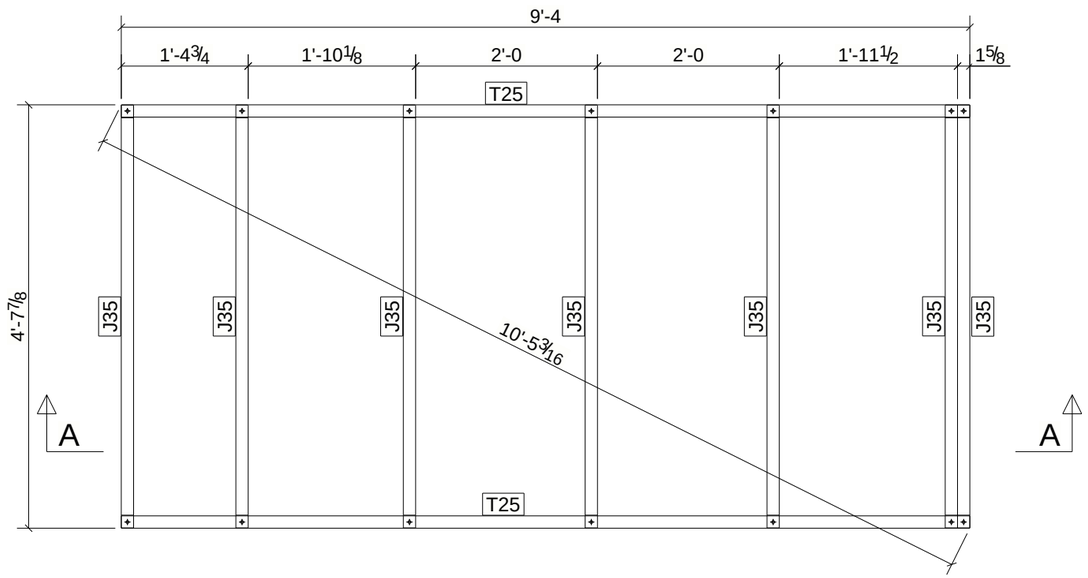


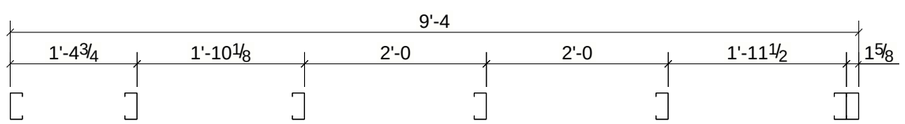


A - A

# BILL OF MATERIAL

| MARK | QTY | DESCRIPTION | LENGTH | WEIGHT | REMARKS |
|---|---|---|---|---|---|
| CP14 | 1 | CEILING PANEL | | | SQ-2 |
| T25 | 1 | 350S162-33 | 9'-4" | 8.19 | A653-GR.50 |
| J35 | 7 | 350S162-33 | 4'-7 13/16" | 28.58 | A653-GR.50 |
| T25 | 1 | 350S162-33 | 9'-4" | 8.19 | A653-GR.50 |
| | | TOTAL WEIGHT THIS DRAWING | | 45 | |

| REV | DESCRIPTION | DATE |
|---|---|---|
| | | |

| | | | |
|---|---|---|---|
| DESCRIPTION | | | |
| PROJECT NAME | | | |
| DRAWN BY | VN | JOB No. | DRG No. |
| DATE DRAWN | 07/16/2024 | | CP14 |

Tekla structures

# BILL OF MATERIAL

| MARK | QTY | DESCRIPTION | LENGTH | WEIGHT | REMARKS |
|---|---|---|---|---|---|
| CP24 | 1 | CEILING PANEL | | | SQ-2 |
| T15 | 1 | 350S162-33 | 4'-2 1/2" | 3.70 | A653-GR.50 |
| J1 | 1 | 350S162-33 | 2'-3 9/16" | 2.02 | A653-GR.50 |
| J10 | 3 | 350S162-33 | 2'-3 9/16" | 6.05 | A653-GR.50 |
| T11 | 1 | 350S162-33 | 4'-2 1/2" | 3.69 | A653-GR.50 |
| | | TOTAL WEIGHT THIS DRAWING | | 15 | |

FRONT VIEW

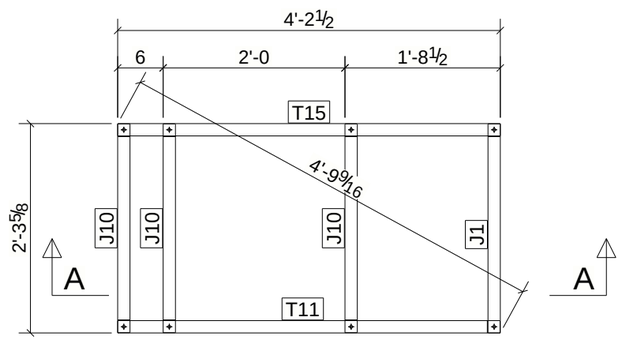


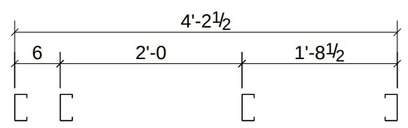


A - A

| REV | DESCRIPTION | DATE |
|---|---|---|
| | | |

| | | | |
|---|---|---|---|
| DESCRIPTION | | | |
| PROJECT NAME | | | |
| DRAWN BY | VN | JOB No. | DRG No. |
| DATE DRAWN | 07/16/2024 | | CP24 |

Tekla structures

# BILL OF MATERIAL

| MARK | QTY | DESCRIPTION | LENGTH | WEIGHT | REMARKS |
|---|---|---|---|---|---|
| CP25 | 1 | CEILING PANEL | | | SQ-2 |
| T35 | 1 | 350S162-33 | 2'-8 3/4" | 2.40 | A653-GR.50 |
| J10 | 3 | 350S162-33 | 2'-3 9/16" | 6.05 | A653-GR.50 |
| T35 | 1 | 350S162-33 | 2'-8 3/4" | 2.40 | A653-GR.50 |
| | | TOTAL WEIGHT THIS DRAWING | | 11 | |

FRONT VIEW

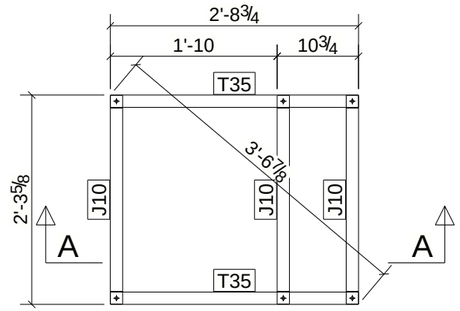


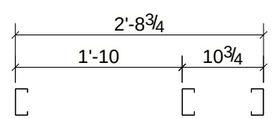


A - A

| REV | DESCRIPTION | DATE |
|---|---|---|
| | | |

| | | | |
|---|---|---|---|
| DESCRIPTION | | | |
| PROJECT NAME | | | |
| DRAWN BY | VN | JOB No. | DRG No. |
| DATE DRAWN | 07/16/2024 | | CP25 |

Tekla structures

# BILL OF MATERIAL

| MARK | QTY | DESCRIPTION | LENGTH | WEIGHT | REMARKS |
|---|---|---|---|---|---|
| CP15 | 1 | CEILING PANEL | | | SQ-2 |
| T1 | 1 | 350S162-33 | 3'-10 15/16" | 3.43 | A653-GR.50 |
| J2 | 3 | 350S162-33 | 3'-5 7/16" | 9.10 | A653-GR.50 |
| T1 | 1 | 350S162-33 | 3'-10 15/16" | 3.43 | A653-GR.50 |
| | | TOTAL WEIGHT THIS DRAWING | | 16 | |

FRONT VIEW

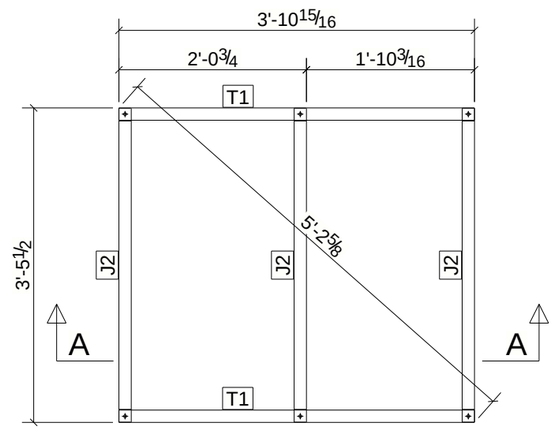


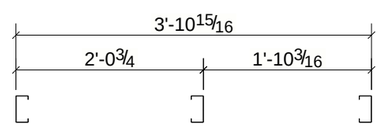


A - A

| REV | DESCRIPTION | DATE |
|---|---|---|
| | | |

| | | | |
|---|---|---|---|
| DESCRIPTION | | | |
| PROJECT NAME | | | |
| DRAWN BY | VN | JOB No. | DRG No. |
| DATE DRAWN | 07/16/2024 | | CP15 |

Tekla structures

# BILL OF MATERIAL

| MARK | QTY | DESCRIPTION | LENGTH | WEIGHT | REMARKS |
|---|---|---|---|---|---|
| CP22 | 1 | CEILING PANEL | | | SQ-2 |
| T37 | 1 | 350S162-33 | 10'-10" | 9.51 | A653-GR.50 |
| J17 | 7 | 350S162-33 | 4'-10 1/2" | 29.96 | A653-GR.50 |
| T37 | 1 | 350S162-33 | 10'-10" | 9.51 | A653-GR.50 |
| | | TOTAL WEIGHT THIS DRAWING | | 49 | |

FRONT VIEW

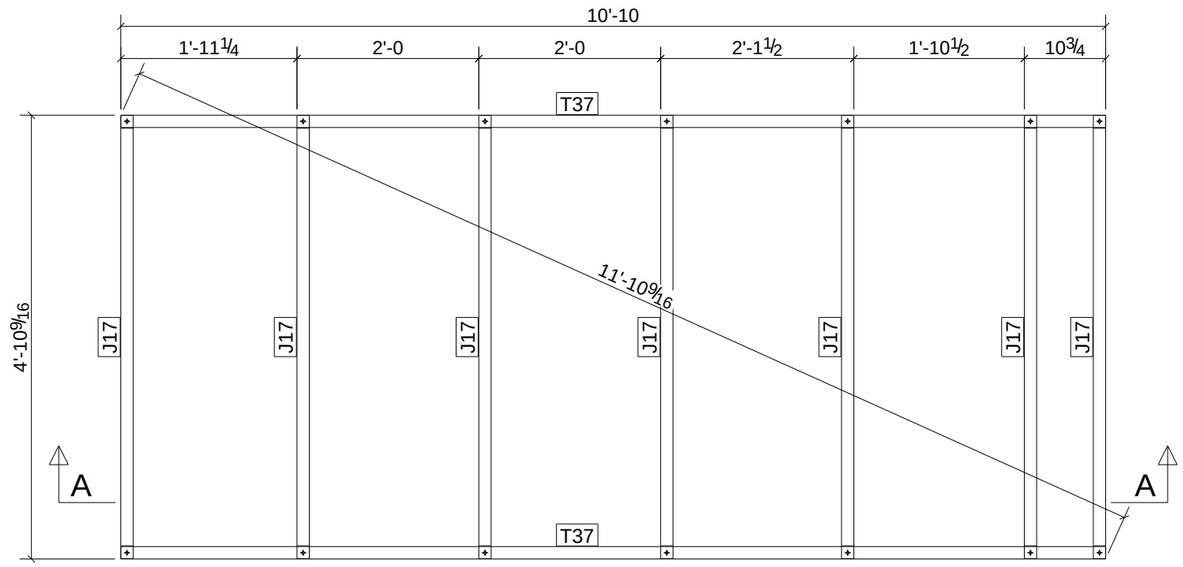


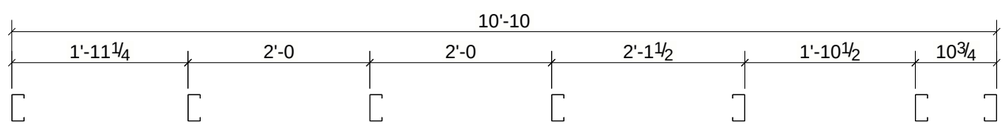


A - A

| REV | DESCRIPTION | DATE |
|---|---|---|
| | | |

| | | | |
|---|---|---|---|
| DESCRIPTION | | | |
| PROJECT NAME | | | |
| DRAWN BY | VN | JOB No. | DRG No. |
| DATE DRAWN | 07/16/2024 | | CP22 |

Tekla structures

# BILL OF MATERIAL

| MARK | QTY | DESCRIPTION | LENGTH | WEIGHT | REMARKS |
|---|---|---|---|---|---|
| CP11 | 1 | CEILING PANEL | | | SQ-2 |
| T26 | 1 | 350S162-33 | 0'-8" | 0.59 | A653-GR.50 |
| J36 | 2 | 350S162-33 | 2'-10 3/16" | 5.00 | A653-GR.50 |
| T26 | 1 | 350S162-33 | 0'-8" | 0.59 | A653-GR.50 |
| | | TOTAL WEIGHT THIS DRAWING | | 6 | |

FRONT VIEW

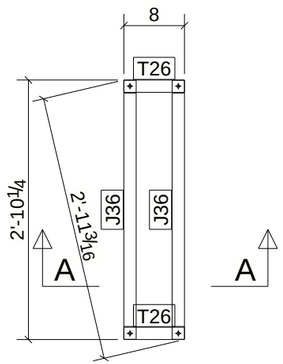

A - A

| REV | DESCRIPTION | DATE |
|---|---|---|
| | | |

| | | | |
|---|---|---|---|
| DESCRIPTION | | | |
| PROJECT NAME | | | |
| DRAWN BY | VN | JOB No. | DRG No. |
| DATE DRAWN | 07/16/2024 | | CP11 |

Tekla structures

# BILL OF MATERIAL

| MARK | QTY | DESCRIPTION | LENGTH | WEIGHT | REMARKS |
|---|---|---|---|---|---|
| CP23 | 1 | CEILING PANEL | | | SQ-2 |
| T5 | 1 | 350S162-33 | 2'-11 3/4" | 2.61 | A653-GR.50 |
| J10 | 3 | 350S162-33 | 2'-3 9/16" | 6.05 | A653-GR.50 |
| T5 | 1 | 350S162-33 | 2'-11 3/4" | 2.61 | A653-GR.50 |
| | | TOTAL WEIGHT THIS DRAWING | | 11 | |

FRONT VIEW

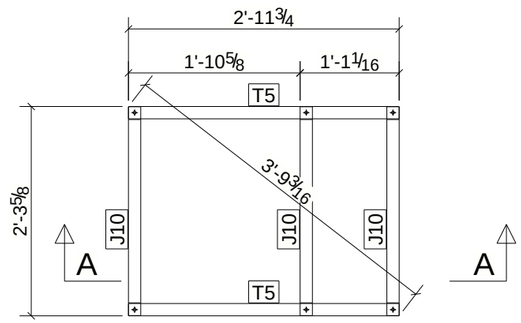


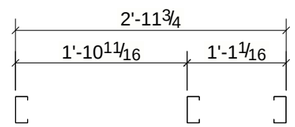


A - A

| REV | DESCRIPTION | DATE |
|---|---|---|
| | | |

| | | | |
|---|---|---|---|
| DESCRIPTION | | | |
| PROJECT NAME | | | |
| DRAWN BY | VN | JOB No. | DRG No. |
| DATE DRAWN | 07/16/2024 | | CP23 |

Tekla structures

# BILL OF MATERIAL

| MARK | QTY | DESCRIPTION | LENGTH | WEIGHT | REMARKS |
|---|---|---|---|---|---|
| CP3 | 1 | CEILING PANEL | | | SQ-2 |
| T18 | 1 | 350S162-33 | 7'-5 5/8" | 6.56 | A653-GR.50 |
| J23 | 6 | 350S162-33 | 2'-5 3/16" | 12.81 | A653-GR.50 |
| T18 | 1 | 350S162-33 | 7'-5 5/8" | 6.56 | A653-GR.50 |
| | | TOTAL WEIGHT THIS DRAWING | | 26 | |

FRONT VIEW

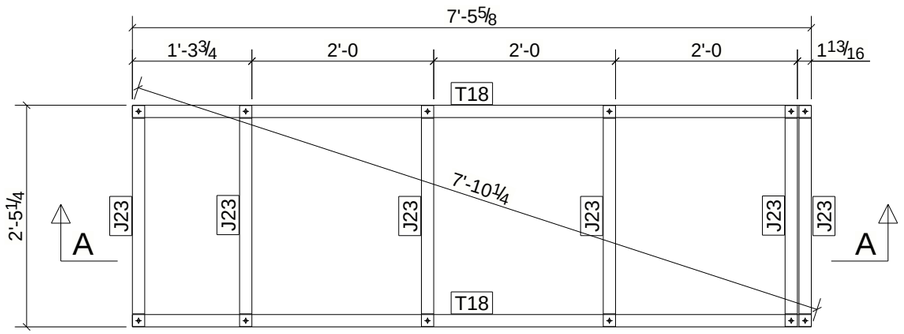


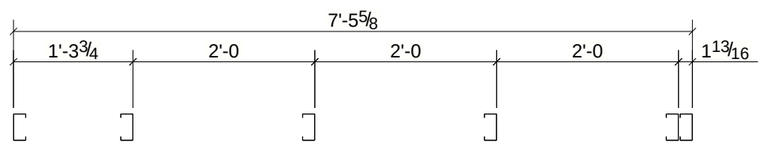


A - A

| REV | DESCRIPTION | DATE |
|---|---|---|
| | | |

| | | | |
|---|---|---|---|
| DESCRIPTION | | | |
| PROJECT NAME | | | |
| DRAWN BY | VN | JOB No. | DRG No. |
| DATE DRAWN | 07/16/2024 | | CP3 |

Tekla structures

# BILL OF MATERIAL

| MARK | QTY | DESCRIPTION | LENGTH | WEIGHT | REMARKS |
|---|---|---|---|---|---|
| CP4 | 1 | CEILING PANEL | | | SQ-2 |
| T17 | 1 | 350S162-33 | 5'-0 9/16" | 4.43 | A653-GR.50 |
| J23 | 4 | 350S162-33 | 2'-5 3/16" | 8.54 | A653-GR.50 |
| T17 | 1 | 350S162-33 | 5'-0 9/16" | 4.43 | A653-GR.50 |
| | | TOTAL WEIGHT THIS DRAWING | | 17 | |

FRONT VIEW

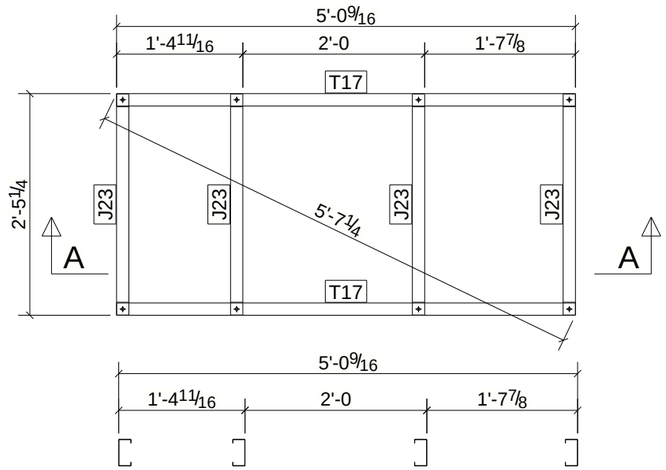


A - A

| REV | DESCRIPTION | DATE |
|---|---|---|
| | | |

| | | | |
|---|---|---|---|
| DESCRIPTION | | | |
| PROJECT NAME | | | |
| DRAWN BY | VN | JOB No. | DRG No. |
| DATE DRAWN | 07/16/2024 | | CP4 |

Tekla structures

# BILL OF MATERIAL

| MARK | QTY | DESCRIPTION | LENGTH | WEIGHT | REMARKS |
|---|---|---|---|---|---|
| CP17 | 1 | CEILING PANEL | | | SQ-2 |
| T23 | 1 | 350S162-33 | 5'-0 3/16" | 4.40 | A653-GR.50 |
| J2 | 4 | 350S162-33 | 3'-5 7/16" | 12.13 | A653-GR.50 |
| T23 | 1 | 350S162-33 | 5'-0 3/16" | 4.40 | A653-GR.50 |
| | | TOTAL WEIGHT THIS DRAWING | | 21 | |

FRONT VIEW

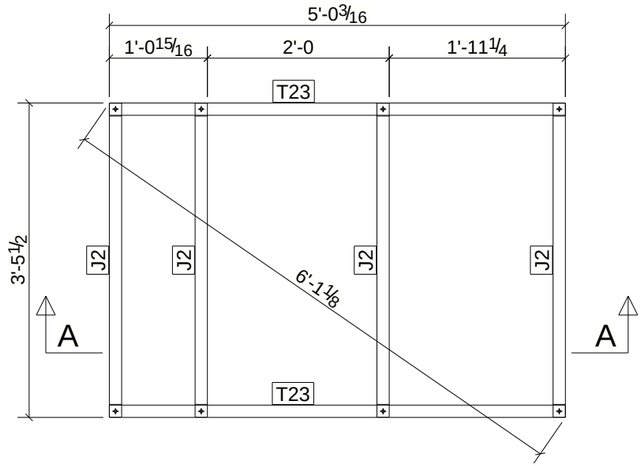


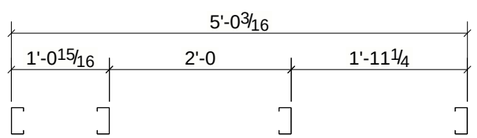


A - A

| REV | DESCRIPTION | DATE |
|---|---|---|
| | | |

| | | | |
|---|---|---|---|
| DESCRIPTION | | | |
| PROJECT NAME | | | |
| DRAWN BY | VN | JOB No. | DRG No. |
| DATE DRAWN | 07/16/2024 | | CP17 |

Tekla structures

# BILL OF MATERIAL

| MARK | QTY | DESCRIPTION | LENGTH | WEIGHT | REMARKS |
|---|---|---|---|---|---|
| CP27 | 2 | CEILING PANELS | | | SQ-2 |
| T24 | 2 | 350S162-33 | 12'-6 5/8" | 22.05 | A653-GR.50 |
| J28 | 16 | 350S162-33 | 5'-6 3/8" | 77.70 | A653-GR.50 |
| T24 | 2 | 350S162-33 | 12'-6 5/8" | 22.05 | A653-GR.50 |
| | | TOTAL WEIGHT THIS DRAWING | | 122 | |

FRONT VIEW

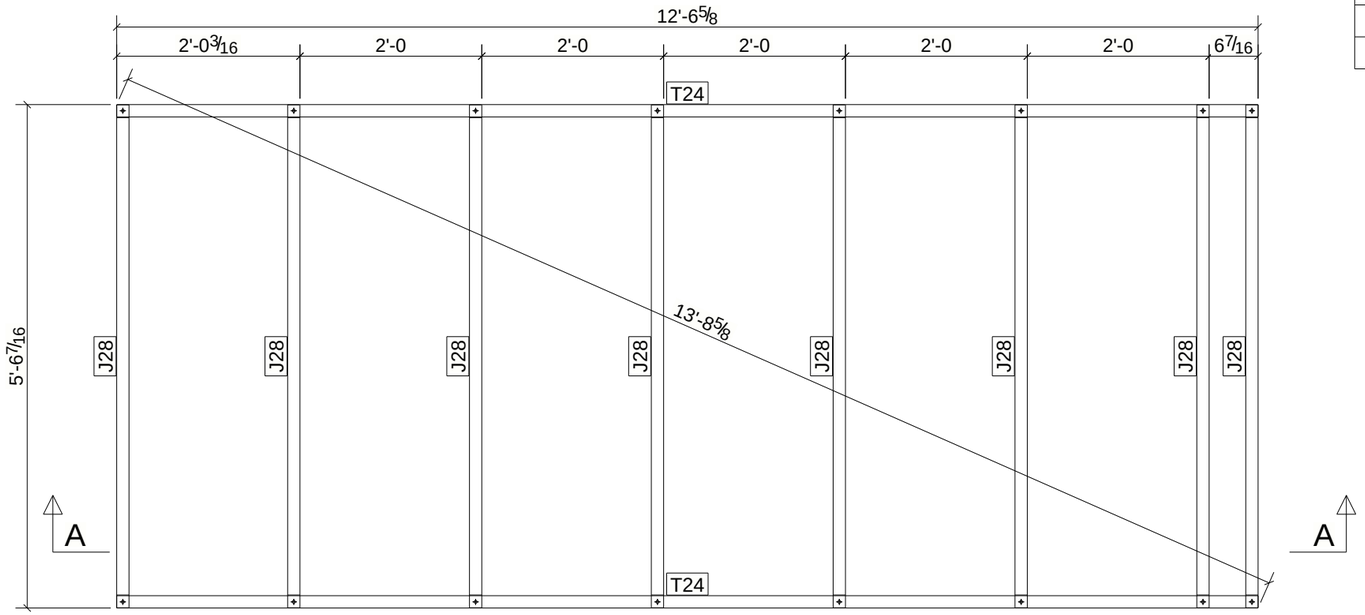


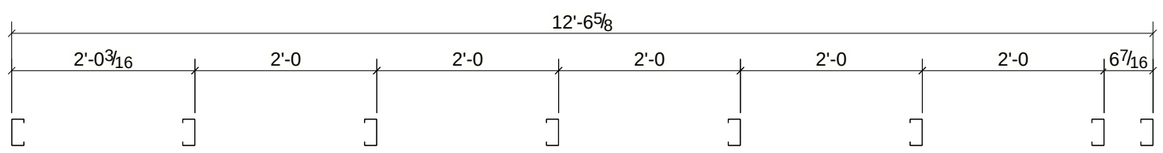


A - A

| REV | DESCRIPTION | DATE |
|---|---|---|
| | | |

| | | | |
|---|---|---|---|
| DESCRIPTION | | | |
| PROJECT NAME | | | |
| DRAWN BY | VN | JOB No. | DRG No. |
| DATE DRAWN | 07/16/2024 | | CP27 |

Tekla structures

# BILL OF MATERIAL

| MARK | QTY | DESCRIPTION | LENGTH | WEIGHT | REMARKS |
|---|---|---|---|---|---|
| CP9 | 1 | CEILING PANEL | | | SQ-2 |
| T27 | 1 | 350S162-33 | 5'-6 1/2" | 4.87 | A653-GR.50 |
| J38 | 4 | 350S162-33 | 4'-5 1/16" | 15.53 | A653-GR.50 |
| T27 | 1 | 350S162-33 | 5'-6 1/2" | 4.87 | A653-GR.50 |
| | | TOTAL WEIGHT THIS DRAWING | | 25 | |

FRONT VIEW

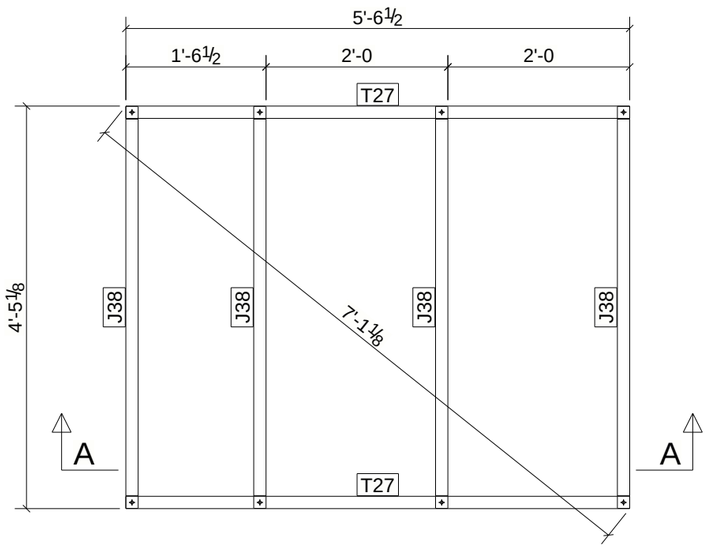


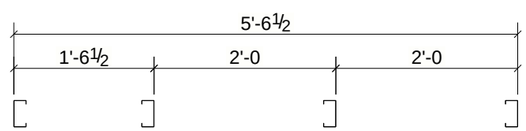


A - A

| REV | DESCRIPTION | DATE |
|---|---|---|
| | | |

| | | | |
|---|---|---|---|
| DESCRIPTION | | | |
| PROJECT NAME | | | |
| DRAWN BY | VN | JOB No. | DRG No. |
| DATE DRAWN | 07/16/2024 | | CP9 |

Tekla structures

# BILL OF MATERIAL

| MARK | QTY | DESCRIPTION | LENGTH | WEIGHT | REMARKS |
|---|---|---|---|---|---|
| CP26 | 1 | CEILING PANEL | | | SQ-2 |
| T1 | 1 | 350S162-33 | 3'-10 15/16" | 3.43 | A653-GR.50 |
| J4 | 3 | 350S162-33 | 1'-11 11/16" | 5.20 | A653-GR.50 |
| T1 | 1 | 350S162-33 | 3'-10 15/16" | 3.43 | A653-GR.50 |
| | | TOTAL WEIGHT THIS DRAWING | | 12 | |

FRONT VIEW

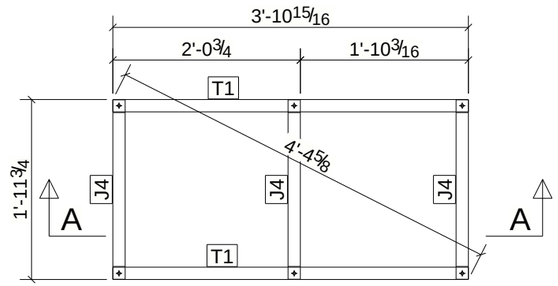


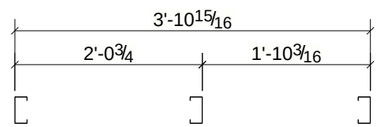


A - A

| REV | DESCRIPTION | DATE |
|---|---|---|
| | | |

| | | | |
|---|---|---|---|
| DESCRIPTION | | | |
| PROJECT NAME | | | |
| DRAWN BY | VN | JOB No. | DRG No. |
| DATE DRAWN | 07/16/2024 | | CP26 |

Tekla structures

# BILL OF MATERIAL

| MARK | QTY | DESCRIPTION | LENGTH | WEIGHT | REMARKS |
|---|---|---|---|---|---|
| CP31 | 1 | CEILING PANEL | | | SQ-2 |
| T29 | 1 | 350S162-33 | 24'-0 3/4" | 21.13 | A653-GR.50 |
| J42 | 13 | 350S162-33 | 1'-10 7/16" | 21.34 | A653-GR.50 |
| T29 | 1 | 350S162-33 | 24'-0 3/4" | 21.13 | A653-GR.50 |
| | | TOTAL WEIGHT THIS DRAWING | | 64 | |

FRONT VIEW

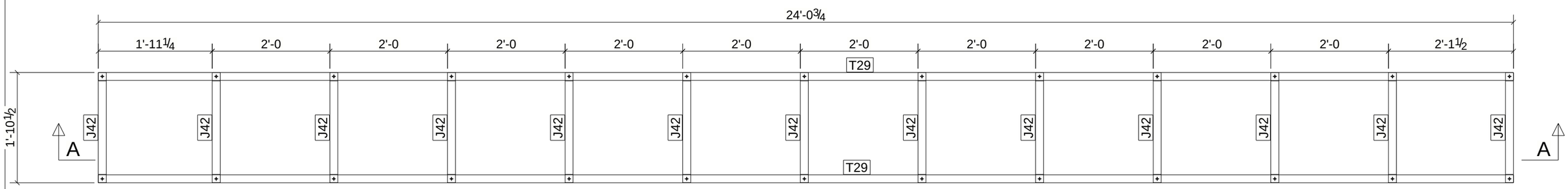


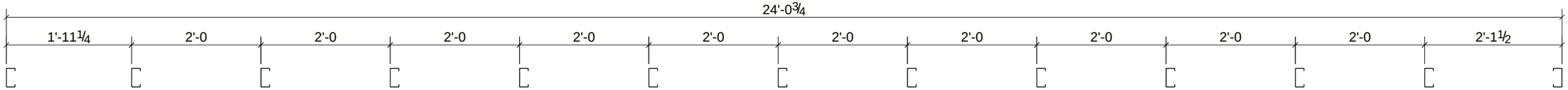


A - A

| REV | DESCRIPTION | DATE |
|---|---|---|
| | | |

| | | | |
|---|---|---|---|
| DESCRIPTION | | | |
| PROJECT NAME | | | |
| DRAWN BY | VN | JOB No. | DRG No. |
| DATE DRAWN | 07/16/2024 | | CP31 |

Tekla structures

# BILL OF MATERIAL

| MARK | QTY | DESCRIPTION | LENGTH | WEIGHT | REMARKS |
|---|---|---|---|---|---|
| CP6 | 1 | CEILING PANEL | | | SQ-2 |
| T2 | 1 | 350S162-33 | 20'-7 1/16" | 18.08 | A653-GR.50 |
| J6 | 12 | 350S162-33 | 2'-2 7/16" | 23.21 | A653-GR.50 |
| T2 | 1 | 350S162-33 | 20'-7 1/16" | 18.08 | A653-GR.50 |
| | | TOTAL WEIGHT THIS DRAWING | | 59 | |

FRONT VIEW

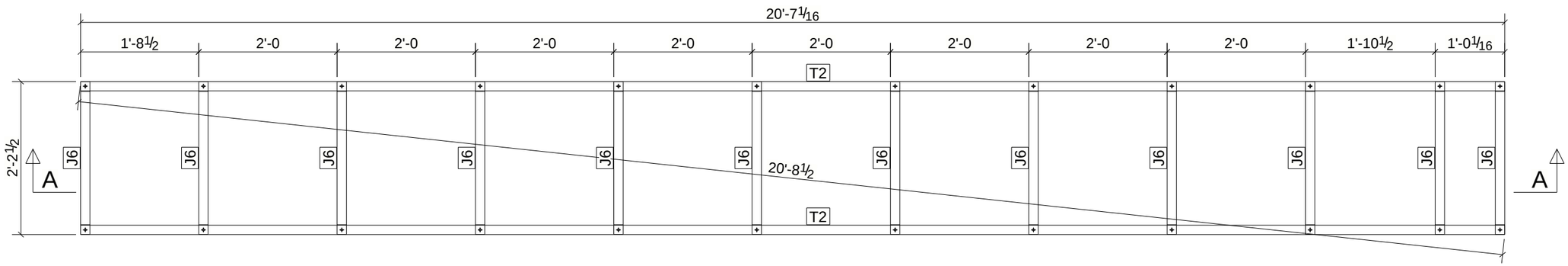


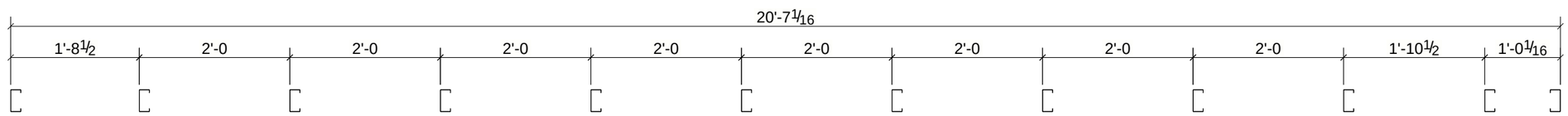


A - A

| REV | DESCRIPTION | DATE |
|---|---|---|
| | | |

| | | | |
|---|---|---|---|
| DESCRIPTION | | | |
| PROJECT NAME | | | |
| DRAWN BY | VN | JOB No. | DRG No. |
| DATE DRAWN | 07/16/2024 | | CP6 |

Tekla structures

# BILL OF MATERIAL

| MARK | QTY | DESCRIPTION | LENGTH | WEIGHT | REMARKS |
|---|---|---|---|---|---|
| CP30 | 1 | CEILING PANEL | | | SQ-2 |
| T10 | 1 | 350S162-33 | 2'-5 5/8" | 2.17 | A653-GR.50 |
| J21 | 3 | 350S162-33 | 1'-10 11/16" | 4.98 | A653-GR.50 |
| T10 | 1 | 350S162-33 | 2'-5 5/8" | 2.17 | A653-GR.50 |
| | | TOTAL WEIGHT THIS DRAWING | | 9 | |

FRONT VIEW

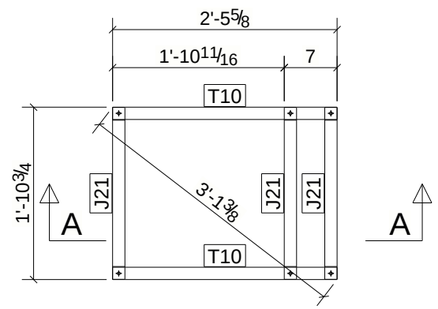


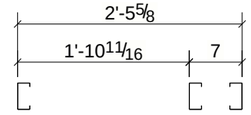


A - A

| REV | DESCRIPTION | DATE |
|---|---|---|
| | | |

| | | | |
|---|---|---|---|
| DESCRIPTION | | | |
| PROJECT NAME | | | |
| DRAWN BY | VN | JOB No. | DRG No. |
| DATE DRAWN | 07/16/2024 | | CP30 |

Tekla structures

# BILL OF MATERIAL

| MARK | QTY | DESCRIPTION | LENGTH | WEIGHT | REMARKS |
|---|---|---|---|---|---|
| CP13 | 1 | CEILING PANEL | | | SQ-2 |
| T8 | 1 | 350S162-33 | 6'-7 1/4" | 5.80 | A653-GR.50 |
| J47 | 6 | 350S162-33 | 2'-0 9/16" | 10.78 | A653-GR.50 |
| T8 | 1 | 350S162-33 | 6'-7 1/4" | 5.80 | A653-GR.50 |
| | | TOTAL WEIGHT THIS DRAWING | | 22 | |

FRONT VIEW

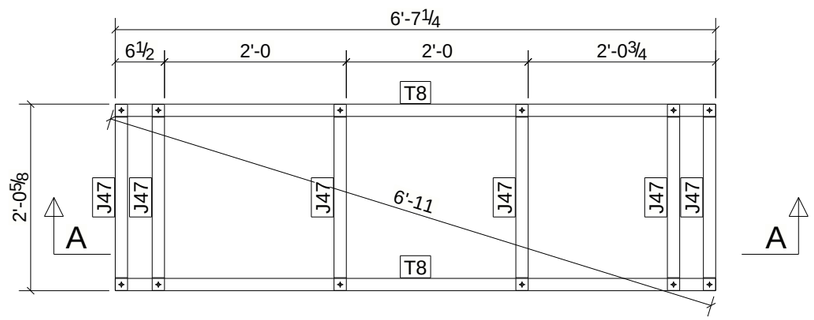


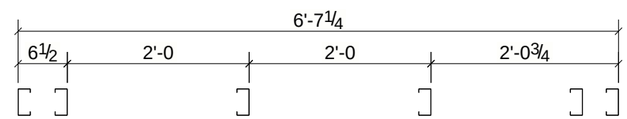


A - A

| REV | DESCRIPTION | DATE |
|---|---|---|
| | | |

| | | | |
|---|---|---|---|
| DESCRIPTION | | | |
| PROJECT NAME | | | |
| DRAWN BY | VN | JOB No. | DRG No. |
| DATE DRAWN | 07/16/2024 | | CP13 |

Tekla structures

# BILL OF MATERIAL

| MARK | QTY | DESCRIPTION | LENGTH | WEIGHT | REMARKS |
|---|---|---|---|---|---|
| CP19 | 2 | CEILING PANELS | | | SQ-2 |
| T20 | 2 | 350S162-33 | 6'-11 5/16" | 12.19 | A653-GR.50 |
| J28 | 10 | 350S162-33 | 5'-6 3/8" | 48.56 | A653-GR.50 |
| T20 | 2 | 350S162-33 | 6'-11 5/16" | 12.19 | A653-GR.50 |
| | | TOTAL WEIGHT THIS DRAWING | | 73 | |

FRONT VIEW

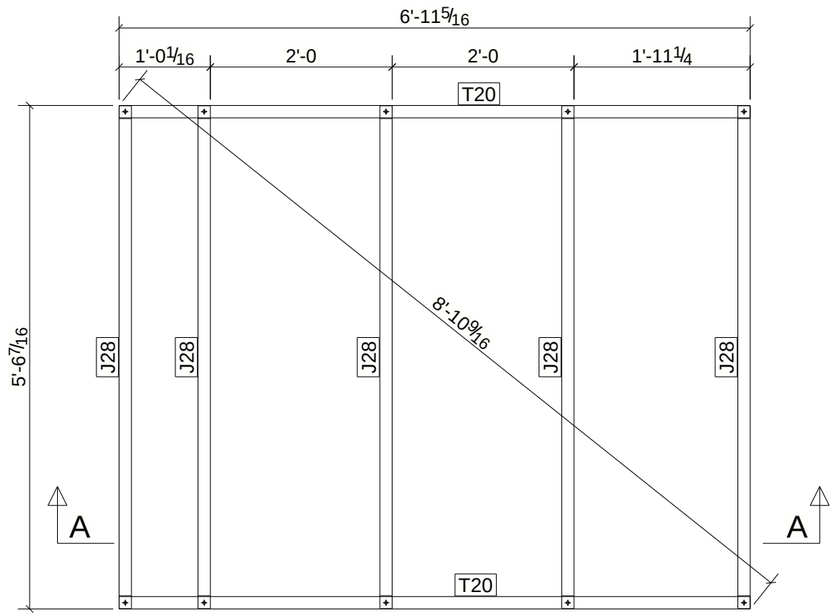


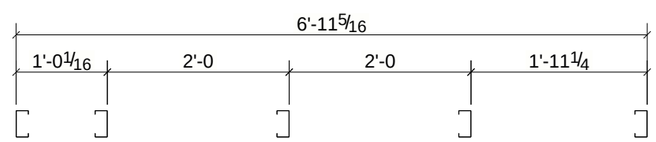


A - A

| REV | DESCRIPTION | DATE |
|---|---|---|
| | | |

| | | | |
|---|---|---|---|
| DESCRIPTION | | | |
| PROJECT NAME | | | |
| DRAWN BY | VN | JOB No. | DRG No. |
| DATE DRAWN | 07/16/2024 | | CP19 |

Tekla structures

# BILL OF MATERIAL

| MARK | QTY | DESCRIPTION | LENGTH | WEIGHT | REMARKS |
|---|---|---|---|---|---|
| CP21 | 1 | CEILING PANEL | | | SQ-2 |
| T21 | 1 | 350S162-33 | 5'-6 3/4" | 4.88 | A653-GR.50 |
| J30 | 5 | 350S162-33 | 2'-11 7/16" | 12.96 | A653-GR.50 |
| T21 | 1 | 350S162-33 | 5'-6 3/4" | 4.88 | A653-GR.50 |
| | | TOTAL WEIGHT THIS DRAWING | | 23 | |

FRONT VIEW

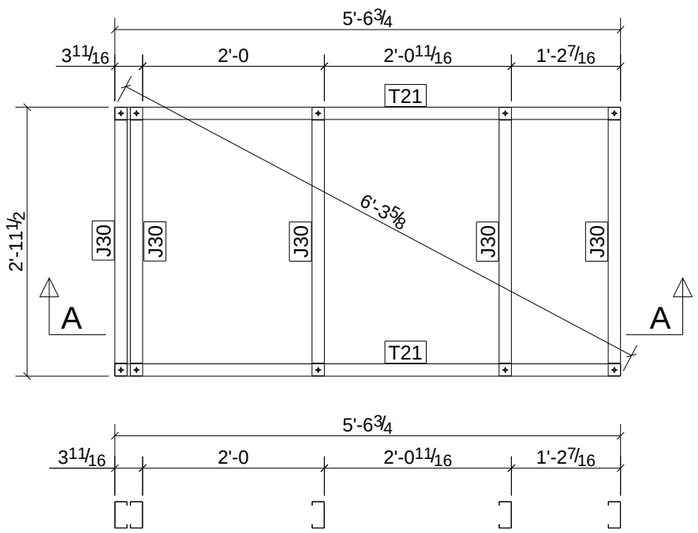


A - A

| REV | DESCRIPTION | DATE |
|---|---|---|
| | | |

| | | | |
|---|---|---|---|
| DESCRIPTION | | | |
| PROJECT NAME | | | |
| DRAWN BY | VN | JOB No. | DRG No. |
| DATE DRAWN | 07/16/2024 | | CP21 |

Tekla structures

FRONT VIEW

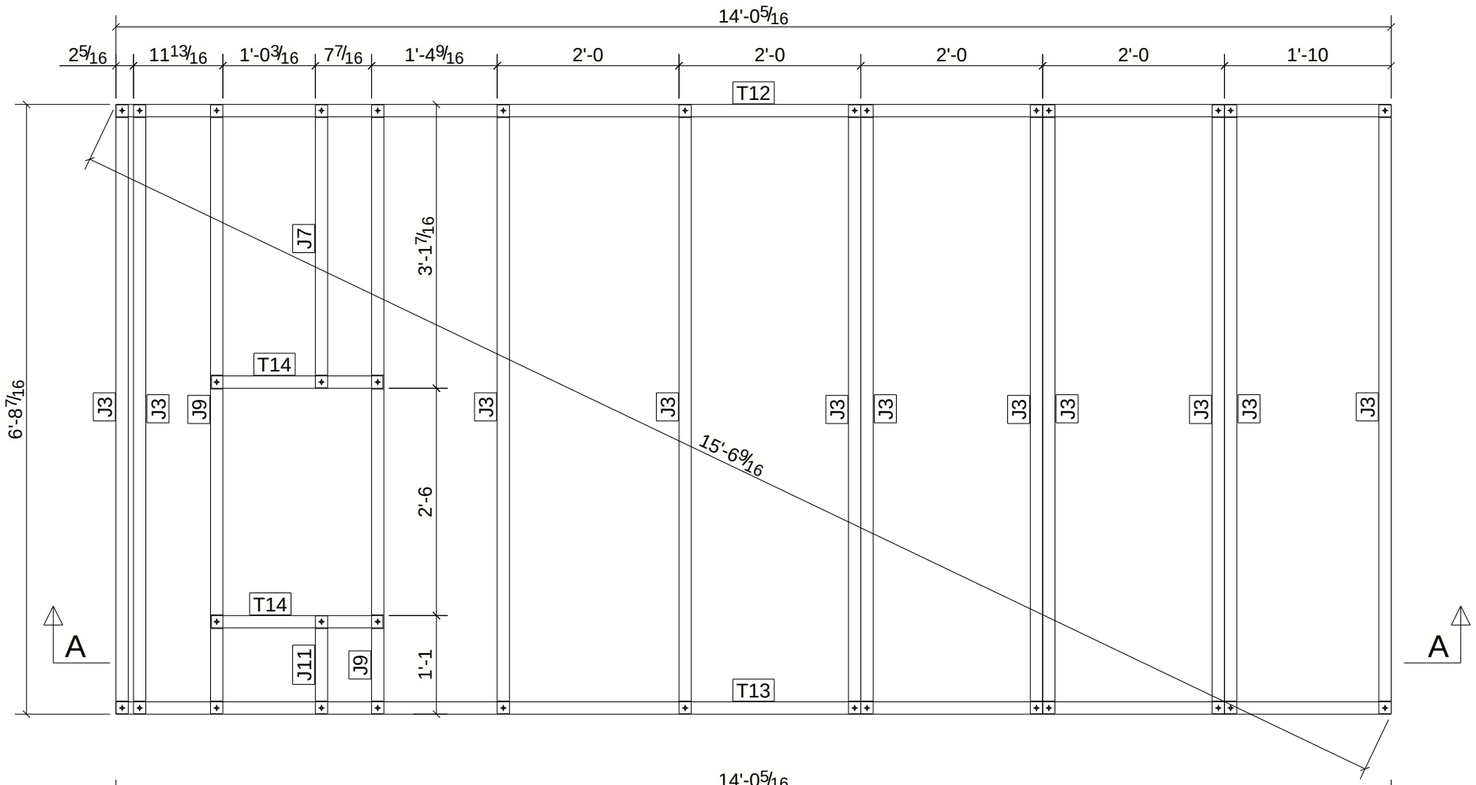


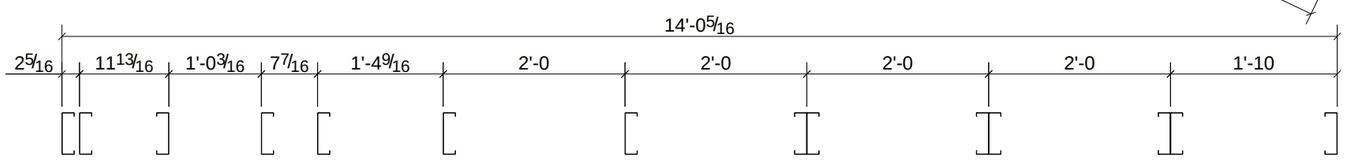


A - A

# BILL OF MATERIAL

| MARK | QTY | DESCRIPTION | LENGTH | WEIGHT | REMARKS |
|---|---|---|---|---|---|
| CP2 | 1 | CEILING PANEL | | | SQ-2 |
| T13 | 1 | 550S162-43 | 14'-0 5/16" | 20.24 | A653-GR.50 |
| J3 | 11 | 550S162-43 | 6'-8 3/8" | 106.32 | A653-GR.50 |
| J7 | 1 | 550S162-43 | 3'-1 3/8" | 4.49 | A653-GR.50 |
| J9 | 2 | 550S162-43 | 6'-8 3/8" | 19.33 | A653-GR.50 |
| J11 | 1 | 550S162-43 | 1'-0 15/16" | 1.55 | A653-GR.50 |
| T12 | 1 | 550S162-43 | 14'-0 5/16" | 20.24 | A653-GR.50 |
| T14 | 2 | 550S162-43 | 1'-10 5/8" | 5.44 | A653-GR.50 |
| | | TOTAL WEIGHT THIS DRAWING | | 178 | |

| REV | DESCRIPTION | DATE |
|---|---|---|
| | | |

| | | | |
|---|---|---|---|
| DESCRIPTION | | | |
| PROJECT NAME | | | |
| DRAWN BY | VN | JOB No. | DRG No. |
| DATE DRAWN | 07/09/2024 | | CP2 |

Tekla structures

# BILL OF MATERIAL

| MARK | QTY | DESCRIPTION | LENGTH | WEIGHT | REMARKS |
|---|---|---|---|---|---|
| CP5 | 1 | CEILING PANEL | | | SQ-2 |
| T30 | 1 | 350S162-33 | 5'-7 15/16" | 4.97 | A653-GR.50 |
| J44 | 4 | 350S162-33 | 2'-1 11/16" | 7.52 | A653-GR.50 |
| T30 | 1 | 350S162-33 | 5'-7 15/16" | 4.97 | A653-GR.50 |
| | | TOTAL WEIGHT THIS DRAWING | | 17 | |

FRONT VIEW

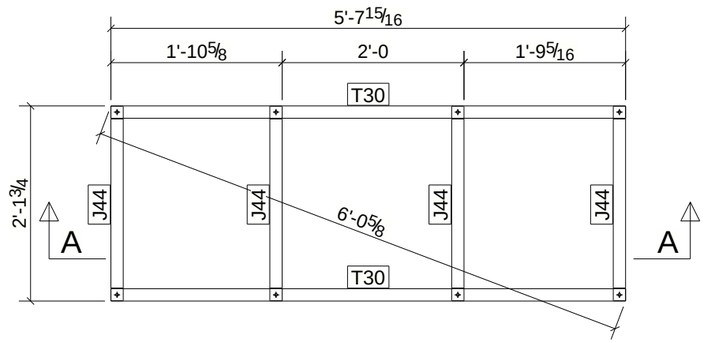


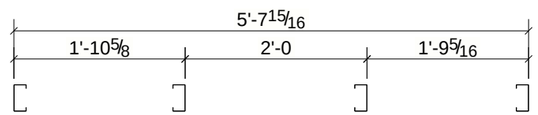


A - A

| REV | DESCRIPTION | DATE |
|---|---|---|
| | | |

| | | | |
|---|---|---|---|
| DESCRIPTION | | | |
| PROJECT NAME | | | |
| DRAWN BY | VN | JOB No. | DRG No. |
| DATE DRAWN | 07/16/2024 | | CP5 |

Tekla structures

# BILL OF MATERIAL

| MARK | QTY | DESCRIPTION | LENGTH | WEIGHT | REMARKS |
|---|---|---|---|---|---|
| CP1 | 1 | CEILING PANEL | | | SQ-2 |
| T16 | 1 | 550S162-43 | 14'-0 5/16" | 20.24 | A653-GR.50 |
| J5 | 13 | 550S162-43 | 7'-11 15/16" | 149.93 | A653-GR.50 |
| T16 | 1 | 550S162-43 | 14'-0 5/16" | 20.24 | A653-GR.50 |
| | | TOTAL WEIGHT THIS DRAWING | | 190 | |

FRONT VIEW

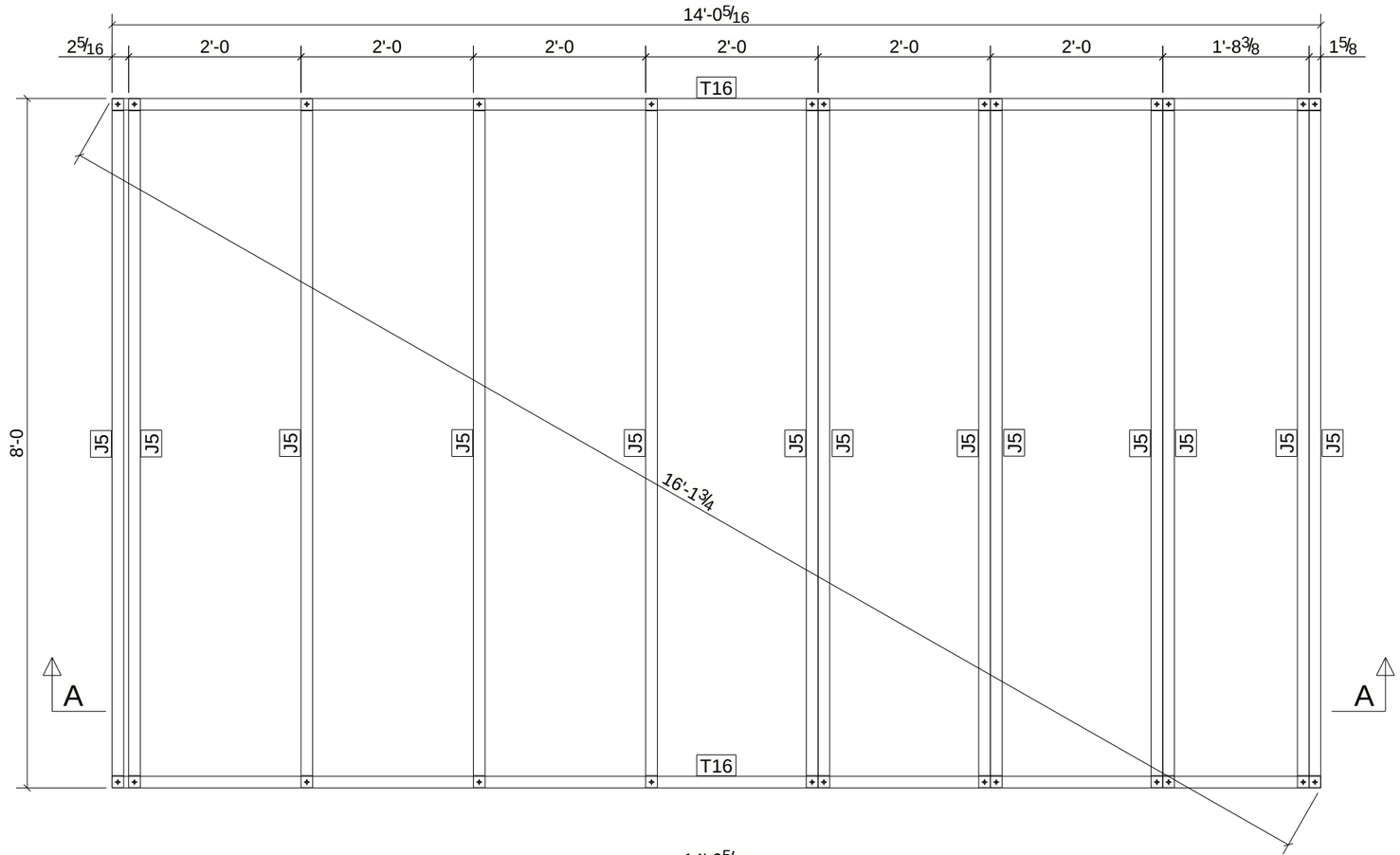


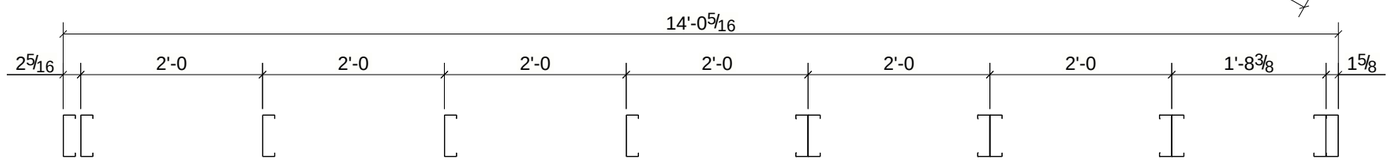


A - A

| REV | DESCRIPTION | DATE |
|---|---|---|
| | | |

| | | | |
|---|---|---|---|
| DESCRIPTION | | | |
| PROJECT NAME | | | |
| DRAWN BY | VN | JOB No. | DRG No. |
| DATE DRAWN | 07/09/2024 | | CP1 |

Tekla structures

# BILL OF MATERIAL

| MARK | QTY | DESCRIPTION | LENGTH | WEIGHT | REMARKS |
|---|---|---|---|---|---|
| CP7 | 1 | CEILING PANEL | | | SQ-2 |
| T6 | 1 | 350S162-33 | 8'-4 7/16" | 7.35 | A653-GR.50 |
| J12 | 6 | 350S162-33 | 7'-1 1/8" | 37.37 | A653-GR.50 |
| T6 | 1 | 350S162-33 | 8'-4 7/16" | 7.35 | A653-GR.50 |
| | | TOTAL WEIGHT THIS DRAWING | | 52 | |

FRONT VIEW

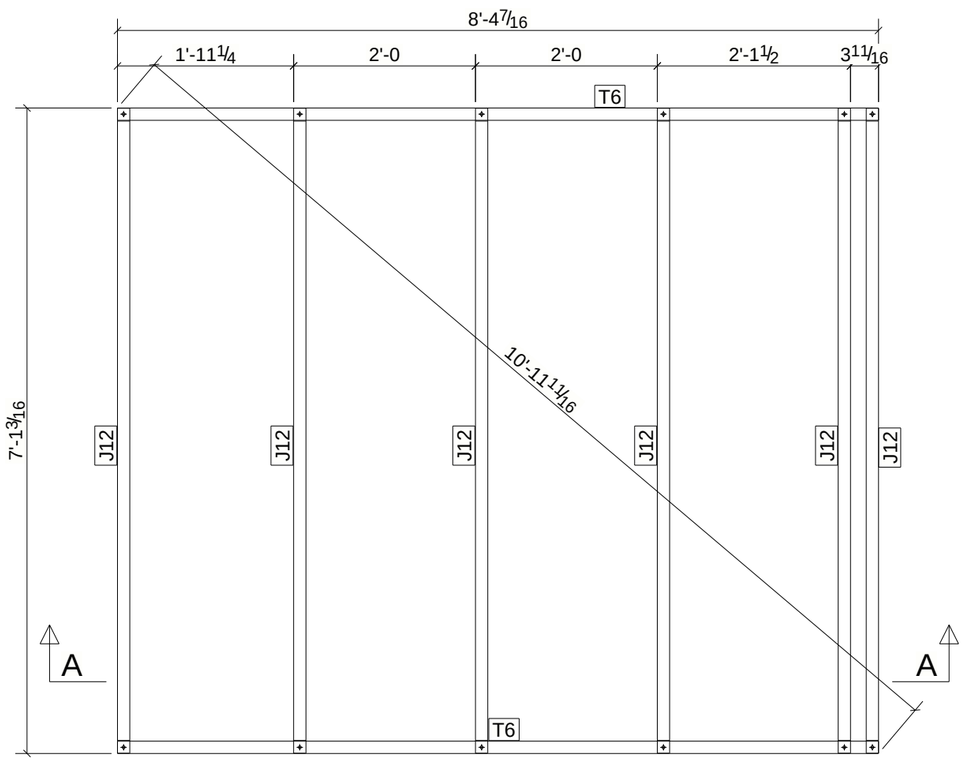


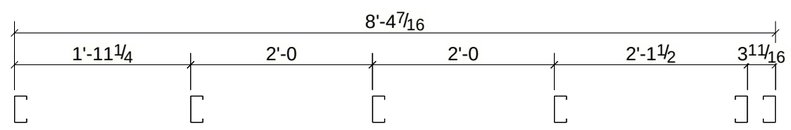


A - A

| REV | DESCRIPTION | DATE |
|---|---|---|
| | | |

| | | | |
|---|---|---|---|
| DESCRIPTION | | | |
| PROJECT NAME | | | |
| DRAWN BY | VN | JOB No. | DRG No. |
| DATE DRAWN | 08/14/2024 | | CP7 |

Tekla structures

FRONT VIEW

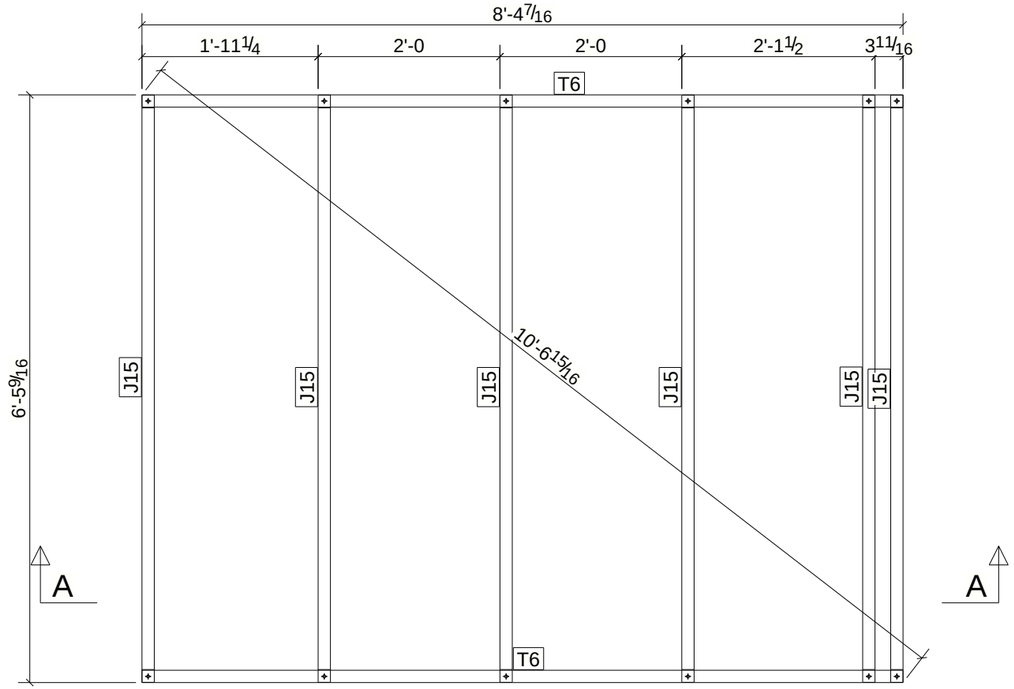


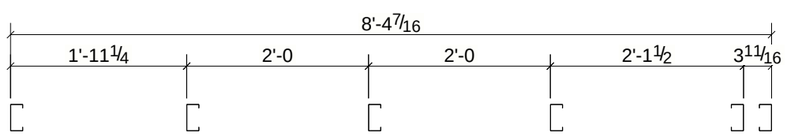


A - A

# BILL OF MATERIAL

| MARK | QTY | DESCRIPTION | LENGTH | WEIGHT | REMARKS |
|---|---|---|---|---|---|
| CP8 | 1 | CEILING PANEL | | | SQ-2 |
| T6 | 1 | 350S162-33 | 8'-4 7/16" | 7.35 | A653-GR.50 |
| J15 | 6 | 350S162-33 | 6'-5 1/2" | 34.02 | A653-GR.50 |
| T6 | 1 | 350S162-33 | 8'-4 7/16" | 7.35 | A653-GR.50 |
| | | TOTAL WEIGHT THIS DRAWING | | 49 | |

| REV | DESCRIPTION | DATE |
|---|---|---|
| | | |

| | | | |
|---|---|---|---|
| DESCRIPTION | | | |
| PROJECT NAME | | | |
| DRAWN BY | VN | JOB No. | DRG No. |
| DATE DRAWN | 08/14/2024 | | CP8 |

Tekla structures

# BILL OF MATERIAL

| MARK | QTY | DESCRIPTION | LENGTH | WEIGHT | REMARKS |
|---|---|---|---|---|---|
| CP12 | 1 | CEILING PANEL | | | SQ-2 |
| T7 | 1 | 350S162-33 | 3'-9 1/4" | 3.31 | A653-GR.50 |
| J47 | 3 | 350S162-33 | 2'-0 9/16" | 5.39 | A653-GR.50 |
| T7 | 1 | 350S162-33 | 3'-9 1/4" | 3.31 | A653-GR.50 |
| | | TOTAL WEIGHT THIS DRAWING | | 12 | |

FRONT VIEW

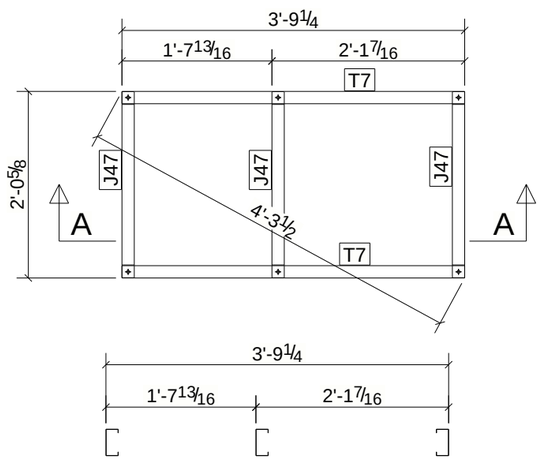


A - A

| REV | DESCRIPTION | DATE |
|---|---|---|
| | | |

| | | | |
|---|---|---|---|
| DESCRIPTION | | | |
| PROJECT NAME | | | |
| DRAWN BY | VN | JOB No. | DRG No. |
| DATE DRAWN | 07/16/2024 | | CP12 |

Tekla structures

# BILL OF MATERIAL

| MARK | QTY | DESCRIPTION | LENGTH | WEIGHT | REMARKS |
|---|---|---|---|---|---|
| CP10 | 1 | CEILING PANEL | | | SQ-2 |
| T28 | 1 | 350S162-33 | 4'-8" | 4.10 | A653-GR.50 |
| J40 | 5 | 350S162-33 | 3'-3 15/16" | 14.61 | A653-GR.50 |
| T28 | 1 | 350S162-33 | 4'-8" | 4.10 | A653-GR.50 |
| | | TOTAL WEIGHT THIS DRAWING | | 23 | |

FRONT VIEW

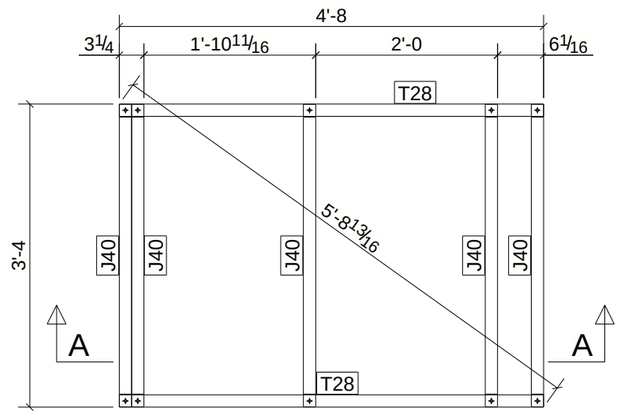


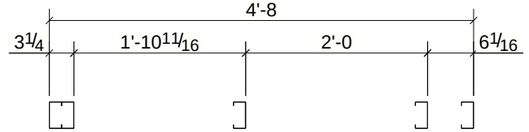


A - A

| REV | DESCRIPTION | DATE |
|---|---|---|
| | | |

| | | | |
|---|---|---|---|
| DESCRIPTION | | | |
| PROJECT NAME | | | |
| DRAWN BY | VN | JOB No. | DRG No. |
| DATE DRAWN | 07/16/2024 | | CP10 |

Tekla structures

FRONT VIEW

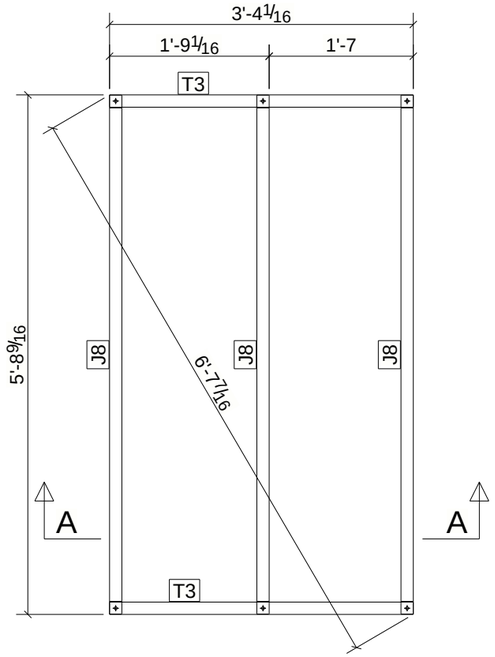


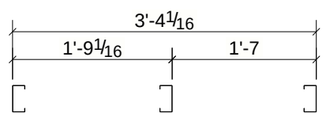


A - A

# BILL OF MATERIAL

| MARK | QTY | DESCRIPTION | LENGTH | WEIGHT | REMARKS |
|---|---|---|---|---|---|
| CP32 | 1 | CEILING PANEL | | | SQ-2 |
| T3 | 1 | 350S162-33 | 3'-4 1/16" | 2.93 | A653-GR.50 |
| J8 | 3 | 350S162-33 | 5'-8 1/2" | 15.04 | A653-GR.50 |
| T3 | 1 | 350S162-33 | 3'-4 1/16" | 2.93 | A653-GR.50 |
| | | TOTAL WEIGHT THIS DRAWING | | 21 | |

| REV | DESCRIPTION | DATE |
|---|---|---|
| | | |

| | | | |
|---|---|---|---|
| DESCRIPTION | | | |
| PROJECT NAME | | | |
| DRAWN BY | VN | JOB No. | DRG No. |
| DATE DRAWN | 07/16/2024 | | CP32 |

Tekla structures

# BILL OF MATERIAL

| MARK | QTY | DESCRIPTION | LENGTH | WEIGHT | REMARKS |
|---|---|---|---|---|---|
| CP20 | 1 | CEILING PANEL | | | SQ-2 |
| T19 | 1 | 350S162-33 | 5'-0 1/2" | 4.43 | A653-GR.50 |
| J26 | 5 | 350S162-33 | 3'-5" | 15.00 | A653-GR.50 |
| T19 | 1 | 350S162-33 | 5'-0 1/2" | 4.43 | A653-GR.50 |
| | | TOTAL WEIGHT THIS DRAWING | | 24 | |

FRONT VIEW

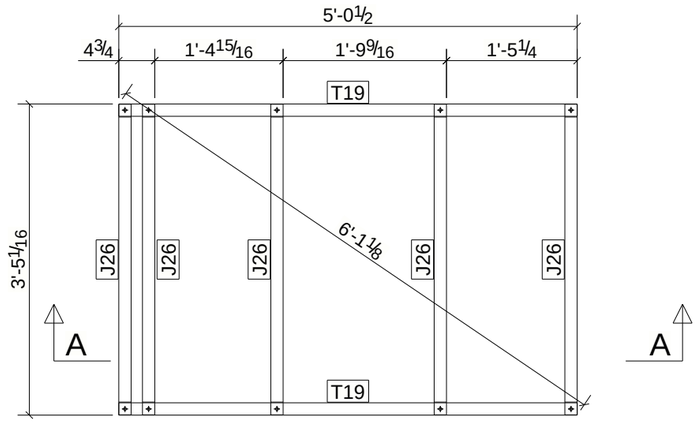


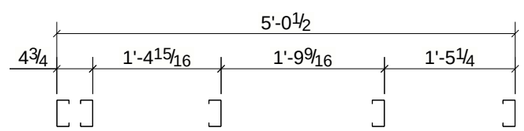


A - A

| REV | DESCRIPTION | DATE |
|---|---|---|
| | | |

| | | | |
|---|---|---|---|
| DESCRIPTION | | | |
| PROJECT NAME | | | |
| DRAWN BY | VN | JOB No. | DRG No. |
| DATE DRAWN | 07/16/2024 | | CP20 |

Tekla structures

FRONT VIEW

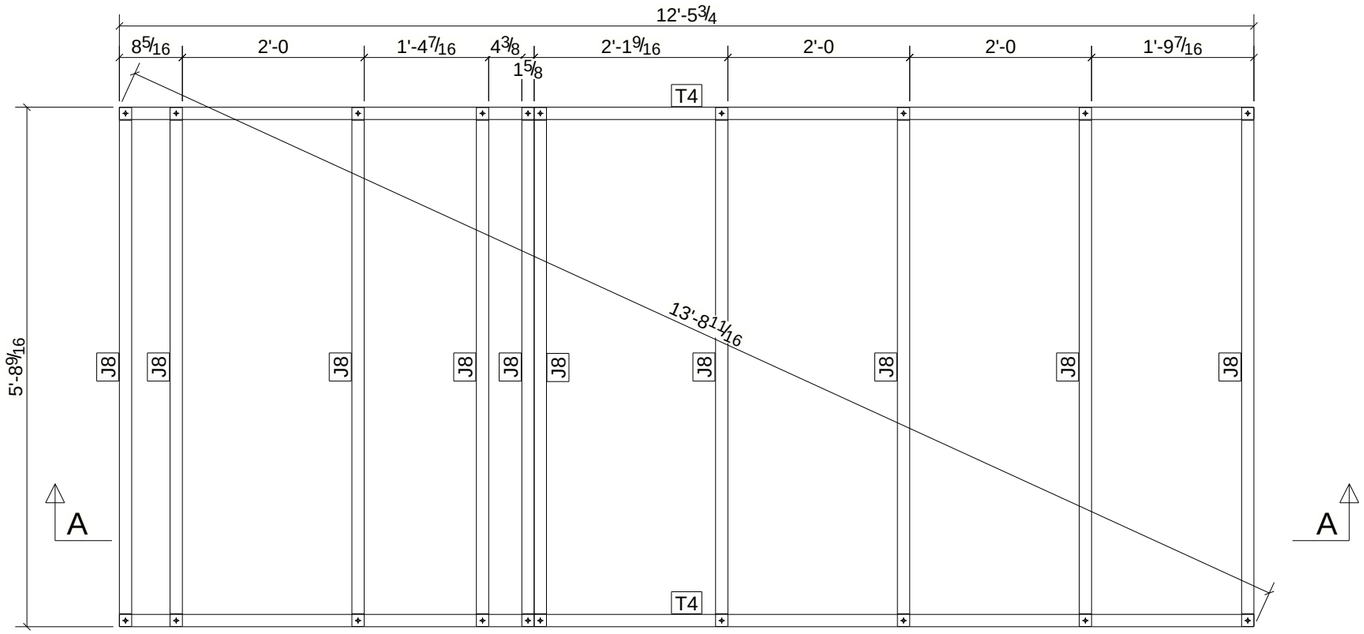


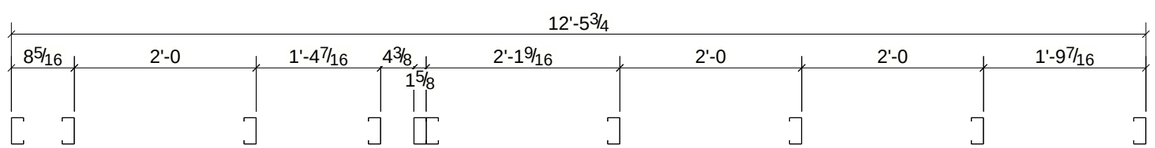


A - A

# BILL OF MATERIAL

| MARK | QTY | DESCRIPTION | LENGTH | WEIGHT | REMARKS |
|---|---|---|---|---|---|
| CP33 | 1 | CEILING PANEL | | | SQ-2 |
| T4 | 1 | 350S162-33 | 12'-5 3/4" | 10.96 | A653-GR.50 |
| J8 | 10 | 350S162-33 | 5'-8 1/2" | 50.12 | A653-GR.50 |
| T4 | 1 | 350S162-33 | 12'-5 3/4" | 10.96 | A653-GR.50 |
| | | TOTAL WEIGHT THIS DRAWING | | 72 | |

| REV | DESCRIPTION | DATE |
|---|---|---|
| | | |

| | | | |
|---|---|---|---|
| DESCRIPTION | | | |
| PROJECT NAME | | | |
| DRAWN BY | VN | JOB No. | DRG No. |
| DATE DRAWN | 07/16/2024 | | CP33 |

Tekla structures

# BILL OF MATERIAL

| MARK | QTY | DESCRIPTION | LENGTH | WEIGHT | REMARKS |
|---|---|---|---|---|---|
| CP29 | 1 | CEILING PANEL | | | SQ-2 |
| T9 | 1 | 350S162-33 | 11'-6 3/4" | 10.15 | A653-GR.50 |
| J19 | 7 | 350S162-33 | 2'-0 1/16" | 12.32 | A653-GR.50 |
| T9 | 1 | 350S162-33 | 11'-6 3/4" | 10.15 | A653-GR.50 |
| | | TOTAL WEIGHT THIS DRAWING | | 33 | |

FRONT VIEW

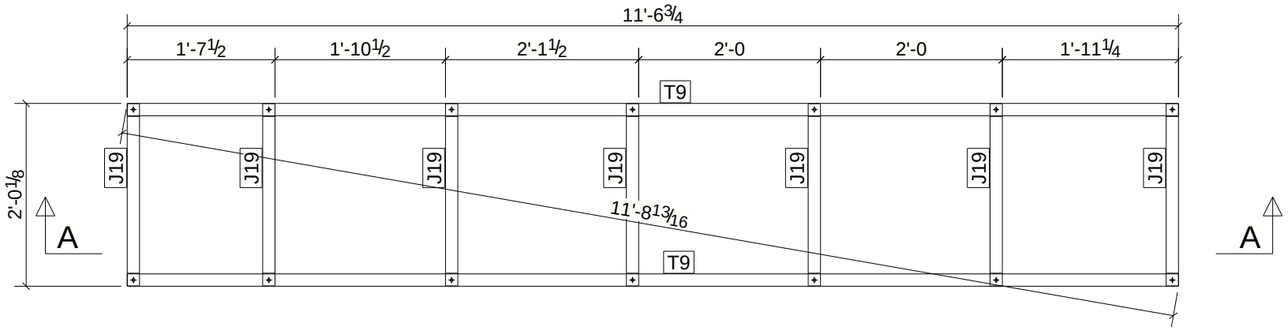


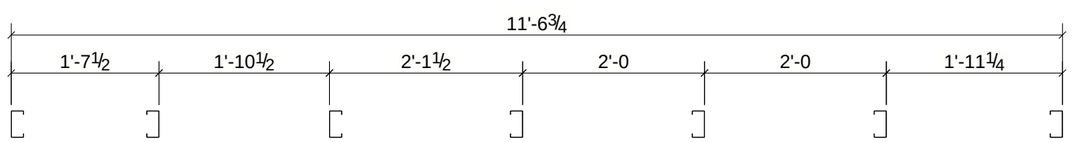


A - A

| REV | DESCRIPTION | DATE |
|---|---|---|
| | | |

| | | | |
|---|---|---|---|
| DESCRIPTION | | | |
| PROJECT NAME | | | |
| DRAWN BY | VN | JOB No. | DRG No. |
| DATE DRAWN | 07/16/2024 | | CP29 |

Tekla structures

# BILL OF MATERIAL

| MARK | QTY | DESCRIPTION | LENGTH | WEIGHT | REMARKS |
|---|---|---|---|---|---|
| CP16 | 1 | CEILING PANEL | | | SQ-2 |
| T22 | 1 | 350S162-33 | 5'-7" | 4.90 | A653-GR.50 |
| J32 | 4 | 350S162-33 | 2'-11 15/16" | 10.52 | A653-GR.50 |
| T22 | 1 | 350S162-33 | 5'-7" | 4.90 | A653-GR.50 |
| | | TOTAL WEIGHT THIS DRAWING | | 20 | |

FRONT VIEW

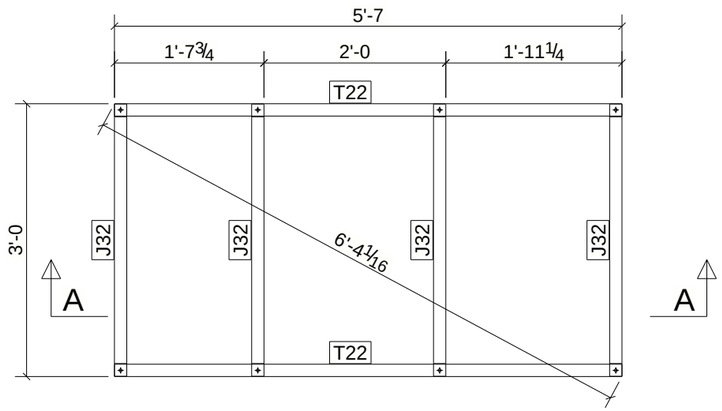


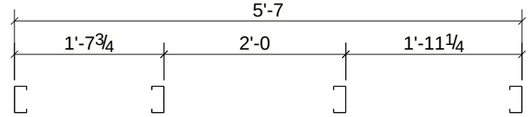


A - A

| REV | DESCRIPTION | DATE |
|---|---|---|
| | | |

| | | | |
|---|---|---|---|
| DESCRIPTION | | | |
| PROJECT NAME | | | |
| DRAWN BY | VN | JOB No. | DRG No. |
| DATE DRAWN | 07/16/2024 | | CP16 |

Tekla structures

# BILL OF MATERIAL

| MARK | QTY | DESCRIPTION | LENGTH | WEIGHT | REMARKS |
|---|---|---|---|---|---|
| H1 | 1 | HEADER | | | SQ-2 |
| W21 | 1 | 550S162-43 | 1'-1 1/4" | 1.59 | A913-GR.50 |
| BC8 | 1 | 550S162-43 | 11'-9" | 16.95 | A913-GR.50 |
| PL6 | 4 | PL0.0430X5.0000 | 11'-9" | 34.39 | A913-GR.50 |
| TC8 | 1 | 550S162-43 | 11'-9" | 16.95 | A913-GR.50 |
| W21 | 8 | 550S162-43 | 1'-1 1/4" | 12.72 | A913-GR.50 |
| W30 | 2 | 550S162-43 | 1'-6 5/8" | 4.49 | A913-GR.50 |
| W31 | 6 | 550S162-43 | 1'-7 1/4" | 13.87 | A913-GR.50 |
| | | TOTAL WEIGHT THIS DRAWING | | 101 | |

FRONT VIEW

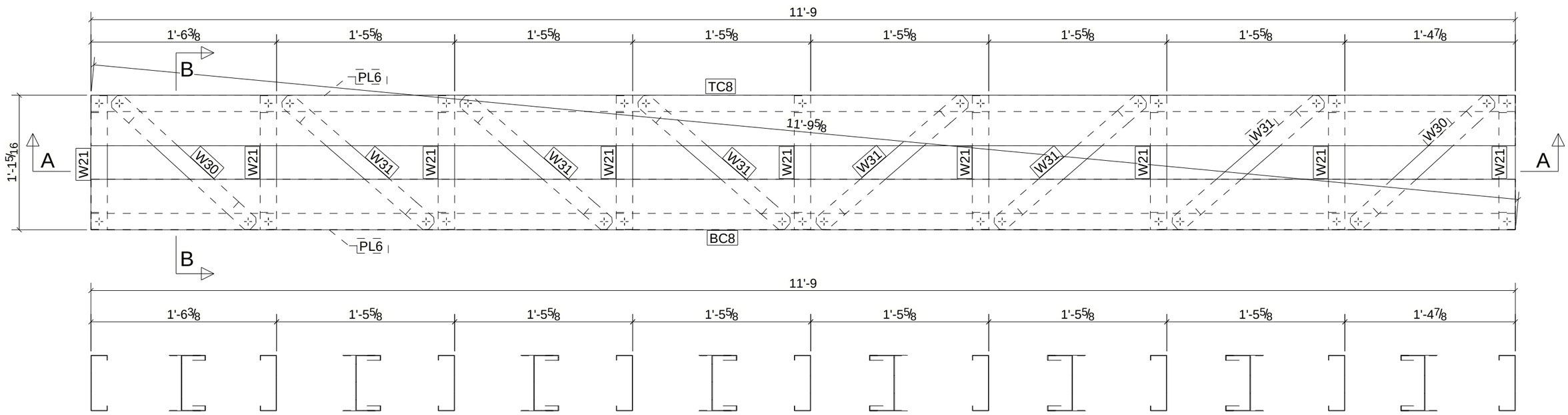


A - A

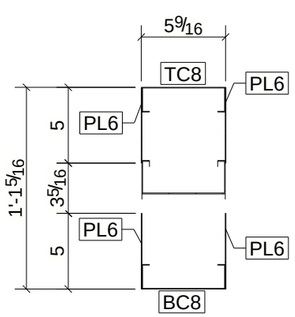


B - B

| REV | DESCRIPTION | DATE |
|---|---|---|
| | | |

| | | | |
|---|---|---|---|
| DESCRIPTION | | | |
| PROJECT NAME | | | |
| DRAWN BY | VN | JOB No. | DRG No. |
| DATE DRAWN | 07/11/2024 | | H1 |

Tekla structures

# BILL OF MATERIAL

| MARK | QTY | DESCRIPTION | LENGTH | WEIGHT | REMARKS |
|---|---|---|---|---|---|
| H2 | 1 | HEADER | | | SQ-2 |
| W21 | 1 | 550S162-43 | 1'-1 1/4" | 1.59 | A913-GR.50 |
| BC7 | 1 | 550S162-43 | 7'-8 3/8" | 11.11 | A913-GR.50 |
| PL10 | 4 | PL0.0430X5.0000 | 7'-8 3/8" | 22.53 | A913-GR.50 |
| TC7 | 1 | 550S162-43 | 7'-8 3/8" | 11.11 | A913-GR.50 |
| W21 | 3 | 550S162-43 | 1'-1 1/4" | 4.77 | A913-GR.50 |
| W27 | 2 | 550S162-43 | 1'-1 1/4" | 3.18 | A913-GR.50 |
| W28 | 4 | 550S162-43 | 1'-7 1/2" | 9.39 | A913-GR.50 |
| W29 | 1 | 550S162-43 | 1'-8 3/16" | 2.43 | A913-GR.50 |
| | | TOTAL WEIGHT THIS DRAWING | | 66 | |

FRONT VIEW

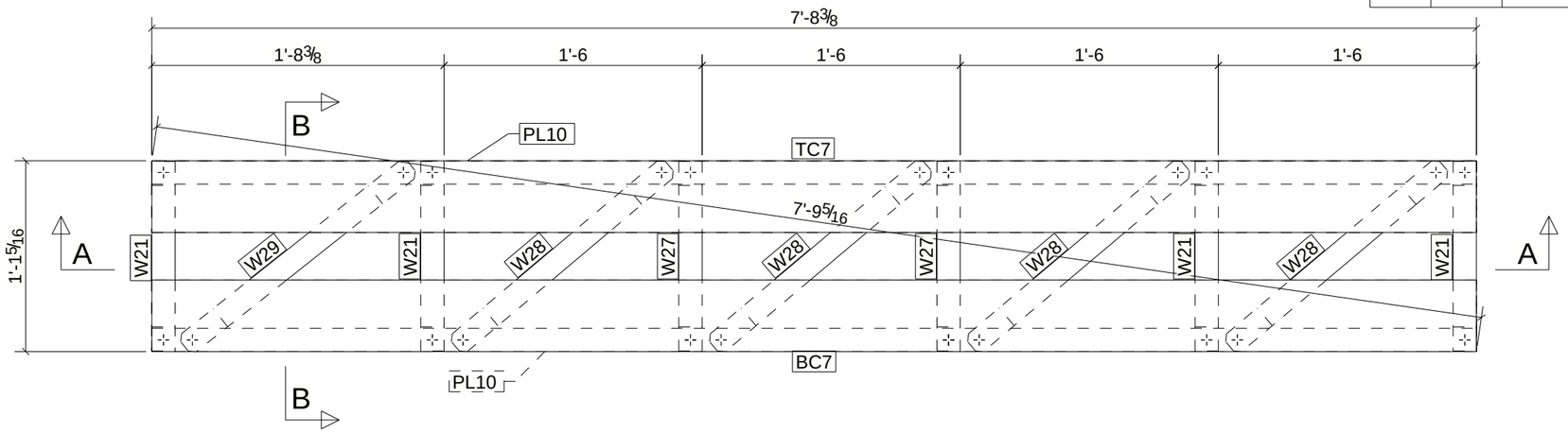


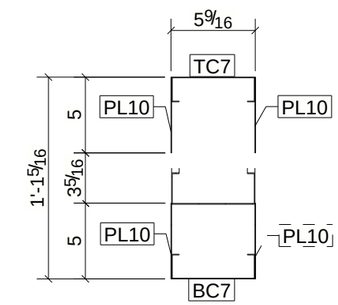


B - B

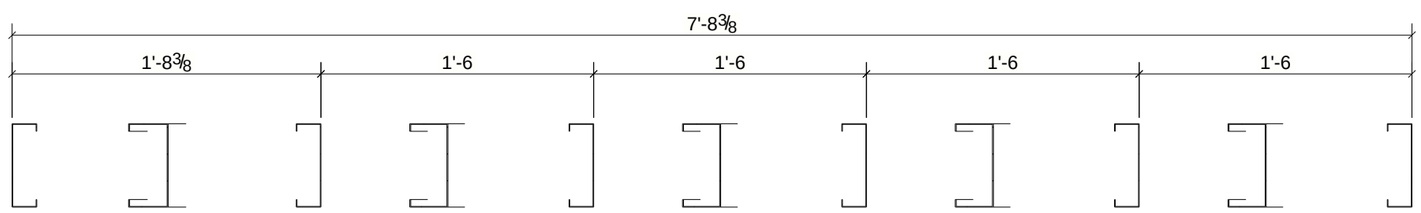


A - A

| REV | DESCRIPTION | DATE |
|---|---|---|
| | | |

| | | | |
|---|---|---|---|
| DESCRIPTION | | | |
| PROJECT NAME | | | |
| DRAWN BY | VN | JOB No. | DRG No. |
| DATE DRAWN | 07/12/2024 | | H2 |

Tekla structures

# BILL OF MATERIAL

| MARK | QTY | DESCRIPTION | LENGTH | WEIGHT | REMARKS |
|---|---|---|---|---|---|
| H3 | 1 | HEADER | | | SQ-2 |
| W21 | 1 | 550S162-43 | 1'-1 1/4" | 1.59 | A913-GR.50 |
| BC6 | 1 | 550S162-43 | 8'-9 1/8" | 12.64 | A913-GR.50 |
| PL7 | 4 | PL0.0430X5.0000 | 8'-9 1/8" | 25.64 | A913-GR.50 |
| TC6 | 1 | 550S162-43 | 8'-9 1/8" | 12.64 | A913-GR.50 |
| W21 | 8 | 550S162-43 | 1'-1 1/4" | 12.72 | A913-GR.50 |
| W22 | 1 | 550S162-43 | 1'-3 9/16" | 1.87 | A913-GR.50 |
| W23 | 1 | 550S162-43 | 1'-4" | 1.92 | A913-GR.50 |
| W24 | 2 | 550S162-43 | 1'-4 7/8" | 4.06 | A913-GR.50 |
| W25 | 3 | 550S162-43 | 1'-3 7/16" | 5.56 | A913-GR.50 |
| W26 | 1 | 550S162-43 | 1'-4 3/8" | 1.97 | A913-GR.50 |
| | | TOTAL WEIGHT THIS DRAWING | | 81 | |

FRONT VIEW

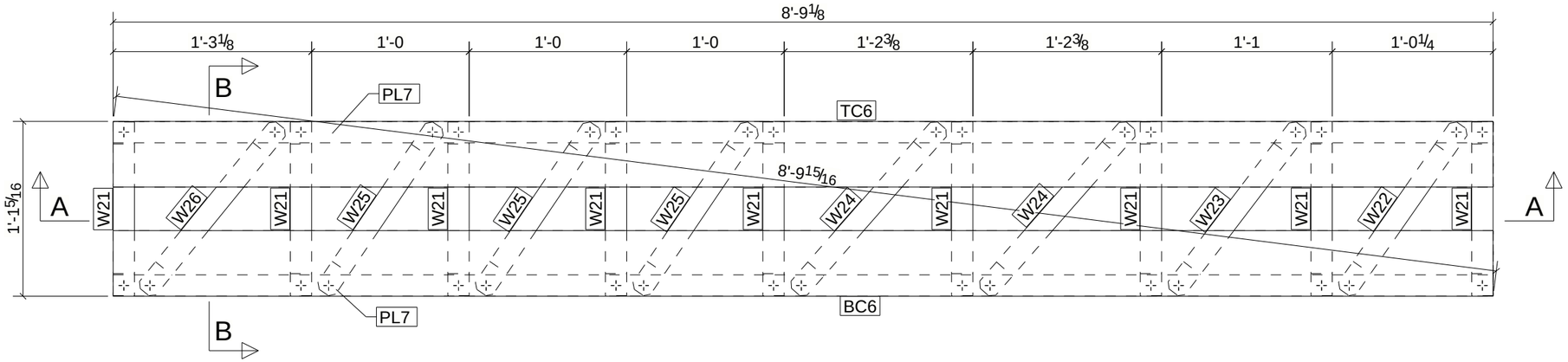


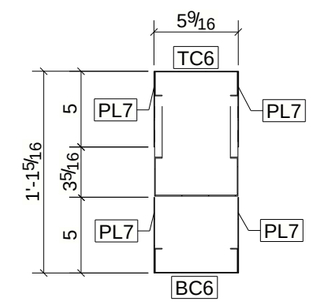


B - B

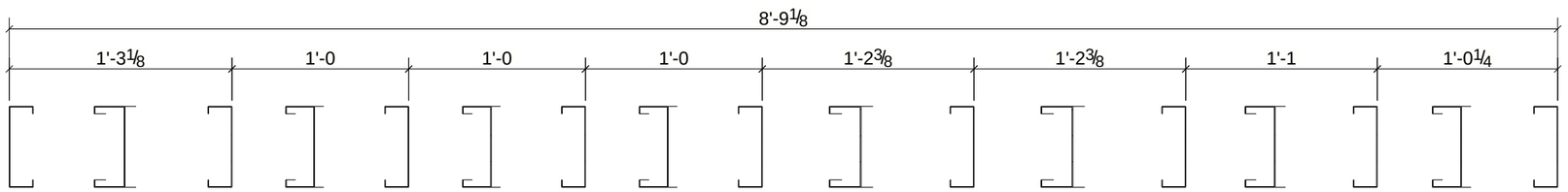


A - A

| REV | DESCRIPTION | DATE |
|---|---|---|
| | | |

| | | | |
|---|---|---|---|
| DESCRIPTION | | | |
| PROJECT NAME | | | |
| DRAWN BY | VN | JOB No. | DRG No. |
| DATE DRAWN | 07/12/2024 | | H3 |

Tekla structures

# BILL OF MATERIAL

| MARK | QTY | DESCRIPTION | LENGTH | WEIGHT | REMARKS |
|---|---|---|---|---|---|
| H4 | 1 | HEADER | | | SQ-2 |
| W10 | 1 | 550S162-43 | 1'-4 7/16" | 1.97 | A913-GR.50 |
| BC3 | 1 | 550S162-43 | 3'-1 3/16" | 4.47 | A913-GR.50 |
| PL9 | 4 | PL0.0430X5.0000 | 3'-1 3/16" | 9.08 | A913-GR.50 |
| TC3 | 1 | 550S162-43 | 3'-1 3/16" | 4.47 | A913-GR.50 |
| W10 | 2 | 550S162-43 | 1'-4 7/16" | 3.95 | A913-GR.50 |
| W14 | 1 | 550S162-43 | 1'-7 5/16" | 2.32 | A913-GR.50 |
| W15 | 1 | 550S162-43 | 2'-0 3/16" | 2.91 | A913-GR.50 |
| | | TOTAL WEIGHT THIS DRAWING | | 29 | |

FRONT VIEW

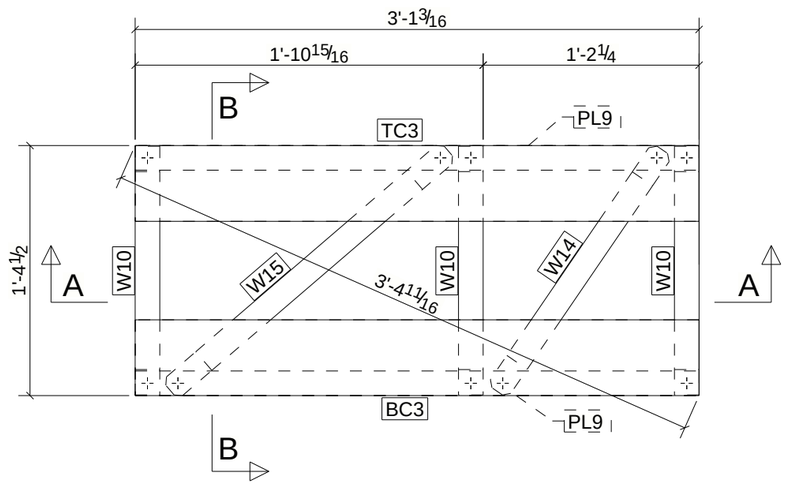


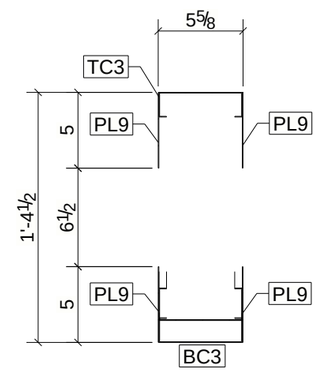


B - B

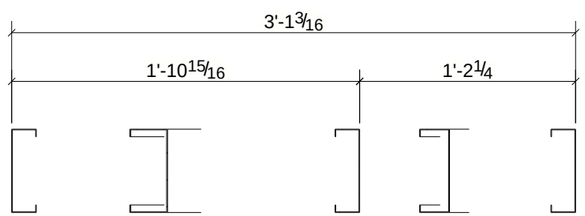


A - A

| REV | DESCRIPTION | DATE |
|---|---|---|
| | | |

| | | | |
|---|---|---|---|
| DESCRIPTION | | | |
| PROJECT NAME | | | |
| DRAWN BY | VN | JOB No. | DRG No. |
| DATE DRAWN | 07/12/2024 | | H4 |

Tekla structures

# BILL OF MATERIAL

| MARK | QTY | DESCRIPTION | LENGTH | WEIGHT | REMARKS |
|---|---|---|---|---|---|
| H5 | 1 | HEADER | | | SQ-2 |
| W4 | 1 | 550S162-43 | 1'-4 15/16" | 2.03 | A913-GR.50 |
| BC5 | 1 | 550S162-43 | 10'-10 15*** | 15.74 | A913-GR.50 |
| PL4 | 4 | PL0.0430X5.0000 | 10'-10 7/8" | 31.93 | A913-GR.50 |
| TC5 | 1 | 550S162-43 | 10'-10 15*** | 15.74 | A913-GR.50 |
| W4 | 8 | 550S162-43 | 1'-4 15/16" | 16.27 | A913-GR.50 |
| W17 | 1 | 550S162-43 | 1'-8 3/8" | 2.45 | A913-GR.50 |
| W18 | 6 | 550S162-43 | 1'-8 13/16" | 15.02 | A913-GR.50 |
| W19 | 1 | 550S162-43 | 1'-9 9/16" | 2.59 | A913-GR.50 |
| | | TOTAL WEIGHT THIS DRAWING | | 102 | |

FRONT VIEW

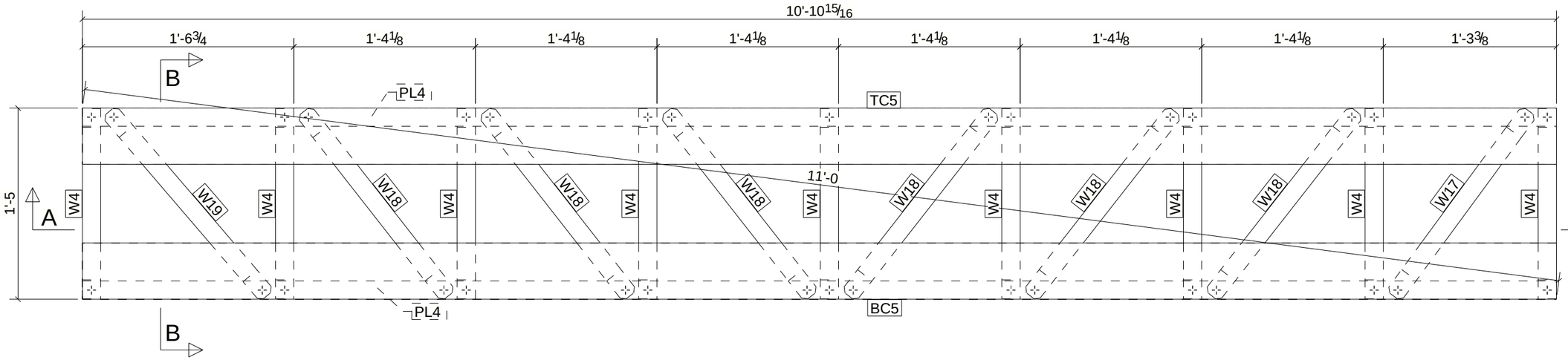


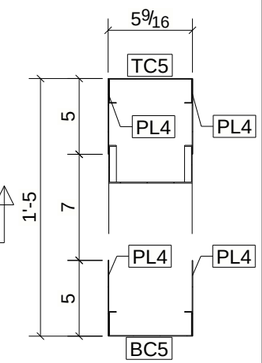


B - B

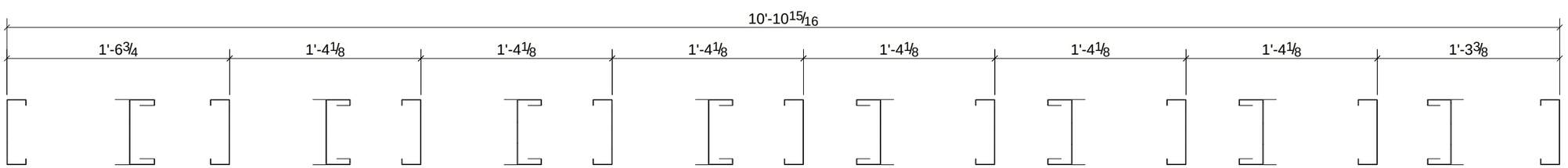


A - A

| REV | DESCRIPTION | DATE |
|---|---|---|
| | | |

| | | | |
|---|---|---|---|
| DESCRIPTION | | | |
| PROJECT NAME | | | |
| DRAWN BY | VN | JOB No. | DRG No. |
| DATE DRAWN | 07/12/2024 | | H5 |

Tekla structures

# BILL OF MATERIAL

| MARK | QTY | DESCRIPTION | LENGTH | WEIGHT | REMARKS |
|---|---|---|---|---|---|
| H6 | 1 | HEADER | | | SQ-2 |
| W10 | 1 | 550S162-43 | 1'-4 7/16" | 1.97 | A913-GR.50 |
| BC2 | 1 | 550S162-43 | 5'-7 1/4" | 8.09 | A913-GR.50 |
| PL8 | 4 | PL0.0430X5.0000 | 5'-7 1/4" | 16.41 | A913-GR.50 |
| TC2 | 1 | 550S162-43 | 5'-7 1/4" | 8.09 | A913-GR.50 |
| W10 | 3 | 550S162-43 | 1'-4 7/16" | 5.92 | A913-GR.50 |
| W11 | 1 | 550S162-43 | 1'-11 15/16" | 2.88 | A913-GR.50 |
| W12 | 1 | 550S162-43 | 2'-1 15/16" | 3.12 | A913-GR.50 |
| W13 | 1 | 550S162-43 | 1'-11 1/8" | 2.78 | A913-GR.50 |
| | | TOTAL WEIGHT THIS DRAWING | | 49 | |

FRONT VIEW

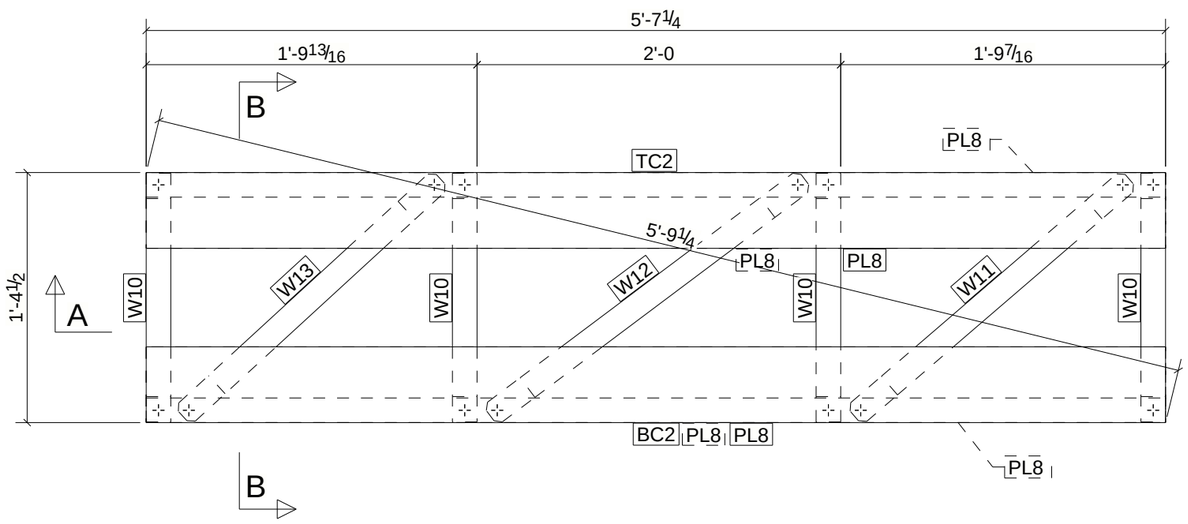


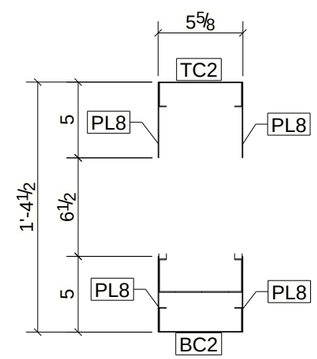


B - B

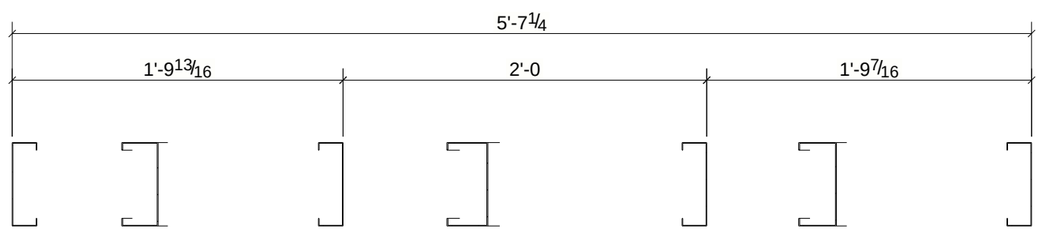


A - A

| REV | DESCRIPTION | DATE |
|---|---|---|
| | | |

| | | | |
|---|---|---|---|
| DESCRIPTION | | | |
| PROJECT NAME | | | |
| DRAWN BY | VN | JOB No. | DRG No. |
| DATE DRAWN | 07/12/2024 | | H6 |

Tekla structures

# BILL OF MATERIAL

| MARK | QTY | DESCRIPTION | LENGTH | WEIGHT | REMARKS |
|---|---|---|---|---|---|
| H7 | 1 | HEADER | | | SQ-2 |
| W4 | 1 | 550S162-43 | 1'-4 15/16" | 2.03 | A913-GR.50 |
| BC4 | 1 | 550S162-43 | 11'-0" | 15.88 | A913-GR.50 |
| PL2 | 4 | PL0.0430X5.0000 | 11'-0" | 32.20 | A913-GR.50 |
| TC4 | 1 | 550S162-43 | 11'-0" | 15.88 | A913-GR.50 |
| W4 | 8 | 550S162-43 | 1'-4 15/16" | 16.27 | A913-GR.50 |
| W6 | 2 | 550S162-43 | 1'-8 9/16" | 4.95 | A913-GR.50 |
| W16 | 6 | 550S162-43 | 1'-9 1/16" | 15.19 | A913-GR.50 |
| | | TOTAL WEIGHT THIS DRAWING | | 102 | |

FRONT VIEW

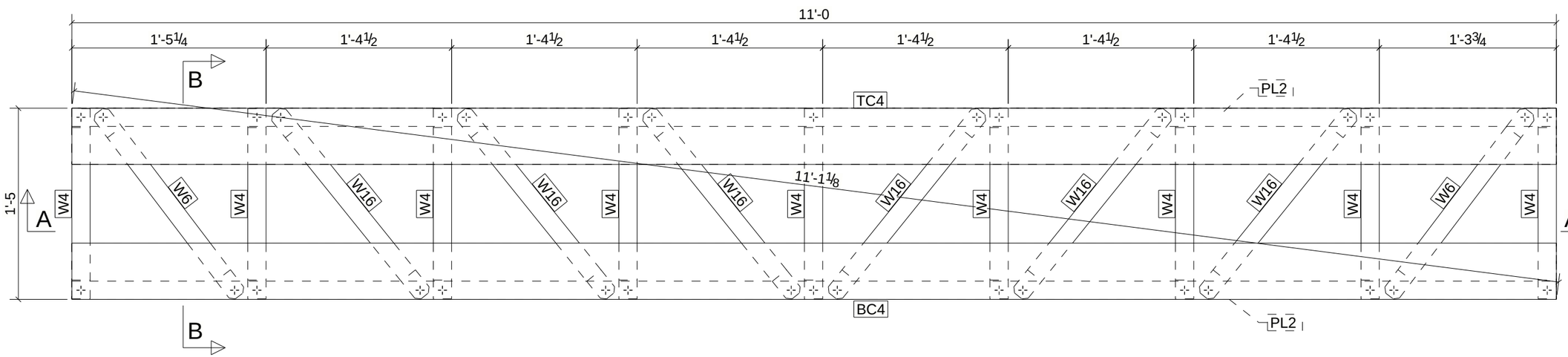


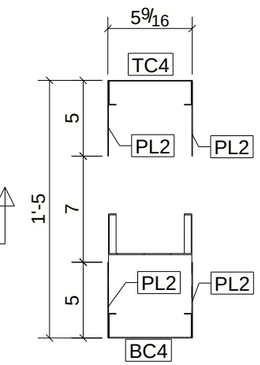


B - B

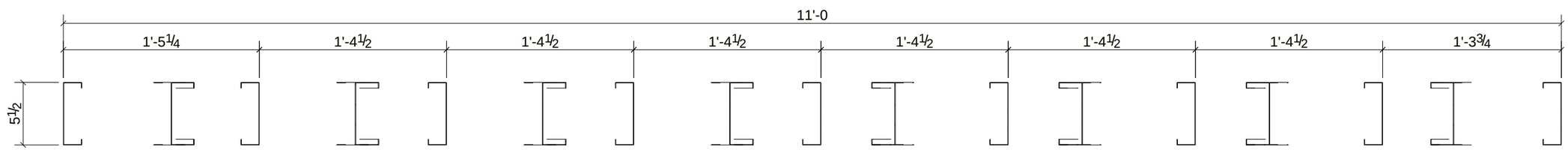


A - A

| REV | DESCRIPTION | DATE |
|---|---|---|
| | | |

| | | | |
|---|---|---|---|
| DESCRIPTION | | | |
| PROJECT NAME | | | |
| DRAWN BY | VN | JOB No. | DRG No. |
| DATE DRAWN | 07/12/2024 | | H7 |

Tekla structures

# BILL OF MATERIAL

| MARK | QTY | DESCRIPTION | LENGTH | WEIGHT | REMARKS |
|---|---|---|---|---|---|
| H8 | 1 | HEADER | | | SQ-2 |
| W4 | 1 | 550S162-43 | 1'-4 15/16" | 2.03 | A913-GR.50 |
| BC1 | 1 | 550S162-43 | 10'-6" | 15.15 | A913-GR.50 |
| PL3 | 4 | PL0.0430X5.0000 | 10'-6" | 30.73 | A913-GR.50 |
| TC1 | 1 | 550S162-43 | 10'-6" | 15.15 | A913-GR.50 |
| W4 | 8 | 550S162-43 | 1'-4 15/16" | 16.27 | A913-GR.50 |
| W5 | 2 | 550S162-43 | 1'-8 1/8" | 4.84 | A913-GR.50 |
| W6 | 6 | 550S162-43 | 1'-8 9/16" | 14.85 | A913-GR.50 |
| | | TOTAL WEIGHT THIS DRAWING | | 99 | |

FRONT VIEW

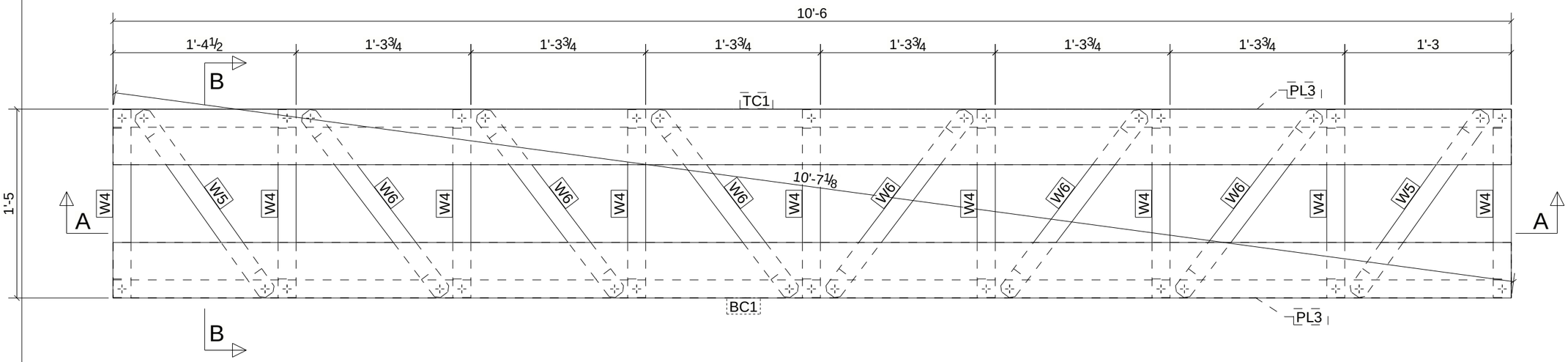


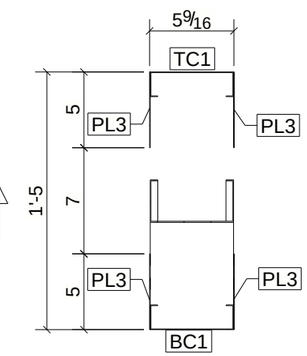


B - B

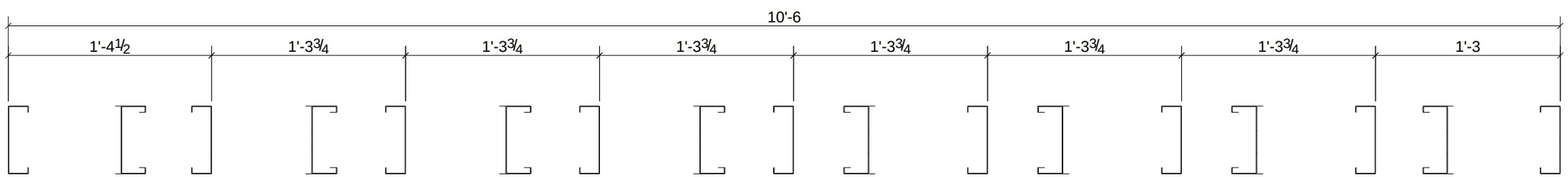


A - A

| REV | DESCRIPTION | DATE |
|---|---|---|
| | | |

| | | | |
|---|---|---|---|
| DESCRIPTION | | | |
| PROJECT NAME | | | |
| DRAWN BY | VN | JOB No. | DRG No. |
| DATE DRAWN | 07/12/2024 | | H8 |

Tekla structures

# BILL OF MATERIAL

| MARK | QTY | DESCRIPTION | LENGTH | WEIGHT | REMARKS |
|---|---|---|---|---|---|
| H9 | 1 | HEADER | | | SQ-2 |
| W37 | 1 | 550S162-43 | 1'-10 1/16" | 2.65 | A913-GR.50 |
| BC10 | 1 | 550S162-43 | 8'-9 3/8" | 12.67 | A913-GR.50 |
| PL5 | 4 | PL0.0430X5.0000 | 8'-9 3/8" | 25.70 | A913-GR.50 |
| TC10 | 1 | 550S162-43 | 8'-9 3/8" | 12.67 | A913-GR.50 |
| W37 | 6 | 550S162-43 | 1'-10 1/16" | 15.90 | A913-GR.50 |
| W38 | 1 | 550S162-43 | 2'-1 5/16" | 3.04 | A913-GR.50 |
| W39 | 4 | 550S162-43 | 2'-1 11/16" | 12.36 | A913-GR.50 |
| W40 | 1 | 550S162-43 | 2'-2 1/16" | 3.13 | A913-GR.50 |
| | | TOTAL WEIGHT THIS DRAWING | | 88 | |

FRONT VIEW

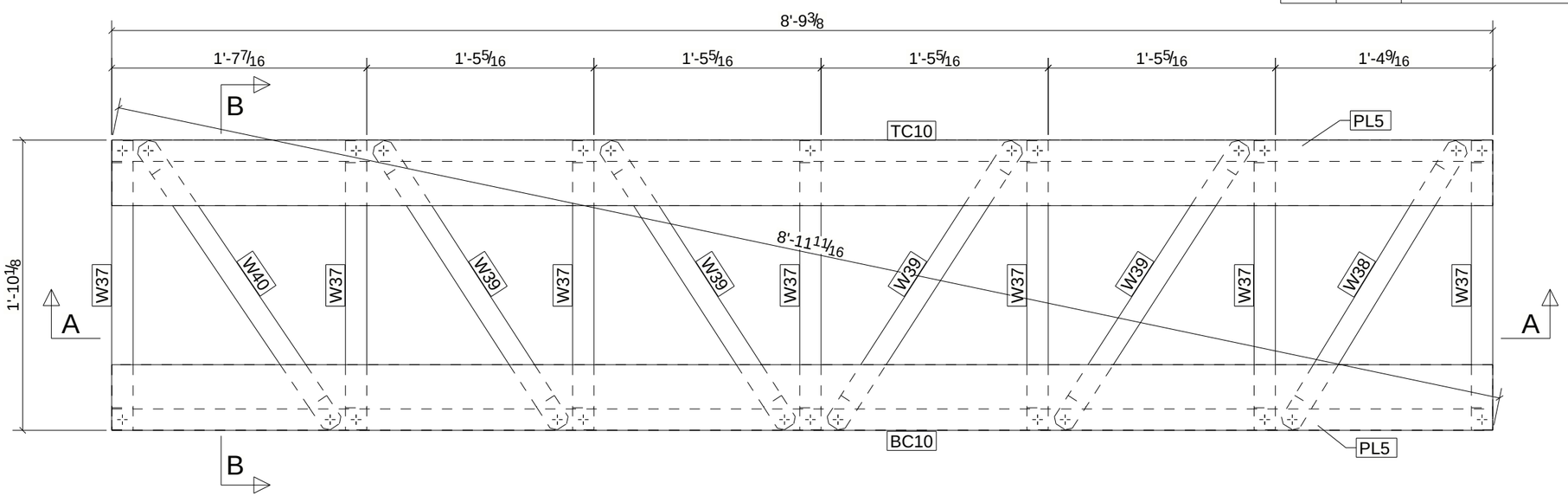


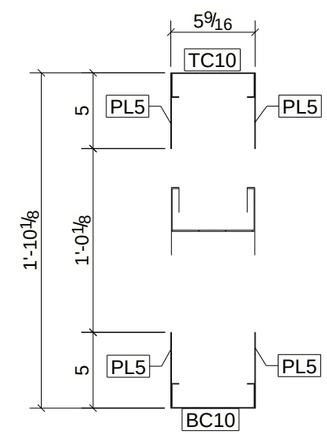


B - B

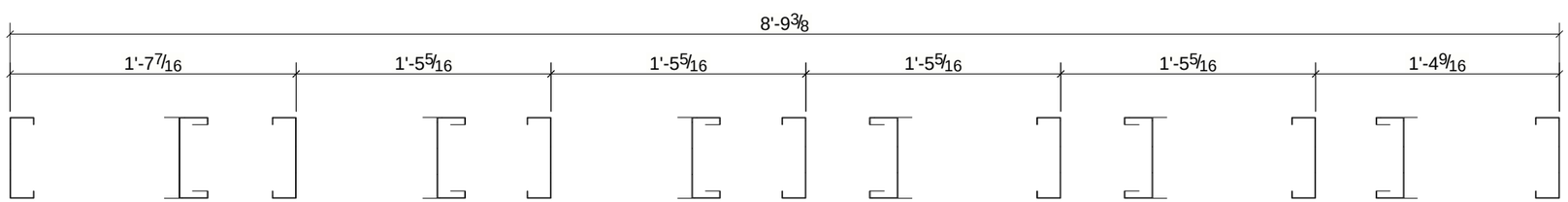


A - A

| REV | DESCRIPTION | DATE |
|---|---|---|
| | | |

| | | | |
|---|---|---|---|
| DESCRIPTION | | | |
| PROJECT NAME | | | |
| DRAWN BY | VN | JOB No. | DRG No. |
| DATE DRAWN | 07/12/2024 | | H9 |

Tekla structures

# BILL OF MATERIAL

| MARK | QTY | DESCRIPTION | LENGTH | WEIGHT | REMARKS |
|---|---|---|---|---|---|
| H10 | 2 | HEADERS | | | SQ-2 |
| W65 | 2 | 550S162-43 | 1'-5 9/16" | 4.22 | A913-GR.50 |
| BC17 | 2 | 550S162-43 | 18'-9 1/2" | 54.23 | A913-GR.50 |
| FL2 | 4 | 550S162-43 | 18'-9 1/2" | 108.46 | A913-GR.50 |
| PL1 | 8 | PL0.0430X5.0000 | 18'-9 1/2" | 110.00 | A913-GR.50 |
| TC16 | 2 | 550S162-43 | 18'-9 1/2" | 54.23 | A913-GR.50 |
| W1 | 4 | 550S162-43 | 18'-9 1/2" | 108.46 | A913-GR.50 |
| W2 | 4 | 550S162-43 | 2'-0 11/16" | 11.87 | A913-GR.50 |
| W7 | 4 | 550S162-43 | 1'-11 9/16" | 11.32 | A913-GR.50 |
| W65 | 20 | 550S162-43 | 1'-5 9/16" | 42.18 | A913-GR.50 |
| W66 | 16 | 550S162-43 | 2'-1 5/8" | 49.25 | A913-GR.50 |
| | | TOTAL WEIGHT THIS DRAWING | | 554 | |

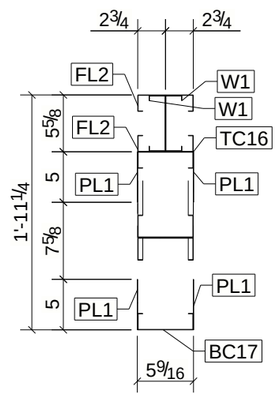


B - B

FRONT VIEW

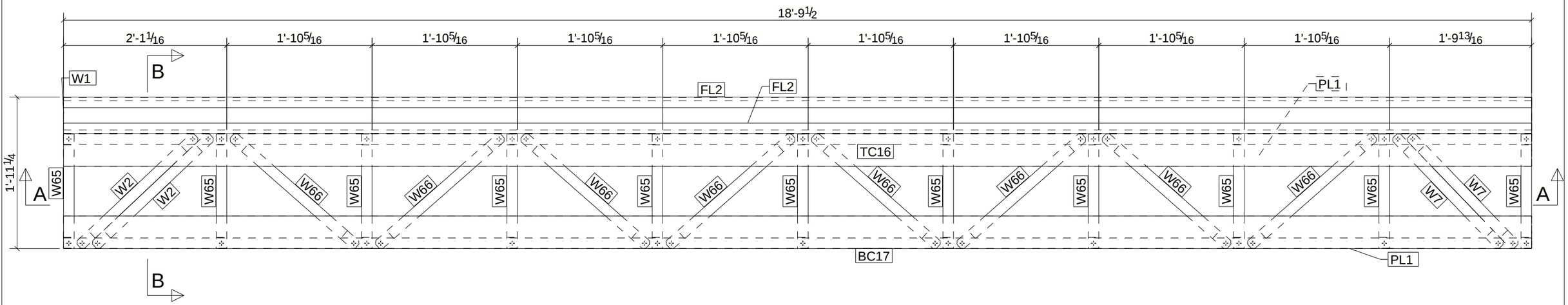


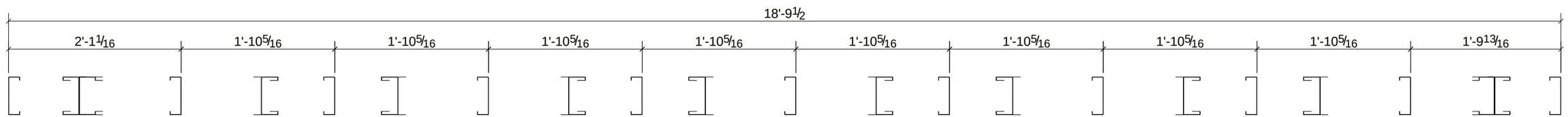


A - A

| REV | DESCRIPTION | DATE |
|---|---|---|
| | | |

| | | | |
|---|---|---|---|
| DESCRIPTION | | | |
| PROJECT NAME | | | |
| DRAWN BY | VN | JOB No. | DRG No. |
| DATE DRAWN | 07/12/2024 | | H10 |

Tekla structures

# BILL OF MATERIAL

| MARK | QTY | DESCRIPTION | LENGTH | WEIGHT | REMARKS |
|---|---|---|---|---|---|
| L1 | 1 | LOAD BEARNING WALL | | | SQ-2 |
| S70 | 1 | 550S162-43 | 0'-8 1/2" | 1.02 | A913-GR.50 |
| BT137 | 1 | 550S162-43 | 11'-3" | 16.23 | A913-GR.50 |
| S70 | 8 | 550S162-43 | 0'-8 1/2" | 8.15 | A913-GR.50 |
| TT20 | 1 | 550S162-43 | 11'-3" | 16.23 | A913-GR.50 |
| | | TOTAL WEIGHT THIS DRAWING | | 42 | |

FRONT VIEW

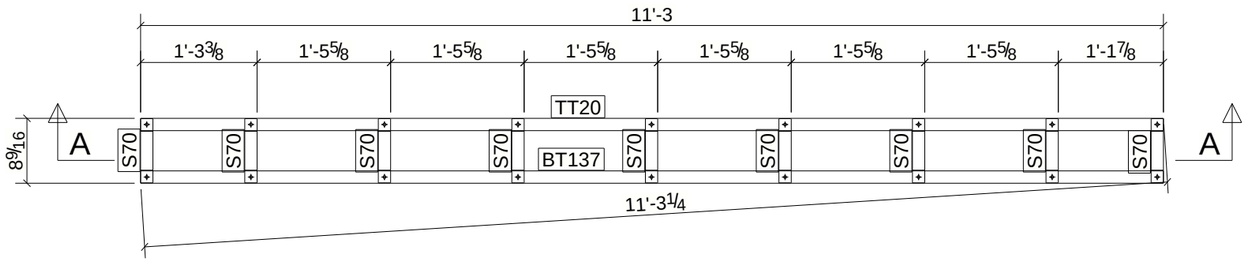


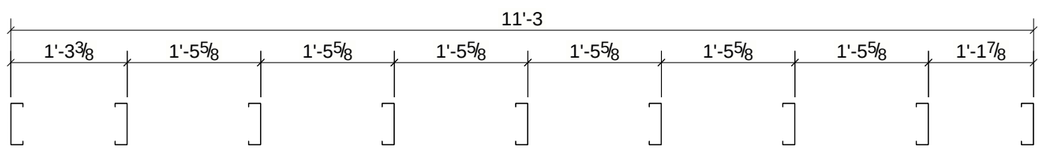


A - A

| REV | DESCRIPTION | DATE |
|---|---|---|
| | | |

| | | | |
|---|---|---|---|
| DESCRIPTION | | | |
| PROJECT NAME | | | |
| DRAWN BY | VN | JOB No. | DRG No. |
| DATE DRAWN | 07/09/2024 | | L1 |

Tekla structures

FRONT VIEW

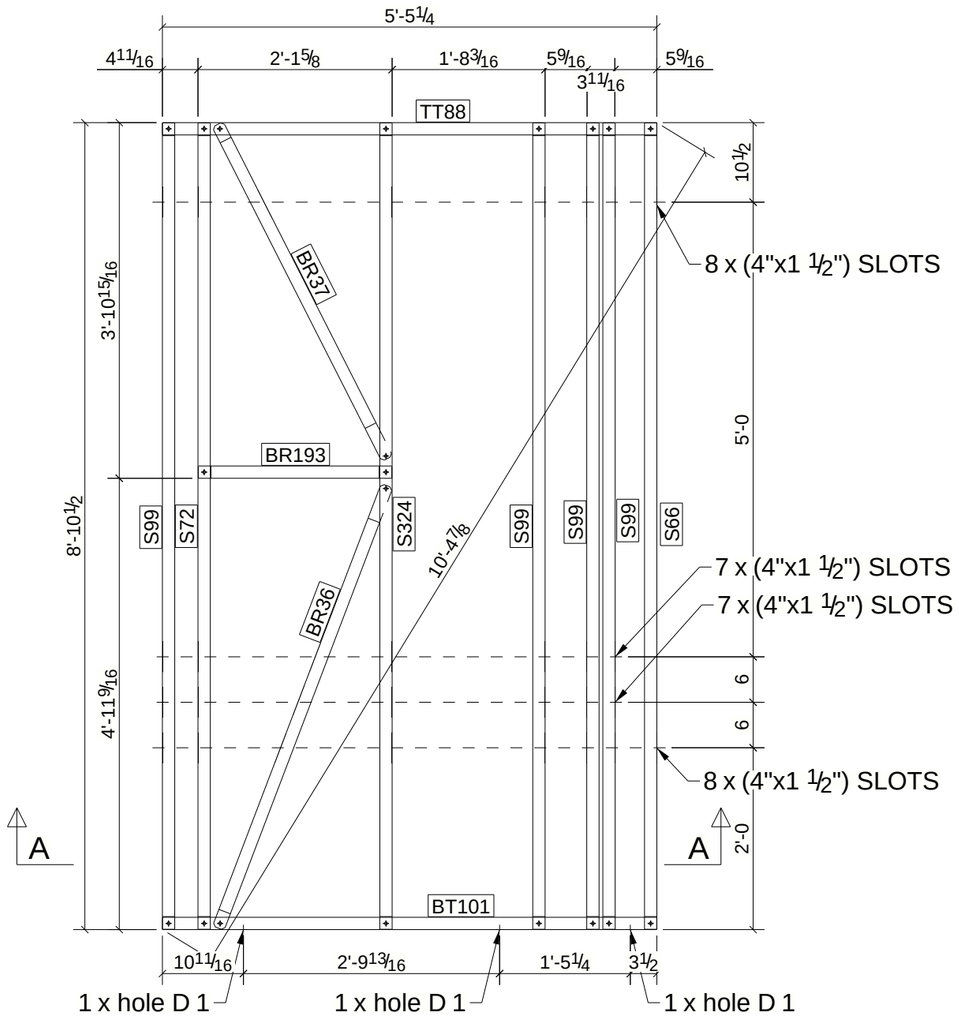


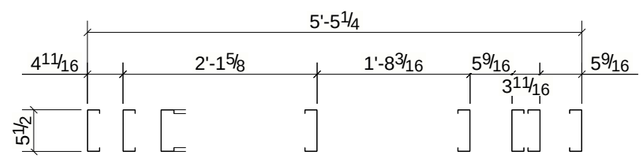


A - A

# BILL OF MATERIAL

| MARK | QTY | DESCRIPTION | LENGTH | WEIGHT | REMARKS |
|---|---|---|---|---|---|
| L2 | 1 | LOAD BEARNING WALL | | | SQ-2 |
| S66 | 1 | 550S162-43 | 8'-10 7/16" | 12.80 | A913-GR.50 |
| BR36 | 1 | 550S162-43 | 5'-2 1/2" | 7.51 | A913-GR.50 |
| BR37 | 1 | 550S162-43 | 4'-1 7/16" | 5.95 | A913-GR.50 |
| BR193 | 1 | 550S162-43 | 2'-1 9/16" | 3.07 | A913-GR.50 |
| BT101 | 1 | 550S162-43 | 5'-5 1/4" | 7.85 | A913-GR.50 |
| S72 | 1 | 550S162-43 | 8'-10 7/16" | 12.80 | A913-GR.50 |
| S99 | 4 | 550S162-43 | 8'-10 7/16" | 51.18 | A913-GR.50 |
| S324 | 1 | 550S162-43 | 8'-10 7/16" | 12.80 | A913-GR.50 |
| TT88 | 1 | 550S162-43 | 5'-5 1/4" | 7.85 | A913-GR.50 |
| | | TOTAL WEIGHT THIS DRAWING | | 122 | |

| REV | DESCRIPTION | DATE |
|---|---|---|
| | | |

| | | | |
|---|---|---|---|
| DESCRIPTION | | | |
| PROJECT NAME | | | |
| DRAWN BY | VN | JOB No. | DRG No. |
| DATE DRAWN | 07/19/2024 | | L2 |

Tekla structures

FRONT VIEW

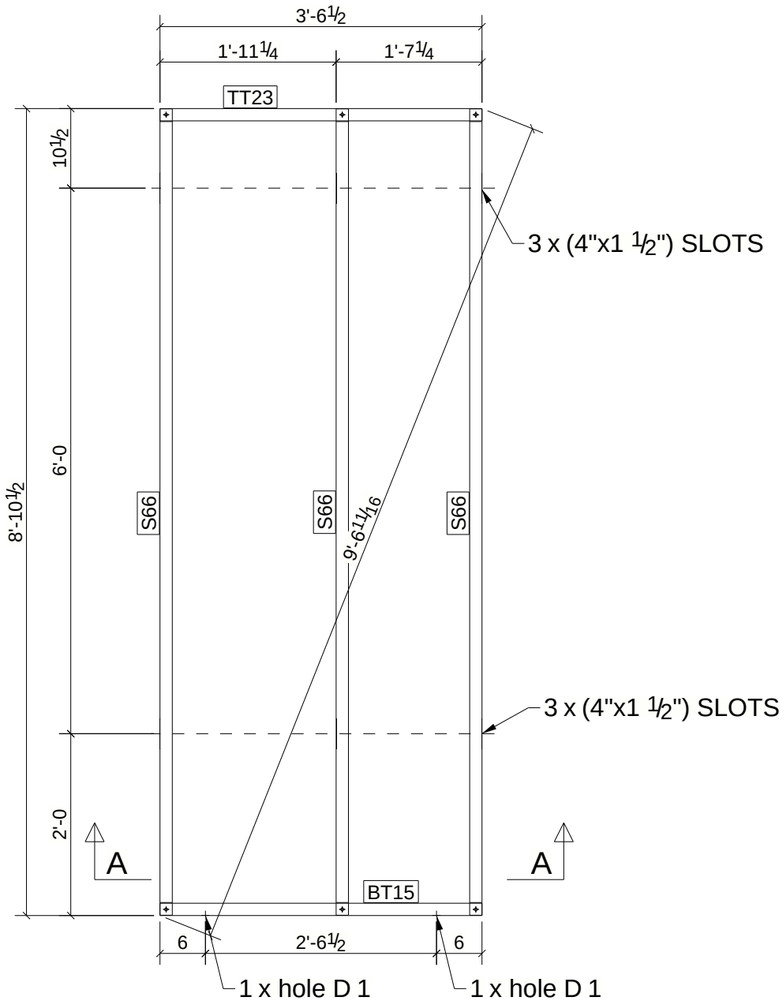


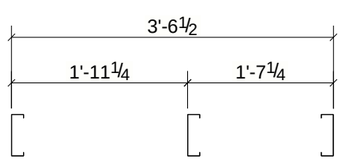


A - A

# BILL OF MATERIAL

| MARK | QTY | DESCRIPTION | LENGTH | WEIGHT | REMARKS |
|---|---|---|---|---|---|
| L3 | 2 | LOAD BEARNING WALLS | | | SQ-2 |
| S66 | 2 | 550S162-43 | 8'-10 7/16" | 25.59 | A913-GR.50 |
| BT15 | 2 | 550S162-43 | 3'-6 1/2" | 10.22 | A913-GR.50 |
| S66 | 4 | 550S162-43 | 8'-10 7/16" | 51.18 | A913-GR.50 |
| TT23 | 2 | 550S162-43 | 3'-6 1/2" | 10.22 | A913-GR.50 |
| | | TOTAL WEIGHT THIS DRAWING | | 97 | |

| REV | DESCRIPTION | DATE |
|---|---|---|
| | | |

| | | | |
|---|---|---|---|
| DESCRIPTION | | | |
| PROJECT NAME | | | |
| DRAWN BY | VN | JOB No. | DRG No. |
| DATE DRAWN | 07/19/2024 | | L3 |

Tekla structures

FRONT VIEW

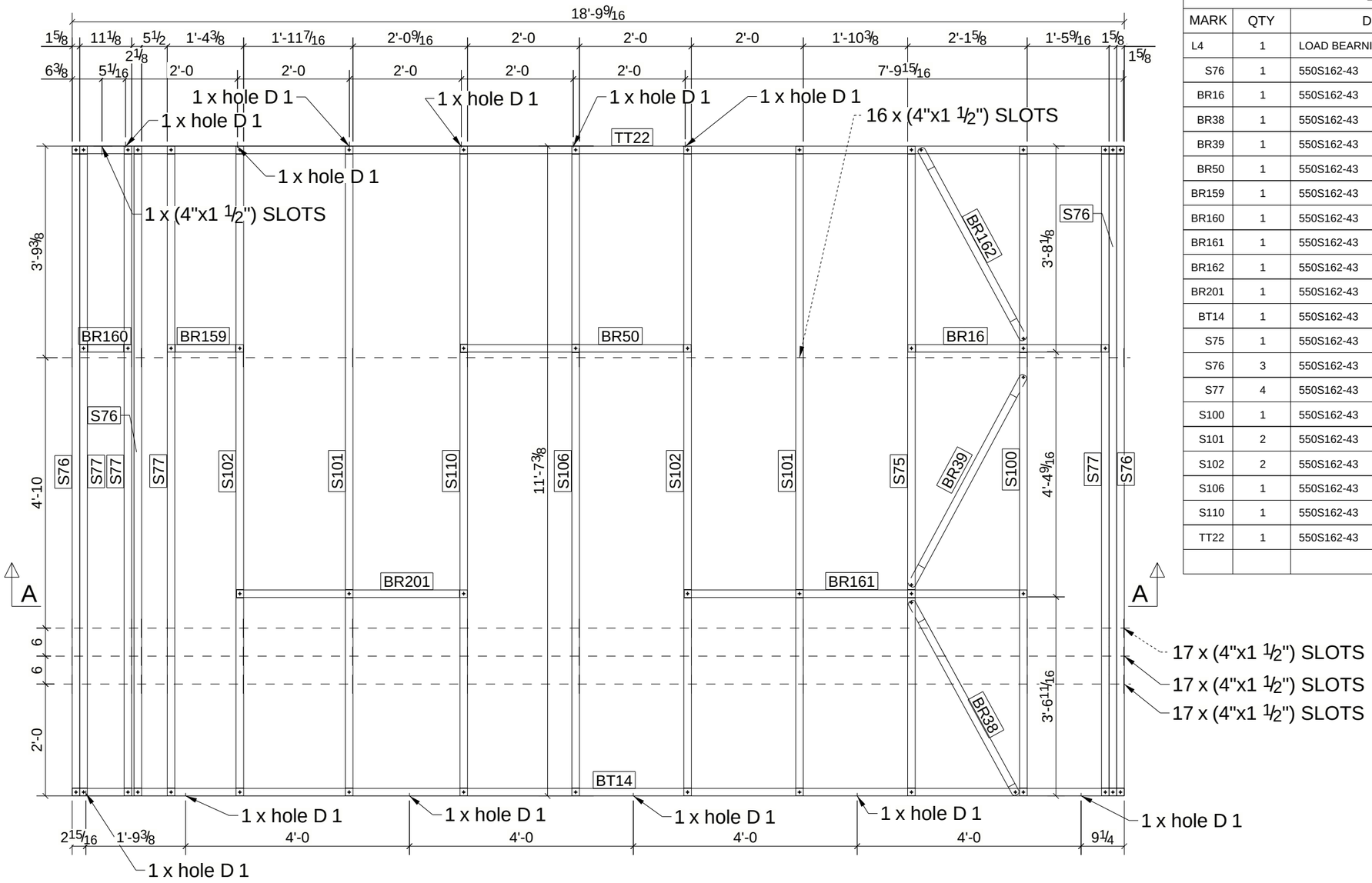


# BILL OF MATERIAL

| MARK | QTY | DESCRIPTION | LENGTH | WEIGHT | REMARKS |
|---|---|---|---|---|---|
| L4 | 1 | LOAD BEARNING WALL | | | SQ-2 |
| S76 | 1 | 550S162-43 | 11'-7 5/16" | 16.75 | A913-GR.50 |
| BR16 | 1 | 550S162-43 | 3'-7 1/8" | 5.18 | A913-GR.50 |
| BR38 | 1 | 550S162-43 | 3'-11 3/8" | 5.70 | A913-GR.50 |
| BR39 | 1 | 550S162-43 | 4'-3 7/16" | 6.18 | A913-GR.50 |
| BR50 | 1 | 550S162-43 | 4'-1 7/16" | 5.95 | A913-GR.50 |
| BR159 | 1 | 550S162-43 | 1'-4 5/16" | 1.96 | A913-GR.50 |
| BR160 | 1 | 550S162-43 | 0'-11 1/16" | 1.33 | A913-GR.50 |
| BR161 | 1 | 550S162-43 | 6'-1 7/16" | 8.83 | A913-GR.50 |
| BR162 | 1 | 550S162-43 | 3'-10 3/4" | 5.62 | A913-GR.50 |
| BR201 | 1 | 550S162-43 | 4'-1 7/16" | 5.95 | A913-GR.50 |
| BT14 | 1 | 550S162-43 | 18'-9 9/16" | 27.12 | A913-GR.50 |
| S75 | 1 | 550S162-43 | 11'-7 5/16" | 16.75 | A913-GR.50 |
| S76 | 3 | 550S162-43 | 11'-7 5/16" | 50.25 | A913-GR.50 |
| S77 | 4 | 550S162-43 | 11'-7 5/16" | 67.00 | A913-GR.50 |
| S100 | 1 | 550S162-43 | 11'-7 5/16" | 16.75 | A913-GR.50 |
| S101 | 2 | 550S162-43 | 11'-7 5/16" | 33.50 | A913-GR.50 |
| S102 | 2 | 550S162-43 | 11'-7 5/16" | 33.50 | A913-GR.50 |
| S106 | 1 | 550S162-43 | 11'-7 5/16" | 16.75 | A913-GR.50 |
| S110 | 1 | 550S162-43 | 11'-7 5/16" | 16.75 | A913-GR.50 |
| TT22 | 1 | 550S162-43 | 18'-9 9/16" | 27.12 | A913-GR.50 |
| | | TOTAL WEIGHT THIS DRAWING | | 369 | |

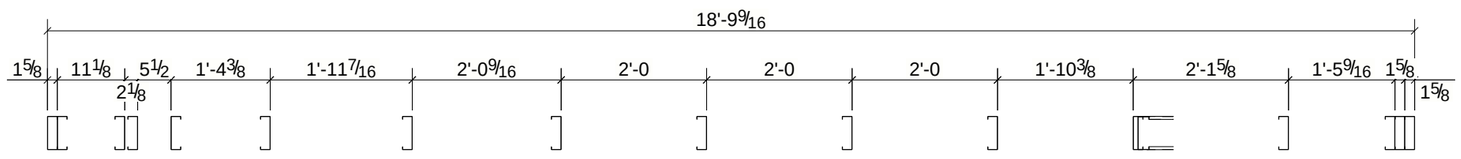


A - A

| REV | DESCRIPTION | DATE |
|---|---|---|
| | | |

| | | | |
|---|---|---|---|
| DESCRIPTION | | | |
| PROJECT NAME | | | |
| DRAWN BY | VN | JOB No. | DRG No. |
| DATE DRAWN | 07/19/2024 | | L4 |

Tekla structures

FRONT VIEW

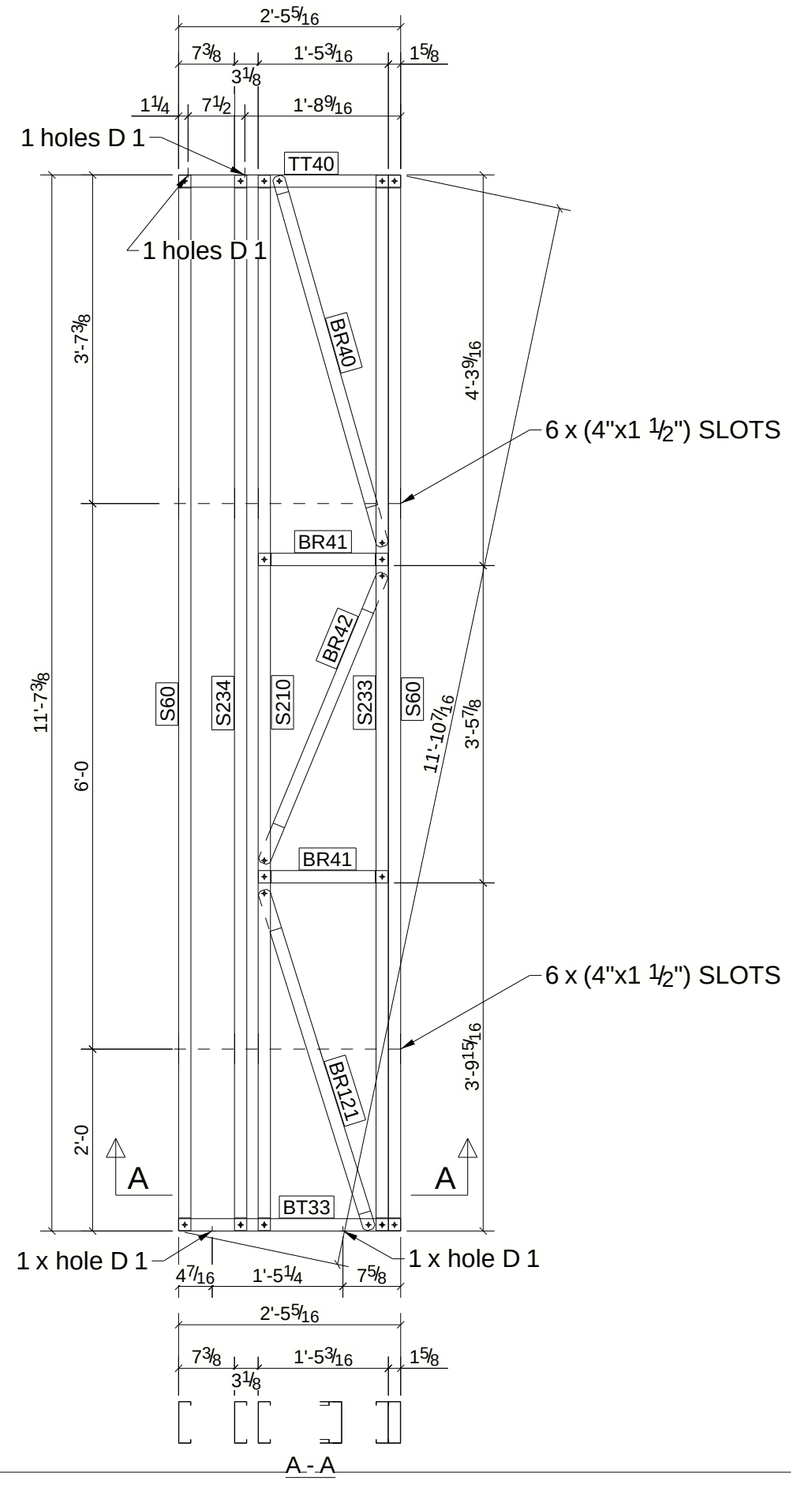


A - A

# BILL OF MATERIAL

| MARK | QTY | DESCRIPTION | LENGTH | WEIGHT | REMARKS |
|---|---|---|---|---|---|
| L5 | 1 | LOAD BEARNING WALL | | | SQ-2 |
| S60 | 1 | 550S162-43 | 11'-7 5/16" | 16.75 | A913-GR.50 |
| BR40 | 1 | 550S162-43 | 4'-2 13/16" | 6.11 | A913-GR.50 |
| BR41 | 2 | 550S162-43 | 1'-5 1/8" | 4.11 | A913-GR.50 |
| BR42 | 1 | 550S162-43 | 3'-5 3/8" | 4.98 | A913-GR.50 |
| BR121 | 1 | 550S162-43 | 3'-10 15/16" | 5.65 | A913-GR.50 |
| BT33 | 1 | 550S162-43 | 2'-5 5/16" | 3.52 | A913-GR.50 |
| S60 | 1 | 550S162-43 | 11'-7 5/16" | 16.75 | A913-GR.50 |
| S210 | 1 | 550S162-43 | 11'-7 5/16" | 16.75 | A913-GR.50 |
| S233 | 1 | 550S162-43 | 11'-7 5/16" | 16.75 | A913-GR.50 |
| S234 | 1 | 550S162-43 | 11'-7 5/16" | 16.75 | A913-GR.50 |
| TT40 | 1 | 550S162-43 | 2'-5 5/16" | 3.52 | A913-GR.50 |
| | | TOTAL WEIGHT THIS DRAWING | | 112 | |

| REV | DESCRIPTION | DATE |
|---|---|---|
| | | |

| | | | |
|---|---|---|---|
| DESCRIPTION | | | |
| PROJECT NAME | | | |
| DRAWN BY | VN | JOB No. | DRG No. |
| DATE DRAWN | 07/19/2024 | | L5 |

Tekla structures

FRONT VIEW

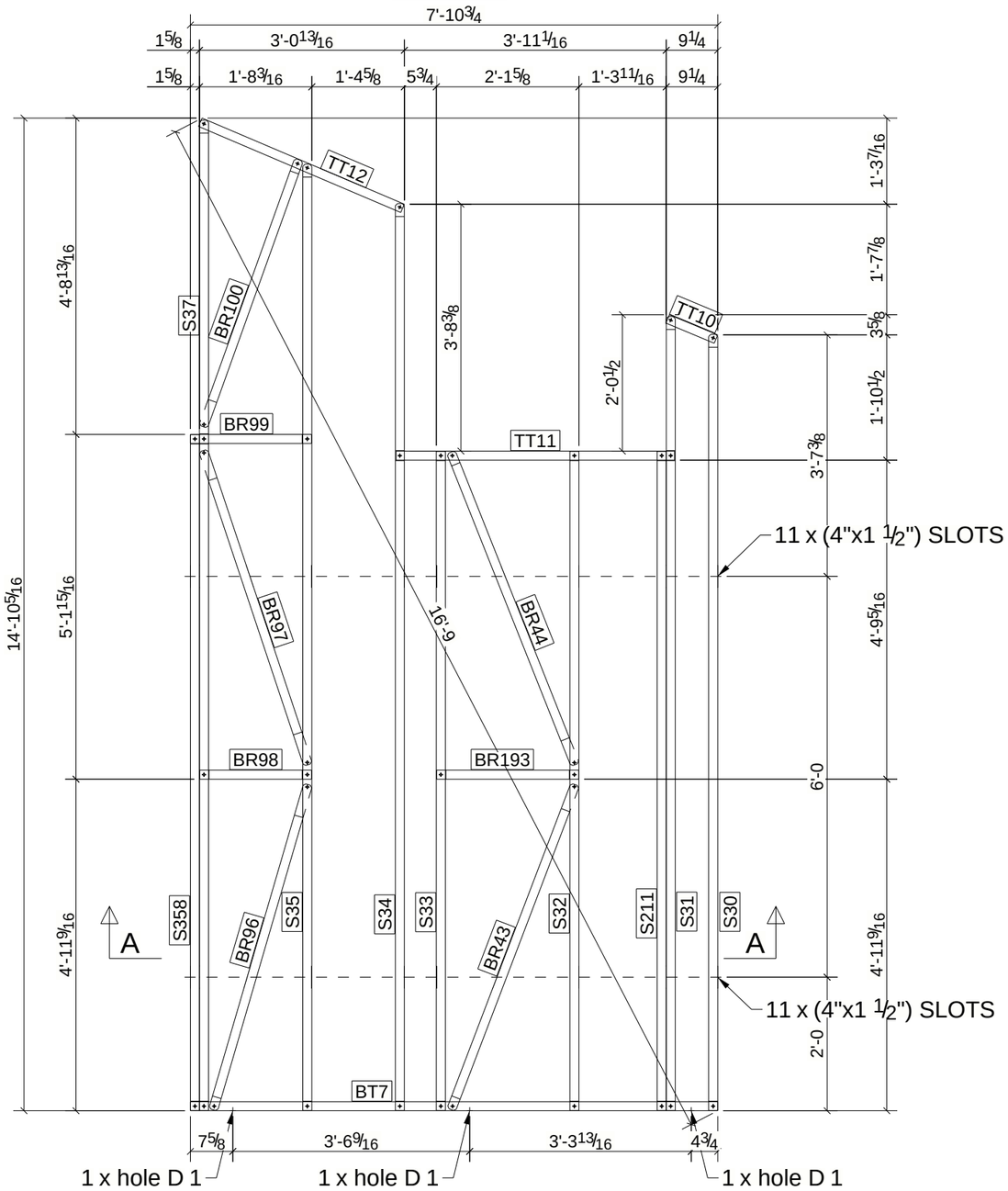


A - A

# BILL OF MATERIAL

| MARK | QTY | DESCRIPTION | LENGTH | WEIGHT | REMARKS |
|---|---|---|---|---|---|
| L6 | 1 | LOAD BEARNING WALL | | | SQ-2 |
| S34 | 1 | 550S162-43 | 13'-6 15/16" | 19.59 | A913-GR.50 |
| BR43 | 1 | 550S162-43 | 5'-2 1/2" | 7.51 | A913-GR.50 |
| BR44 | 1 | 550S162-43 | 5'-0 3/8" | 7.26 | A913-GR.50 |
| BR96 | 1 | 550S162-43 | 5'-0 7/8" | 7.32 | A913-GR.50 |
| BR97 | 1 | 550S162-43 | 4'-11 1/2" | 7.15 | A913-GR.50 |
| BR98 | 1 | 550S162-43 | 1'-8 1/8" | 2.42 | A913-GR.50 |
| BR99 | 1 | 550S162-43 | 1'-9 3/4" | 2.62 | A913-GR.50 |
| BR100 | 1 | 550S162-43 | 4'-2 15/16" | 6.13 | A913-GR.50 |
| BR193 | 1 | 550S162-43 | 2'-1 9/16" | 3.07 | A913-GR.50 |
| BT7 | 1 | 550S162-43 | 7'-10 3/4" | 11.39 | A913-GR.50 |
| S30 | 1 | 550S162-43 | 11'-7 7/16" | 16.77 | A913-GR.50 |
| S31 | 1 | 550S162-43 | 11'-10 5/8" | 17.15 | A913-GR.50 |
| S32 | 1 | 550S162-43 | 9'-10 7/16" | 14.24 | A913-GR.50 |
| S33 | 1 | 550S162-43 | 9'-10 7/16" | 14.24 | A913-GR.50 |
| S35 | 1 | 550S162-43 | 14'-2" | 20.44 | A913-GR.50 |
| S37 | 1 | 550S162-43 | 14'-9 15/16" | 21.39 | A913-GR.50 |
| S211 | 1 | 550S162-43 | 9'-10 7/16" | 14.24 | A913-GR.50 |
| S358 | 1 | 550S162-43 | 10'-1 7/16" | 14.60 | A913-GR.50 |
| TT10 | 1 | 550S162-43 | 0'-9 3/8" | 1.13 | A913-GR.50 |
| TT11 | 1 | 550S162-43 | 4'-2 1/16" | 6.02 | A913-GR.50 |
| TT12 | 1 | 550S162-43 | 3'-3 1/2" | 4.75 | A913-GR.50 |
| | | TOTAL WEIGHT THIS DRAWING | | 219 | |

| REV | DESCRIPTION | DATE |
|---|---|---|
| | | |

| | | | |
|---|---|---|---|
| DESCRIPTION | | | |
| PROJECT NAME | | | |
| DRAWN BY | VN | JOB No. | DRG No. |
| DATE DRAWN | 07/19/2024 | | L6 |

Tekla structures

FRONT VIEW

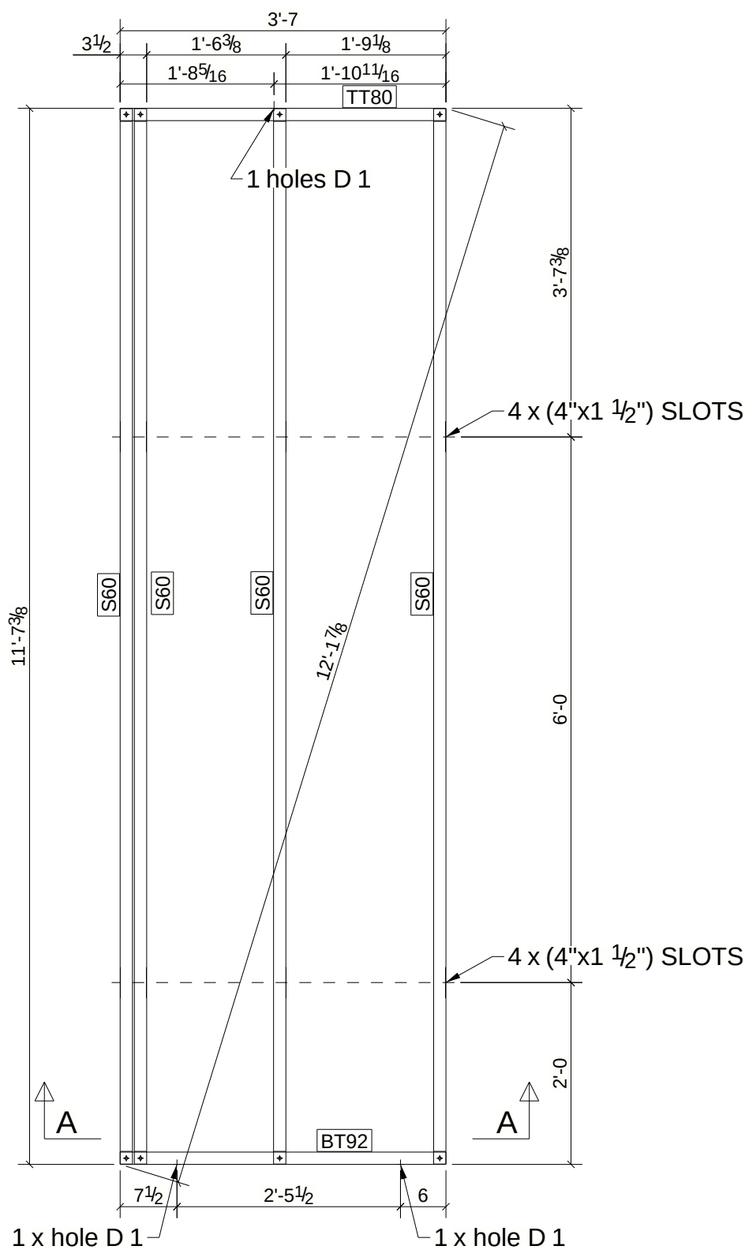


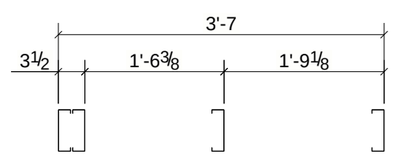


A - A

# BILL OF MATERIAL

| MARK | QTY | DESCRIPTION | LENGTH | WEIGHT | REMARKS |
|---|---|---|---|---|---|
| L7 | 1 | LOAD BEARNING WALL | | | SQ-2 |
| S60 | 1 | 550S162-43 | 11'-7 5/16" | 16.75 | A913-GR.50 |
| BT92 | 1 | 550S162-43 | 3'-7" | 5.17 | A913-GR.50 |
| S60 | 3 | 550S162-43 | 11'-7 5/16" | 50.25 | A913-GR.50 |
| TT80 | 1 | 550S162-43 | 3'-7" | 5.17 | A913-GR.50 |
| | | TOTAL WEIGHT THIS DRAWING | | 77 | |

| REV | DESCRIPTION | DATE |
|---|---|---|
| | | |

| | | | |
|---|---|---|---|
| DESCRIPTION | | | |
| PROJECT NAME | | | |
| DRAWN BY | VN | JOB No. | DRG No. |
| DATE DRAWN | 07/19/2024 | | L7 |

Tekla structures

FRONT VIEW

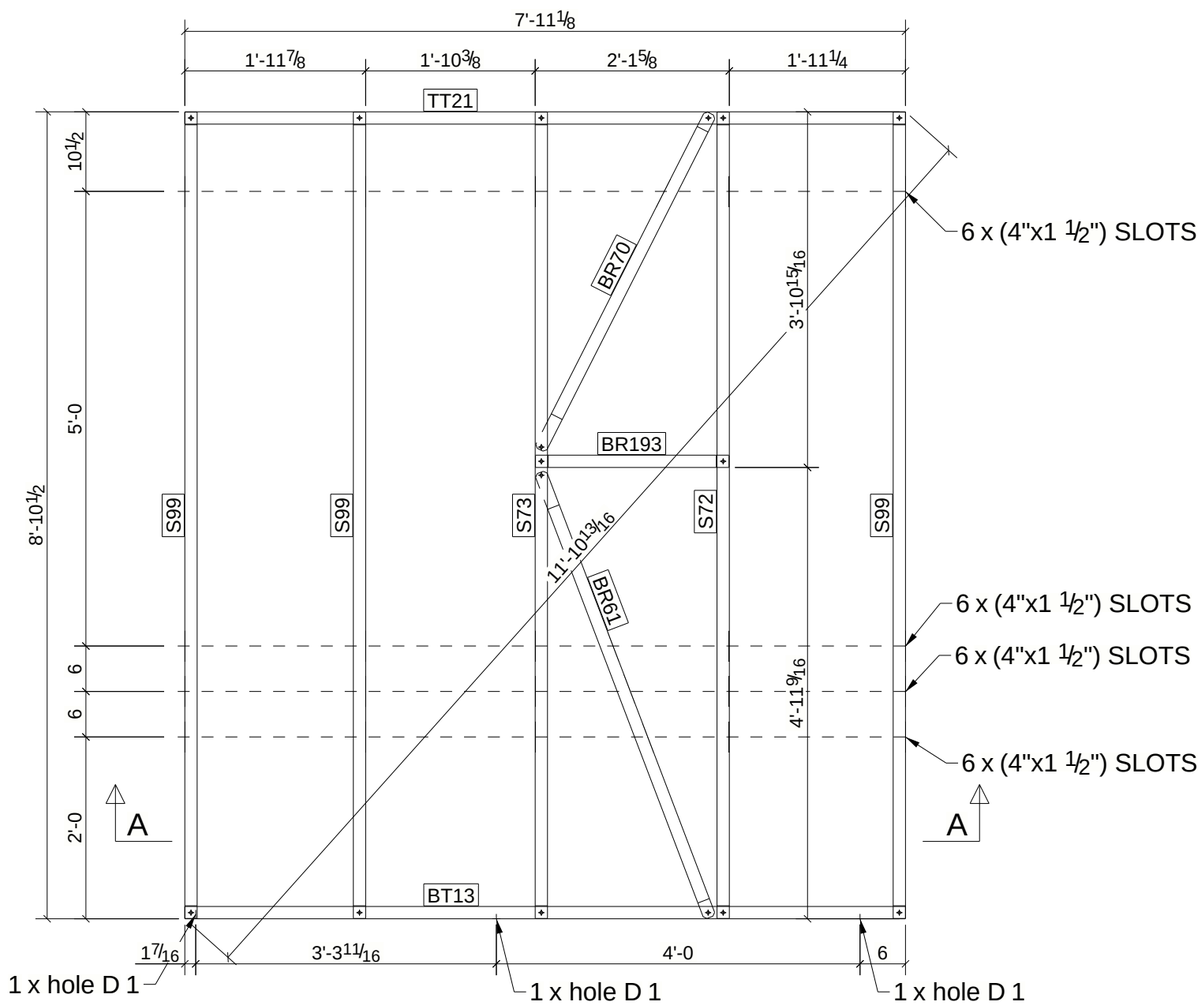


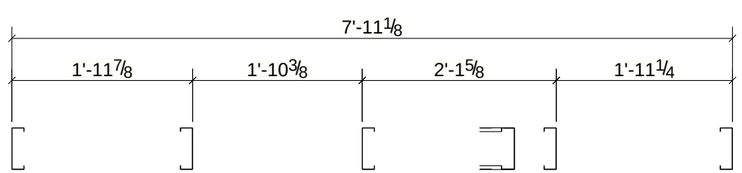


A - A

# BILL OF MATERIAL

| MARK | QTY | DESCRIPTION | LENGTH | WEIGHT | REMARKS |
|---|---|---|---|---|---|
| L8 | 1 | LOAD BEARNING WALL | | | SQ-2 |
| S99 | 1 | 550S162-43 | 8'-10 7/16" | 12.80 | A913-GR.50 |
| BR61 | 1 | 550S162-43 | 5'-2 13/16" | 7.56 | A913-GR.50 |
| BR70 | 1 | 550S162-43 | 4'-1 3/4" | 5.98 | A913-GR.50 |
| BR193 | 1 | 550S162-43 | 2'-1 9/16" | 3.07 | A913-GR.50 |
| BT13 | 1 | 550S162-43 | 7'-11 1/8" | 11.44 | A913-GR.50 |
| S72 | 1 | 550S162-43 | 8'-10 7/16" | 12.80 | A913-GR.50 |
| S73 | 1 | 550S162-43 | 8'-10 7/16" | 12.80 | A913-GR.50 |
| S99 | 2 | 550S162-43 | 8'-10 7/16" | 25.59 | A913-GR.50 |
| TT21 | 1 | 550S162-43 | 7'-11 1/8" | 11.44 | A913-GR.50 |
| | | TOTAL WEIGHT THIS DRAWING | | 103 | |

| REV | DESCRIPTION | DATE |
|---|---|---|
| | | |

| | | | |
|---|---|---|---|
| DESCRIPTION | | | |
| PROJECT NAME | | | |
| DRAWN BY | VN | JOB No. | DRG No. |
| DATE DRAWN | 07/19/2024 | | L8 |

Tekla structures

FRONT VIEW

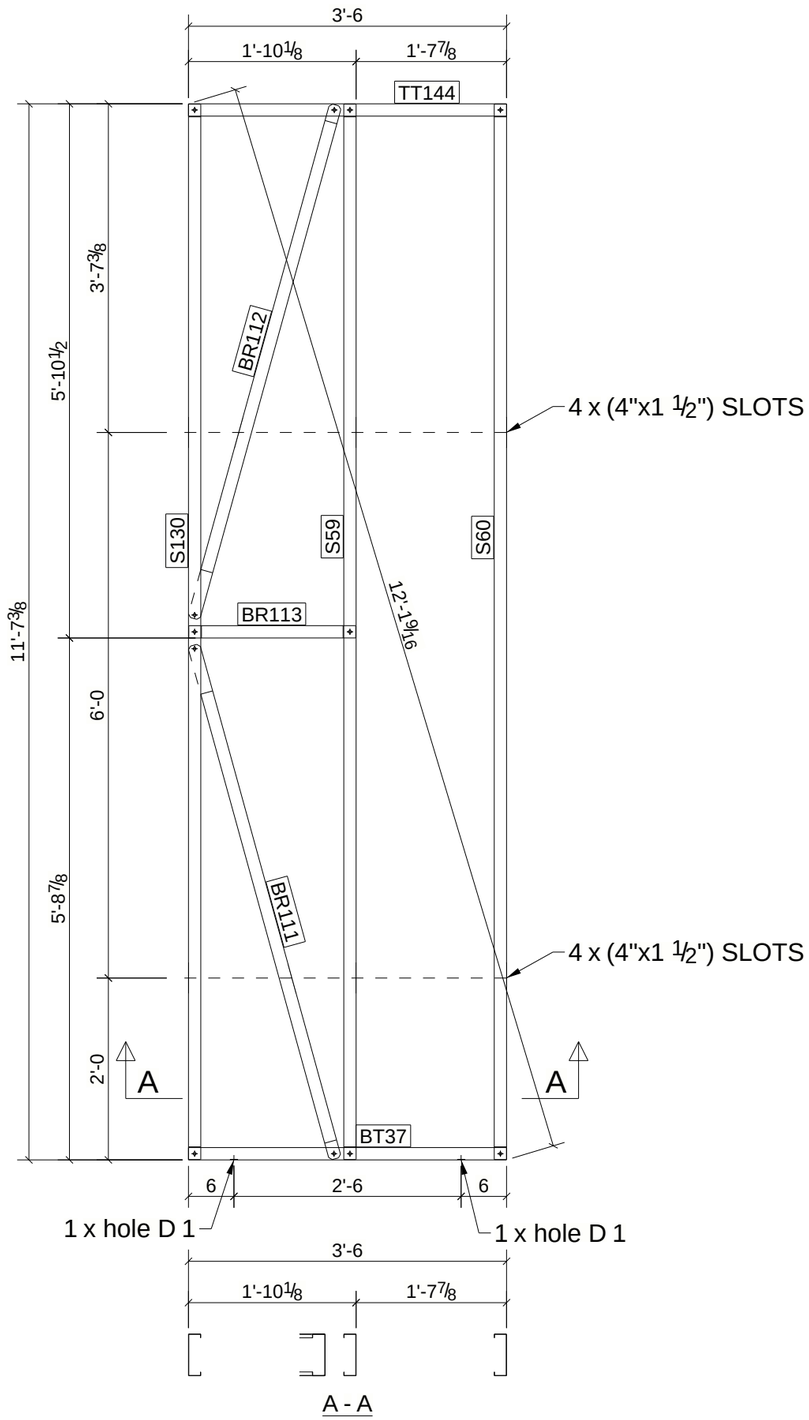


A - A

# BILL OF MATERIAL

| MARK | QTY | DESCRIPTION | LENGTH | WEIGHT | REMARKS |
|---|---|---|---|---|---|
| L9 | 1 | LOAD BEARNING WALL | | | SQ-2 |
| S60 | 1 | 550S162-43 | 11'-7 5/16" | 16.75 | A913-GR.50 |
| BR111 | 1 | 550S162-43 | 5'-10 5/16" | 8.45 | A913-GR.50 |
| BR112 | 1 | 550S162-43 | 5'-10 5/16" | 8.45 | A913-GR.50 |
| BR113 | 1 | 550S162-43 | 1'-10 1/16" | 2.65 | A913-GR.50 |
| BT37 | 1 | 550S162-43 | 3'-6" | 5.05 | A913-GR.50 |
| S59 | 1 | 550S162-43 | 11'-7 5/16" | 16.75 | A913-GR.50 |
| S130 | 1 | 550S162-43 | 11'-7 5/16" | 16.75 | A913-GR.50 |
| TT144 | 1 | 550S162-43 | 3'-6" | 5.05 | A913-GR.50 |
| | | TOTAL WEIGHT THIS DRAWING | | 80 | |

| REV | DESCRIPTION | DATE |
|---|---|---|
| | | |

| | | | |
|---|---|---|---|
| DESCRIPTION | | | |
| PROJECT NAME | | | |
| DRAWN BY | VN | JOB No. | DRG No. |
| DATE DRAWN | 07/19/2024 | | L9 |

Tekla structures

FRONT VIEW

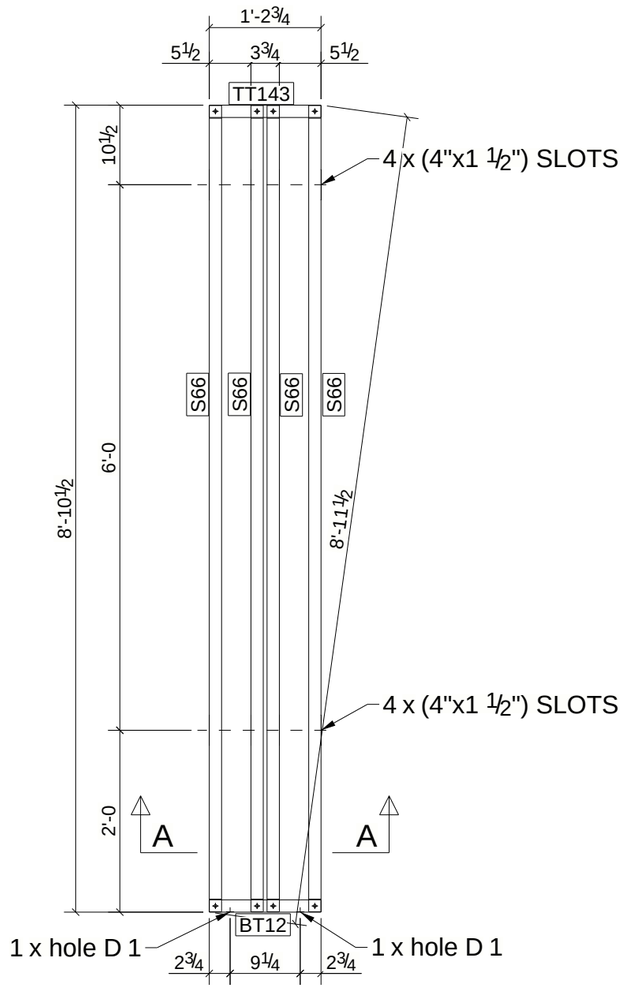


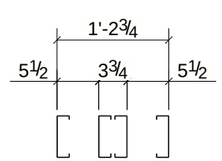


A - A

# BILL OF MATERIAL

| MARK | QTY | DESCRIPTION | LENGTH | WEIGHT | REMARKS |
|---|---|---|---|---|---|
| L10 | 1 | LOAD BEARNING WALL | | | SQ-2 |
| S66 | 1 | 550S162-43 | 8'-10 7/16" | 12.80 | A913-GR.50 |
| BT12 | 1 | 550S162-43 | 1'-2 3/4" | 1.77 | A913-GR.50 |
| S66 | 3 | 550S162-43 | 8'-10 7/16" | 38.39 | A913-GR.50 |
| TT143 | 1 | 550S162-43 | 1'-2 3/4" | 1.77 | A913-GR.50 |
| | | TOTAL WEIGHT THIS DRAWING | | 55 | |

| REV | DESCRIPTION | DATE |
|---|---|---|
| | | |

| | | | |
|---|---|---|---|
| DESCRIPTION | | | |
| PROJECT NAME | | | |
| DRAWN BY | VN | JOB No. | DRG No. |
| DATE DRAWN | 07/19/2024 | | L10 |

Tekla structures

FRONT VIEW

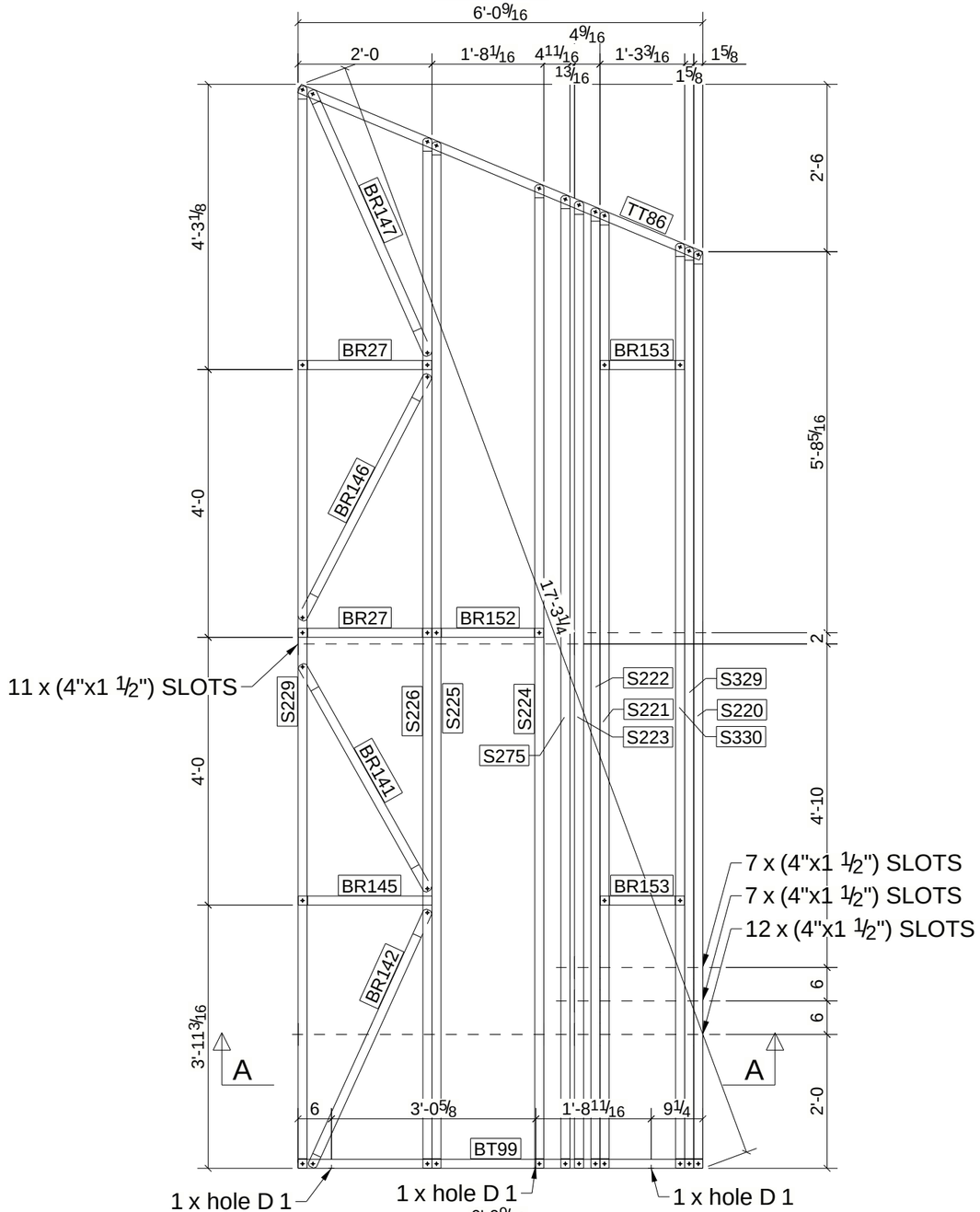


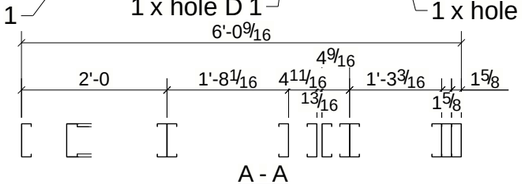


A - A

# BILL OF MATERIAL

| MARK | QTY | DESCRIPTION | LENGTH | WEIGHT | REMARKS |
|---|---|---|---|---|---|
| L11 | 1 | LOAD BEARNING WALL | | | SQ-2 |
| S275 | 1 | 550S162-43 | 14'-6 5/16" | 20.96 | A913-GR.50 |
| BR27 | 2 | 550S162-43 | 1'-11 15/16" | 5.75 | A913-GR.50 |
| BR141 | 1 | 550S162-43 | 3'-10 9/16" | 5.60 | A913-GR.50 |
| BR142 | 1 | 550S162-43 | 4'-2 5/8" | 6.09 | A913-GR.50 |
| BR145 | 1 | 550S162-43 | 2'-0" | 2.88 | A913-GR.50 |
| BR146 | 1 | 550S162-43 | 4'-1 9/16" | 5.96 | A913-GR.50 |
| BR147 | 1 | 550S162-43 | 4'-3 15/16" | 6.25 | A913-GR.50 |
| BR152 | 1 | 550S162-43 | 1'-8" | 2.40 | A913-GR.50 |
| BR153 | 2 | 550S162-43 | 1'-3 1/8" | 3.63 | A913-GR.50 |
| BT99 | 1 | 550S162-43 | 6'-0 9/16" | 8.73 | A913-GR.50 |
| S220 | 1 | 550S162-43 | 13'-8 3/8" | 19.77 | A913-GR.50 |
| S221 | 1 | 550S162-43 | 14'-3 3/8" | 20.61 | A913-GR.50 |
| S222 | 1 | 550S162-43 | 14'-4 1/16" | 20.69 | A913-GR.50 |
| S223 | 1 | 550S162-43 | 14'-5 5/16" | 20.84 | A913-GR.50 |
| S224 | 1 | 550S162-43 | 14'-8 1/4" | 21.20 | A913-GR.50 |
| S225 | 1 | 550S162-43 | 15'-3 15/16" | 22.12 | A913-GR.50 |
| S226 | 1 | 550S162-43 | 15'-4 5/8" | 22.20 | A913-GR.50 |
| S229 | 1 | 550S162-43 | 16'-1 15/16" | 23.32 | A913-GR.50 |
| S329 | 1 | 550S162-43 | 13'-9 1/16" | 19.85 | A913-GR.50 |
| S330 | 1 | 550S162-43 | 13'-9 3/4" | 19.93 | A913-GR.50 |
| TT86 | 1 | 550S162-43 | 6'-6" | 9.38 | A913-GR.50 |
| | | TOTAL WEIGHT THIS DRAWING | | 288 | |

| REV | DESCRIPTION | DATE |
|---|---|---|
| | | |

| | | | |
|---|---|---|---|
| DESCRIPTION | | | |
| PROJECT NAME | | | |
| DRAWN BY | VN | JOB No. | DRG No. |
| DATE DRAWN | 07/19/2024 | | L11 |

Tekla structures

FRONT VIEW

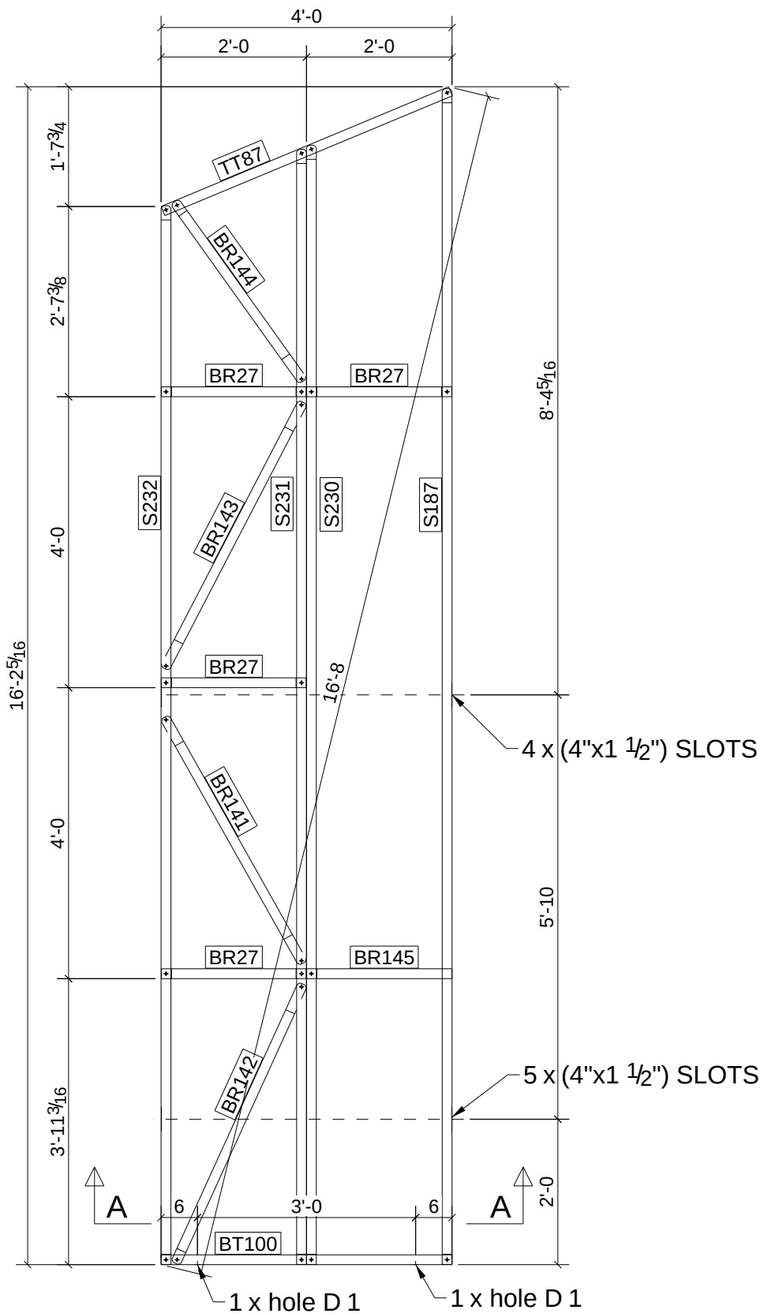


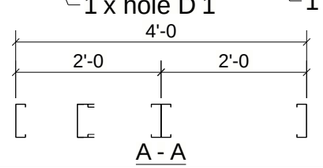


A - A

# BILL OF MATERIAL

| MARK | QTY | DESCRIPTION | LENGTH | WEIGHT | REMARKS |
|---|---|---|---|---|---|
| L12 | 1 | LOAD BEARNING WALL | | | SQ-2 |
| S187 | 1 | 550S162-43 | 16'-1 15/16" | 23.32 | A913-GR.50 |
| BR27 | 4 | 550S162-43 | 1'-11 15/16" | 11.50 | A913-GR.50 |
| BR141 | 1 | 550S162-43 | 3'-10 9/16" | 5.60 | A913-GR.50 |
| BR142 | 1 | 550S162-43 | 4'-2 5/8" | 6.09 | A913-GR.50 |
| BR143 | 1 | 550S162-43 | 4'-1 1/2" | 5.95 | A913-GR.50 |
| BR144 | 1 | 550S162-43 | 3'-0 3/8" | 4.38 | A913-GR.50 |
| BR145 | 1 | 550S162-43 | 2'-0" | 2.88 | A913-GR.50 |
| BT100 | 1 | 550S162-43 | 4'-0" | 5.77 | A913-GR.50 |
| S230 | 1 | 550S162-43 | 15'-4 5/8" | 22.20 | A913-GR.50 |
| S231 | 1 | 550S162-43 | 15'-3 15/16" | 22.12 | A913-GR.50 |
| S232 | 1 | 550S162-43 | 14'-6 5/8" | 21.00 | A913-GR.50 |
| TT87 | 1 | 550S162-43 | 4'-3 3/8" | 6.18 | A913-GR.50 |
| | | TOTAL WEIGHT THIS DRAWING | | 137 | |

| REV | DESCRIPTION | DATE |
|---|---|---|
| | | |

| | | | |
|---|---|---|---|
| DESCRIPTION | | | |
| PROJECT NAME | | | |
| DRAWN BY | VN | JOB No. | DRG No. |
| DATE DRAWN | 07/19/2024 | | L12 |

Tekla structures

FRONT VIEW

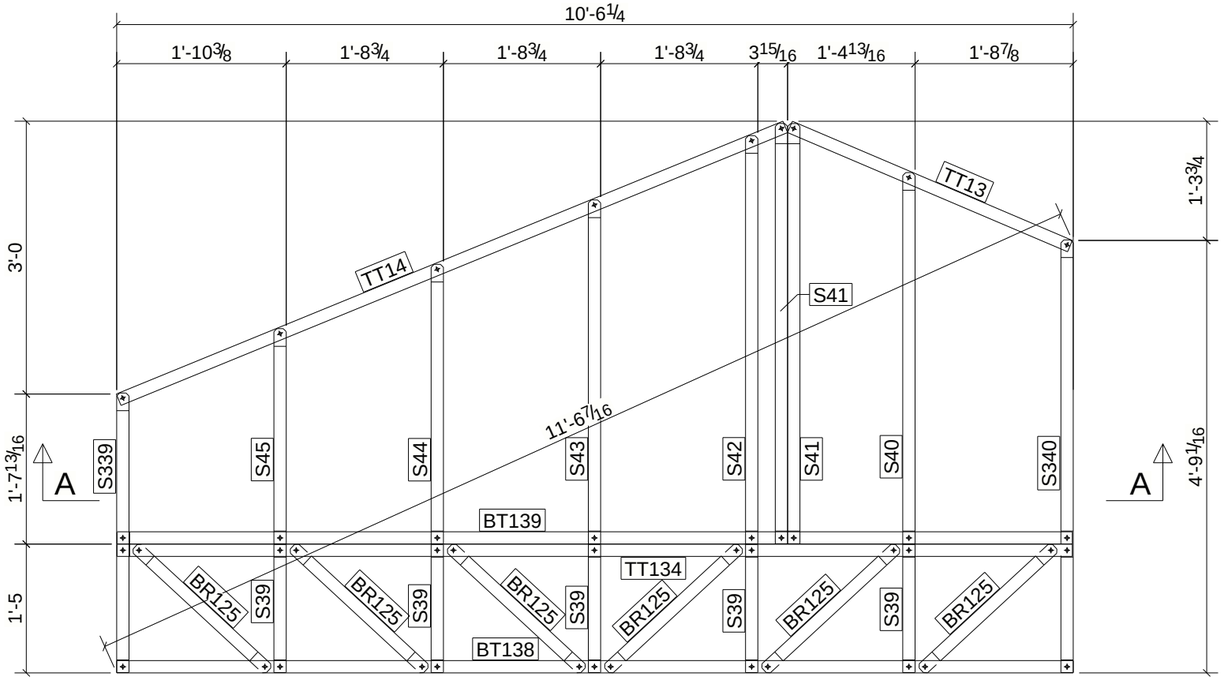


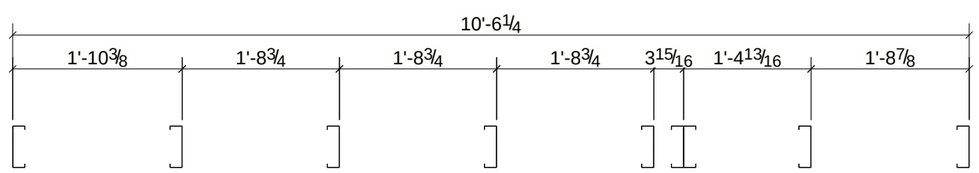


A - A

# BILL OF MATERIAL

| MARK | QTY | DESCRIPTION | LENGTH | WEIGHT | REMARKS |
|---|---|---|---|---|---|
| L13 | 1 | LOAD BEARNING WALL | | | SQ-2 |
| S339 | 1 | 550S162-43 | 3'-0 7/8" | 4.44 | A913-GR.50 |
| BR125 | 6 | 550S162-43 | 2'-0" | 17.31 | A913-GR.50 |
| BT138 | 1 | 550S162-43 | 10'-6 1/4" | 15.18 | A913-GR.50 |
| BT139 | 1 | 550S162-43 | 10'-6 1/16" | 15.16 | A913-GR.50 |
| S39 | 5 | 550S162-43 | 1'-4 15/16" | 10.17 | A913-GR.50 |
| S40 | 1 | 550S162-43 | 4'-1" | 5.89 | A913-GR.50 |
| S41 | 2 | 550S162-43 | 4'-7 7/16" | 13.34 | A913-GR.50 |
| S42 | 1 | 550S162-43 | 4'-5 7/8" | 6.48 | A913-GR.50 |
| S43 | 1 | 550S162-43 | 3'-9 3/8" | 5.46 | A913-GR.50 |
| S44 | 1 | 550S162-43 | 3'-0 7/8" | 4.43 | A913-GR.50 |
| S45 | 1 | 550S162-43 | 2'-4 3/8" | 3.41 | A913-GR.50 |
| S340 | 1 | 550S162-43 | 4'-9 1/8" | 6.87 | A913-GR.50 |
| TT13 | 1 | 550S162-43 | 3'-4 3/16" | 4.83 | A913-GR.50 |
| TT14 | 1 | 550S162-43 | 7'-11 1/16" | 11.43 | A913-GR.50 |
| TT134 | 1 | 550S162-43 | 10'-6 1/16" | 15.16 | A913-GR.50 |
| | | TOTAL WEIGHT THIS DRAWING | | 140 | |

| REV | DESCRIPTION | DATE |
|---|---|---|
| | | |

| | | | |
|---|---|---|---|
| DESCRIPTION | | | |
| PROJECT NAME | | | |
| DRAWN BY | VN | JOB No. | DRG No. |
| DATE DRAWN | 07/09/2024 | | L13 |

Tekla structures

FRONT VIEW

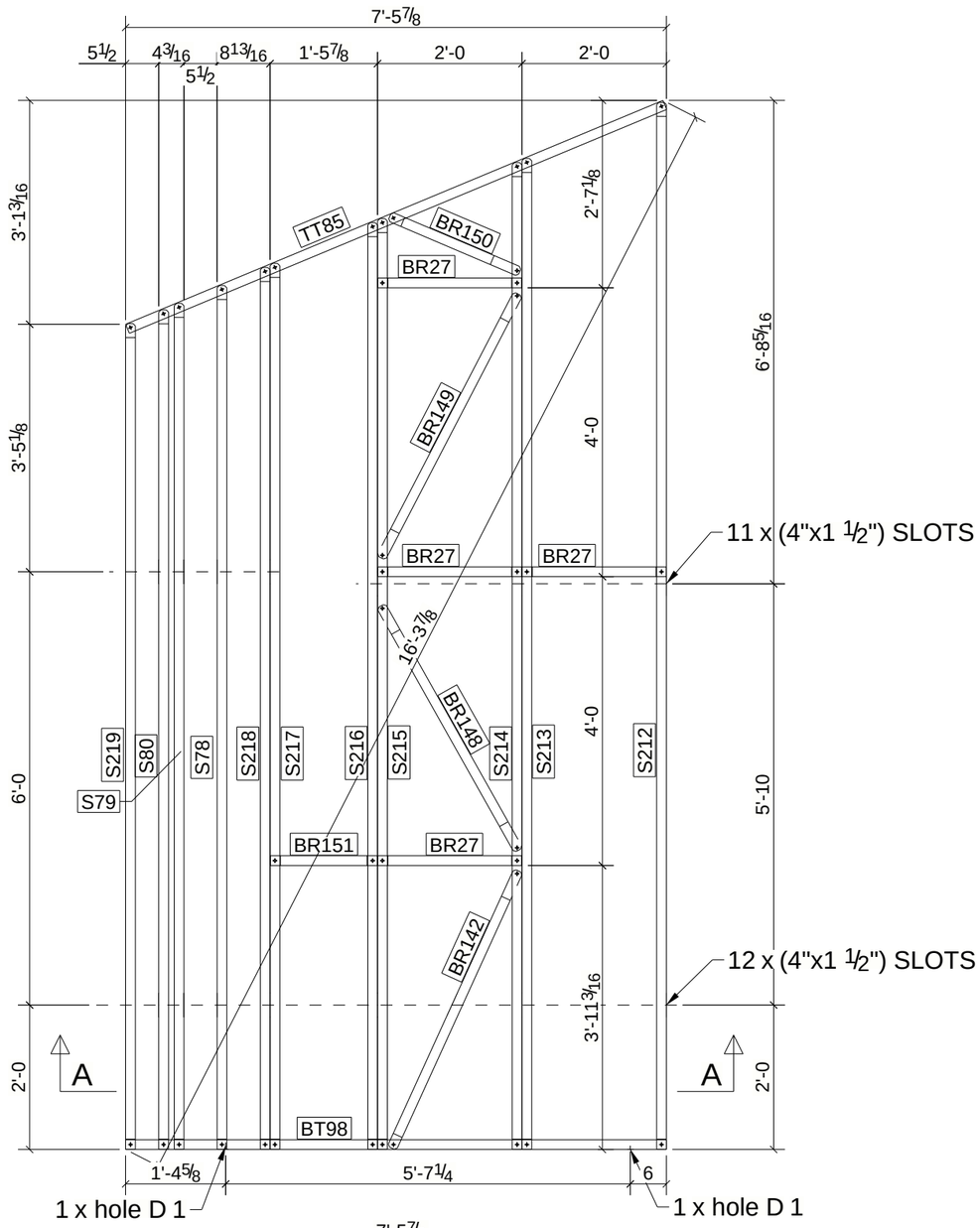


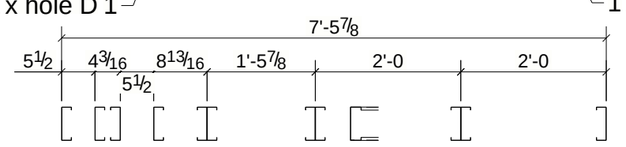


A - A

# BILL OF MATERIAL

| MARK | QTY | DESCRIPTION | LENGTH | WEIGHT | REMARKS |
|---|---|---|---|---|---|
| L14 | 1 | LOAD BEARNING WALL | | | SQ-2 |
| S218 | 1 | 550S162-43 | 12'-2 1/2" | 17.62 | A913-GR.50 |
| BR27 | 4 | 550S162-43 | 1'-11 15/16" | 11.50 | A913-GR.50 |
| BR142 | 1 | 550S162-43 | 4'-2 5/8" | 6.09 | A913-GR.50 |
| BR148 | 1 | 550S162-43 | 3'-10 9/16" | 5.60 | A913-GR.50 |
| BR149 | 1 | 550S162-43 | 4'-1 3/8" | 5.94 | A913-GR.50 |
| BR150 | 1 | 550S162-43 | 1'-11 7/16" | 2.82 | A913-GR.50 |
| BR151 | 1 | 550S162-43 | 1'-5 3/4" | 2.14 | A913-GR.50 |
| BT98 | 1 | 550S162-43 | 7'-5 7/8" | 10.81 | A913-GR.50 |
| S78 | 1 | 550S162-43 | 11'-11 1/2" | 17.26 | A913-GR.50 |
| S79 | 1 | 550S162-43 | 11'-8 9/16" | 16.90 | A913-GR.50 |
| S80 | 1 | 550S162-43 | 11'-7 1/2" | 16.77 | A913-GR.50 |
| S212 | 1 | 550S162-43 | 14'-5 15/16" | 20.92 | A913-GR.50 |
| S213 | 1 | 550S162-43 | 13'-8 5/8" | 19.80 | A913-GR.50 |
| S214 | 1 | 550S162-43 | 13'-7 15/16" | 19.72 | A913-GR.50 |
| S215 | 1 | 550S162-43 | 12'-10 5/8" | 18.59 | A913-GR.50 |
| S216 | 1 | 550S162-43 | 12'-9 15/16" | 18.51 | A913-GR.50 |
| S217 | 1 | 550S162-43 | 12'-3 3/16" | 17.70 | A913-GR.50 |
| S219 | 1 | 550S162-43 | 11'-5 3/16" | 16.50 | A913-GR.50 |
| TT85 | 1 | 550S162-43 | 8'-0 3/4" | 11.63 | A913-GR.50 |
| | | TOTAL WEIGHT THIS DRAWING | | 257 | |

| REV | DESCRIPTION | DATE |
|---|---|---|
| | | |

| | | | |
|---|---|---|---|
| DESCRIPTION | | | |
| PROJECT NAME | | | |
| DRAWN BY | VN | JOB No. | DRG No. |
| DATE DRAWN | 07/19/2024 | | L14 |

Tekla structures

FRONT VIEW

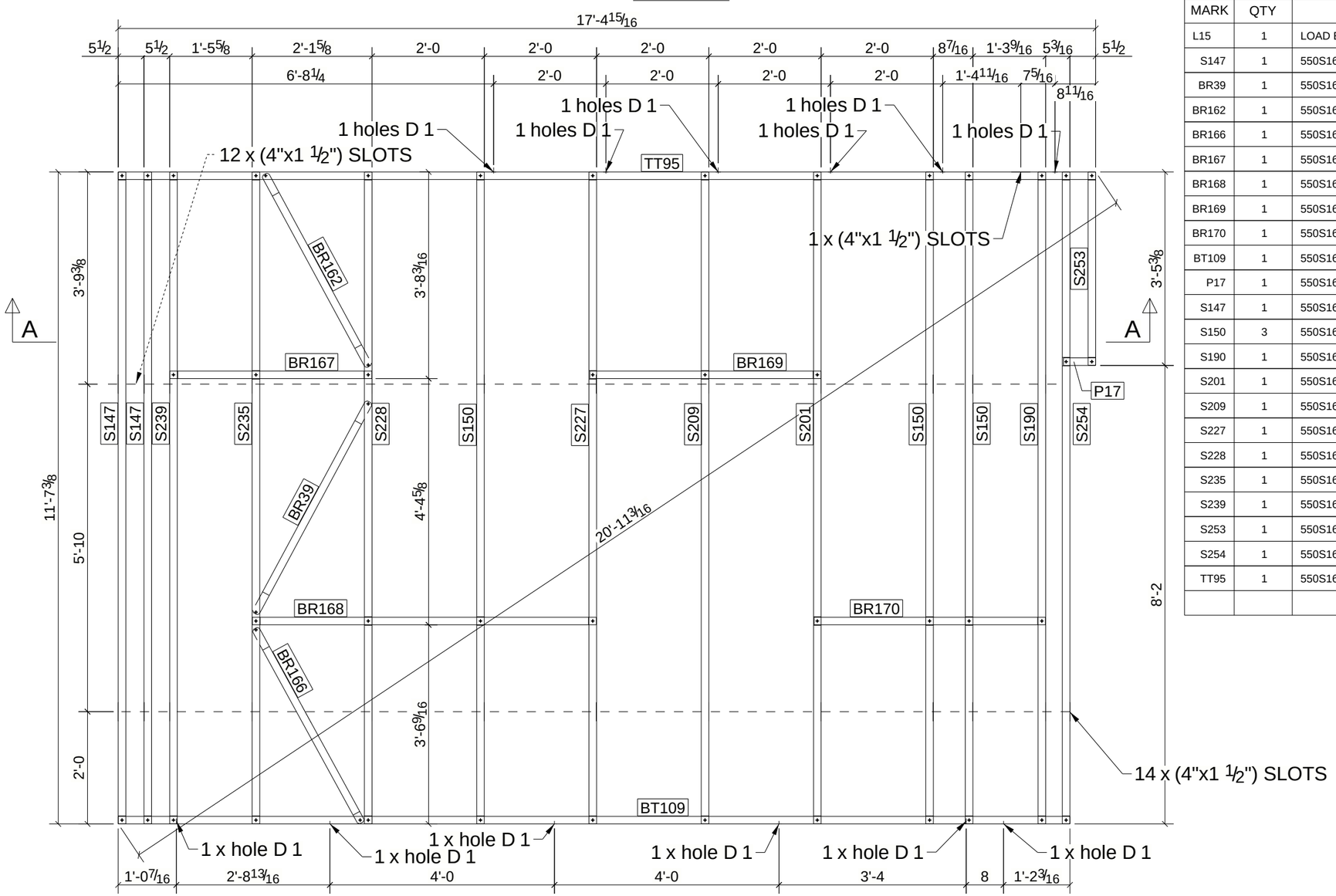


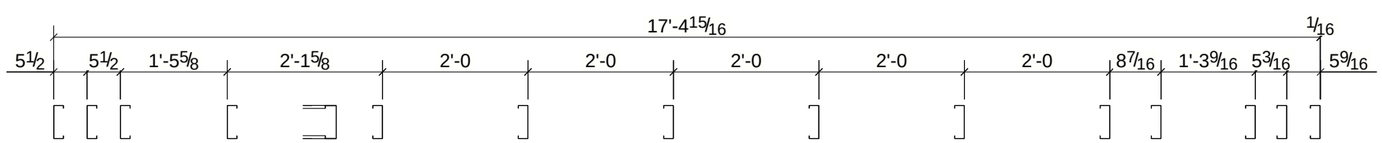


A - A

# BILL OF MATERIAL

| MARK | QTY | DESCRIPTION | LENGTH | WEIGHT | REMARKS |
|---|---|---|---|---|---|
| L15 | 1 | LOAD BEARNING WALL | | | SQ-2 |
| S147 | 1 | 550S162-43 | 11'-7 5/16" | 16.75 | A913-GR.50 |
| BR39 | 1 | 550S162-43 | 4'-3 7/16" | 6.18 | A913-GR.50 |
| BR162 | 1 | 550S162-43 | 3'-10 3/4" | 5.62 | A913-GR.50 |
| BR166 | 1 | 550S162-43 | 3'-11 3/8" | 5.70 | A913-GR.50 |
| BR167 | 1 | 550S162-43 | 3'-7 3/16" | 5.19 | A913-GR.50 |
| BR168 | 1 | 550S162-43 | 6'-1 9/16" | 8.84 | A913-GR.50 |
| BR169 | 1 | 550S162-43 | 4'-1 3/8" | 5.94 | A913-GR.50 |
| BR170 | 1 | 550S162-43 | 4'-1 7/16" | 5.95 | A913-GR.50 |
| BT109 | 1 | 550S162-43 | 16'-11 7/16" | 24.46 | A913-GR.50 |
| P17 | 1 | 550S162-43 | 0'-6 7/8" | 0.83 | A913-GR.50 |
| S147 | 1 | 550S162-43 | 11'-7 5/16" | 16.75 | A913-GR.50 |
| S150 | 3 | 550S162-43 | 11'-7 5/16" | 50.25 | A913-GR.50 |
| S190 | 1 | 550S162-43 | 11'-7 5/16" | 16.75 | A913-GR.50 |
| S201 | 1 | 550S162-43 | 11'-7 5/16" | 16.75 | A913-GR.50 |
| S209 | 1 | 550S162-43 | 11'-7 5/16" | 16.75 | A913-GR.50 |
| S227 | 1 | 550S162-43 | 11'-7 5/16" | 16.75 | A913-GR.50 |
| S228 | 1 | 550S162-43 | 11'-7 5/16" | 16.75 | A913-GR.50 |
| S235 | 1 | 550S162-43 | 11'-7 5/16" | 16.75 | A913-GR.50 |
| S239 | 1 | 550S162-43 | 11'-7 5/16" | 16.75 | A913-GR.50 |
| S253 | 1 | 550S162-43 | 3'-5 5/16" | 4.96 | A913-GR.50 |
| S254 | 1 | 550S162-43 | 11'-7 5/16" | 16.75 | A913-GR.50 |
| TT95 | 1 | 550S162-43 | 17'-4 15/16" | 25.12 | A913-GR.50 |
| | | TOTAL WEIGHT THIS DRAWING | | 317 | |

| REV | DESCRIPTION | DATE |
|---|---|---|
| | | |

| | | | |
|---|---|---|---|
| DESCRIPTION | | | |
| PROJECT NAME | | | |
| DRAWN BY | VN | JOB No. | DRG No. |
| DATE DRAWN | 07/19/2024 | | L15 |

Tekla structures

FRONT VIEW

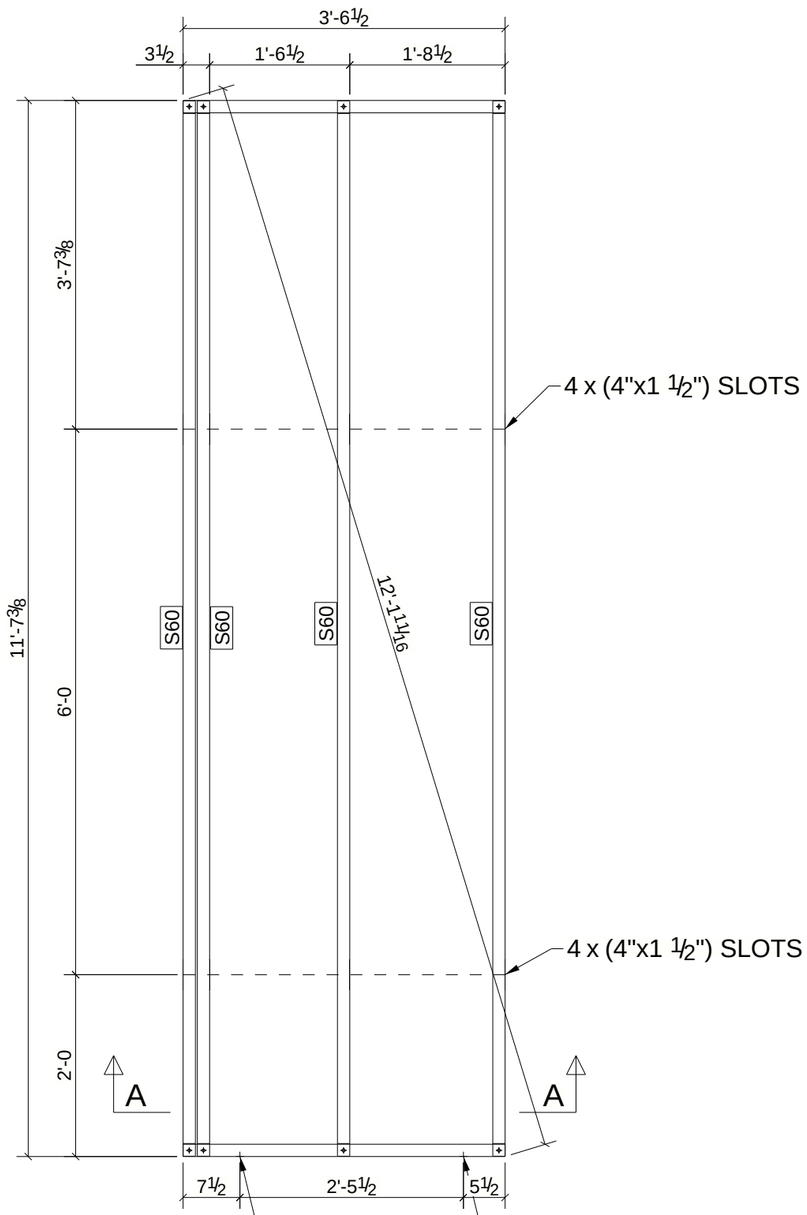


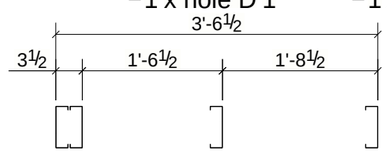


A - A

# BILL OF MATERIAL

| MARK | QTY | DESCRIPTION | LENGTH | WEIGHT | REMARKS |
|---|---|---|---|---|---|
| L16 | 1 | LOAD BEARNING WALL | | | SQ-2 |
| S60 | 1 | 550S162-43 | 11'-7 5/16" | 16.75 | A913-GR.50 |
| BT173 | 1 | 550S162-43 | 3'-6 1/2" | 5.11 | A913-GR.50 |
| S60 | 3 | 550S162-43 | 11'-7 5/16" | 50.25 | A913-GR.50 |
| TT146 | 1 | 550S162-43 | 3'-6 1/2" | 5.11 | A913-GR.50 |
| | | TOTAL WEIGHT THIS DRAWING | | 77 | |

| REV | DESCRIPTION | DATE |
|---|---|---|
| | | |

| | | | |
|---|---|---|---|
| DESCRIPTION | | | |
| PROJECT NAME | | | |
| DRAWN BY | VN | JOB No. | DRG No. |
| DATE DRAWN | 07/19/2024 | | L16 |

Tekla structures

FRONT VIEW

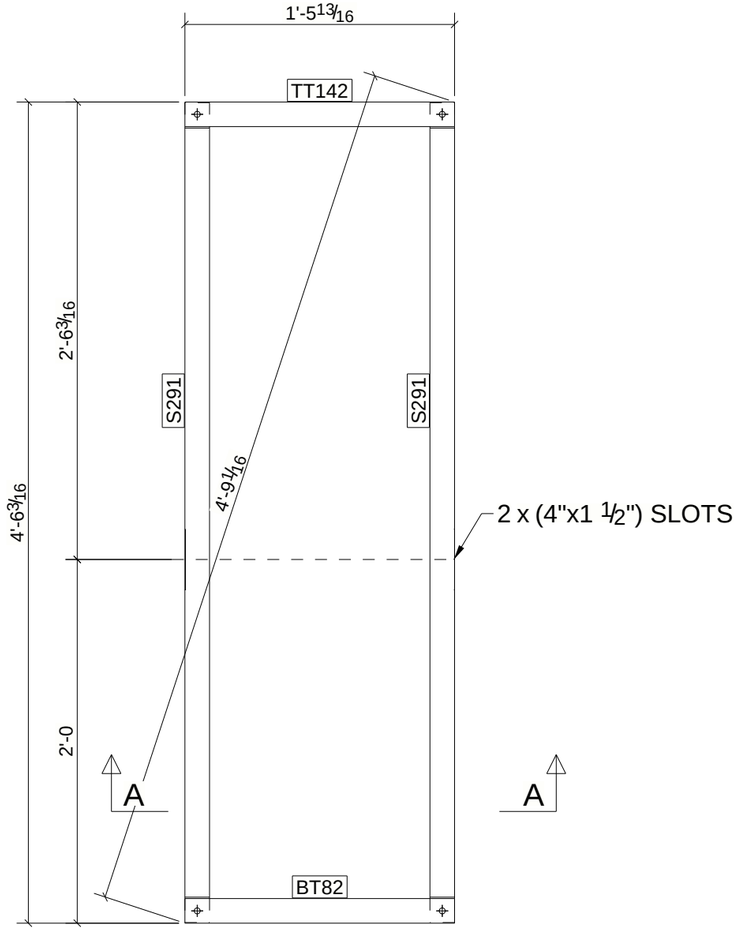


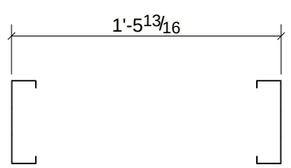


A - A

# BILL OF MATERIAL

| MARK | QTY | DESCRIPTION | LENGTH | WEIGHT | REMARKS |
|---|---|---|---|---|---|
| L17 | 1 | LOAD BEARNING WALL | | | SQ-2 |
| S291 | 1 | 550S162-43 | 4'-6 1/8" | 6.51 | A913-GR.50 |
| BT82 | 1 | 550S162-43 | 1'-5 13/16" | 2.14 | A913-GR.50 |
| S291 | 1 | 550S162-43 | 4'-6 1/8" | 6.51 | A913-GR.50 |
| TT142 | 1 | 550S162-43 | 1'-5 13/16" | 2.14 | A913-GR.50 |
| | | TOTAL WEIGHT THIS DRAWING | | 17 | |

| REV | DESCRIPTION | DATE |
|---|---|---|
| | | |

| | | | |
|---|---|---|---|
| DESCRIPTION | | | |
| PROJECT NAME | | | |
| DRAWN BY | | JOB No. | DRG No. |
| DATE DRAWN | 07/09/2024 | | L17 |

Tekla structures

FRONT VIEW

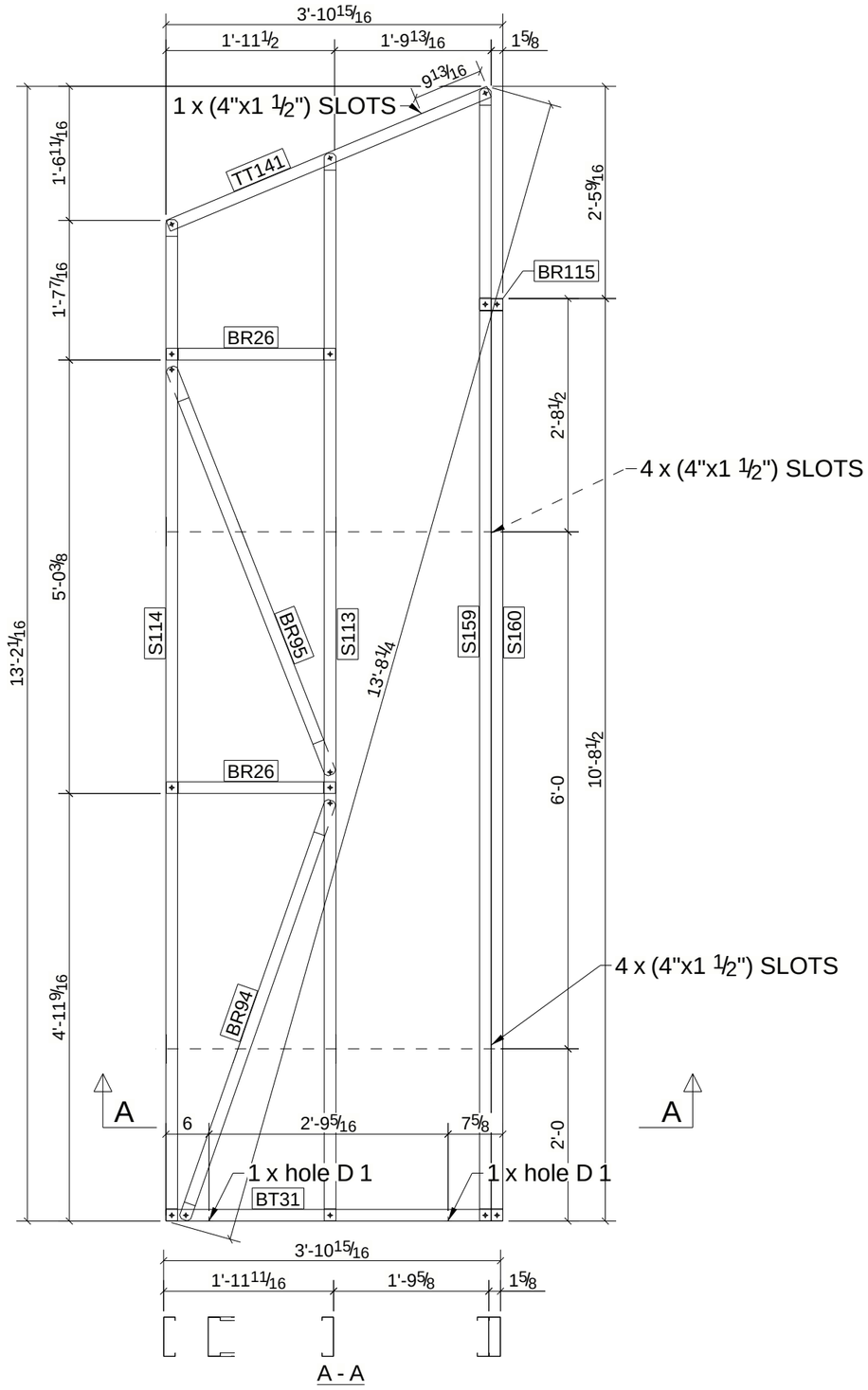


A - A

# BILL OF MATERIAL

| MARK | QTY | DESCRIPTION | LENGTH | WEIGHT | REMARKS |
|---|---|---|---|---|---|
| L18 | 1 | LOAD BEARNING WALL | | | SQ-2 |
| S159 | 1 | 550S162-43 | 13'-1 11/16" | 18.97 | A913-GR.50 |
| BR26 | 2 | 550S162-43 | 1'-11 9/16" | 5.67 | A913-GR.50 |
| BR94 | 1 | 550S162-43 | 5'-1 7/8" | 7.44 | A913-GR.50 |
| BR95 | 1 | 550S162-43 | 5'-1" | 7.34 | A913-GR.50 |
| BR115 | 1 | 550S162-43 | 0'-3 1/4" | 0.39 | A913-GR.50 |
| BT31 | 1 | 550S162-43 | 3'-10 15/16" | 5.64 | A913-GR.50 |
| S113 | 1 | 550S162-43 | 12'-4 11/16" | 17.88 | A913-GR.50 |
| S114 | 1 | 550S162-43 | 11'-7 7/16" | 16.77 | A913-GR.50 |
| S160 | 1 | 550S162-43 | 10'-8 7/16" | 15.44 | A913-GR.50 |
| TT141 | 1 | 550S162-43 | 4'-0 7/16" | 5.82 | A913-GR.50 |
| | | TOTAL WEIGHT THIS DRAWING | | 101 | |

| REV | DESCRIPTION | DATE |
|---|---|---|
| | | |

| | | | |
|---|---|---|---|
| DESCRIPTION | | | |
| PROJECT NAME | | | |
| DRAWN BY | VN | JOB No. | DRG No. |
| DATE DRAWN | 07/19/2024 | | L18 |

Tekla structures

FRONT VIEW

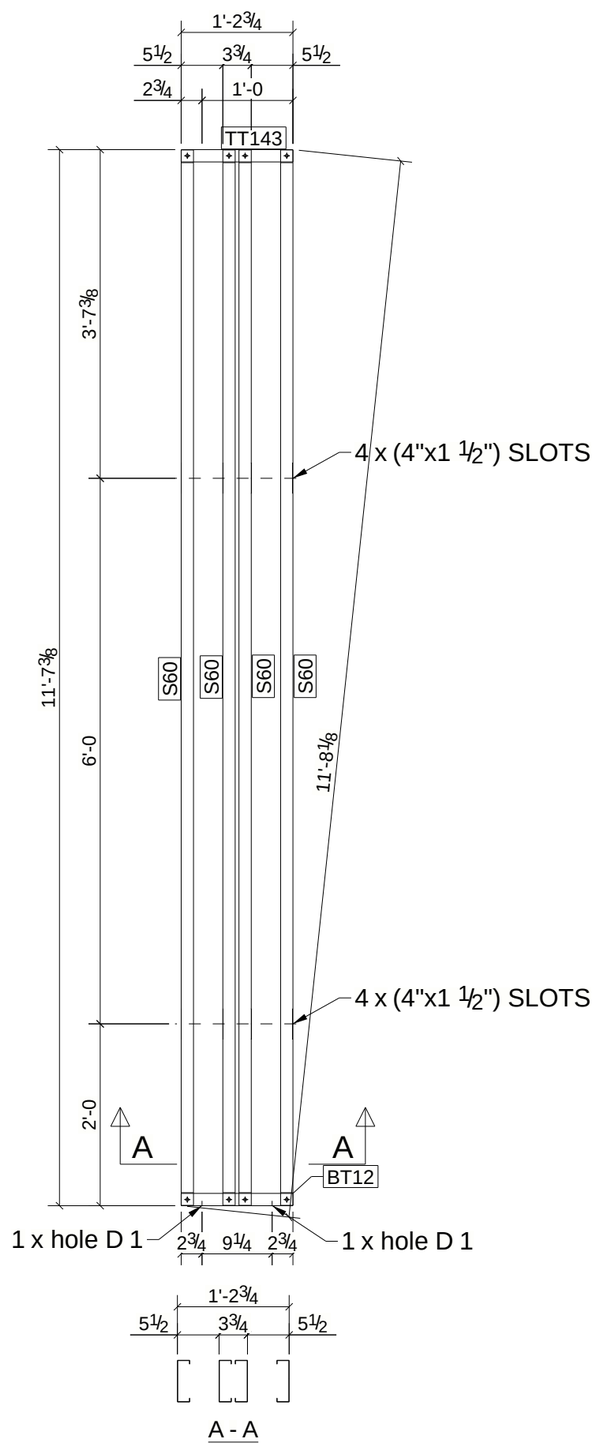


A - A

# BILL OF MATERIAL

| MARK | QTY | DESCRIPTION | LENGTH | WEIGHT | REMARKS |
|---|---|---|---|---|---|
| L19 | 2 | LOAD BEARNING WALLS | | | SQ-2 |
| S60 | 2 | 550S162-43 | 11'-7 5/16" | 33.50 | A913-GR.50 |
| BT12 | 2 | 550S162-43 | 1'-2 3/4" | 3.55 | A913-GR.50 |
| S60 | 6 | 550S162-43 | 11'-7 5/16" | 100.49 | A913-GR.50 |
| TT143 | 2 | 550S162-43 | 1'-2 3/4" | 3.55 | A913-GR.50 |
| | | TOTAL WEIGHT THIS DRAWING | | 141 | |

| REV | DESCRIPTION | DATE |
|---|---|---|
| | | |

| | | | |
|---|---|---|---|
| DESCRIPTION | | | |
| PROJECT NAME | | | |
| DRAWN BY | VN | JOB No. | DRG No. |
| DATE DRAWN | 07/19/2024 | | L19 |

Tekla structures

FRONT VIEW

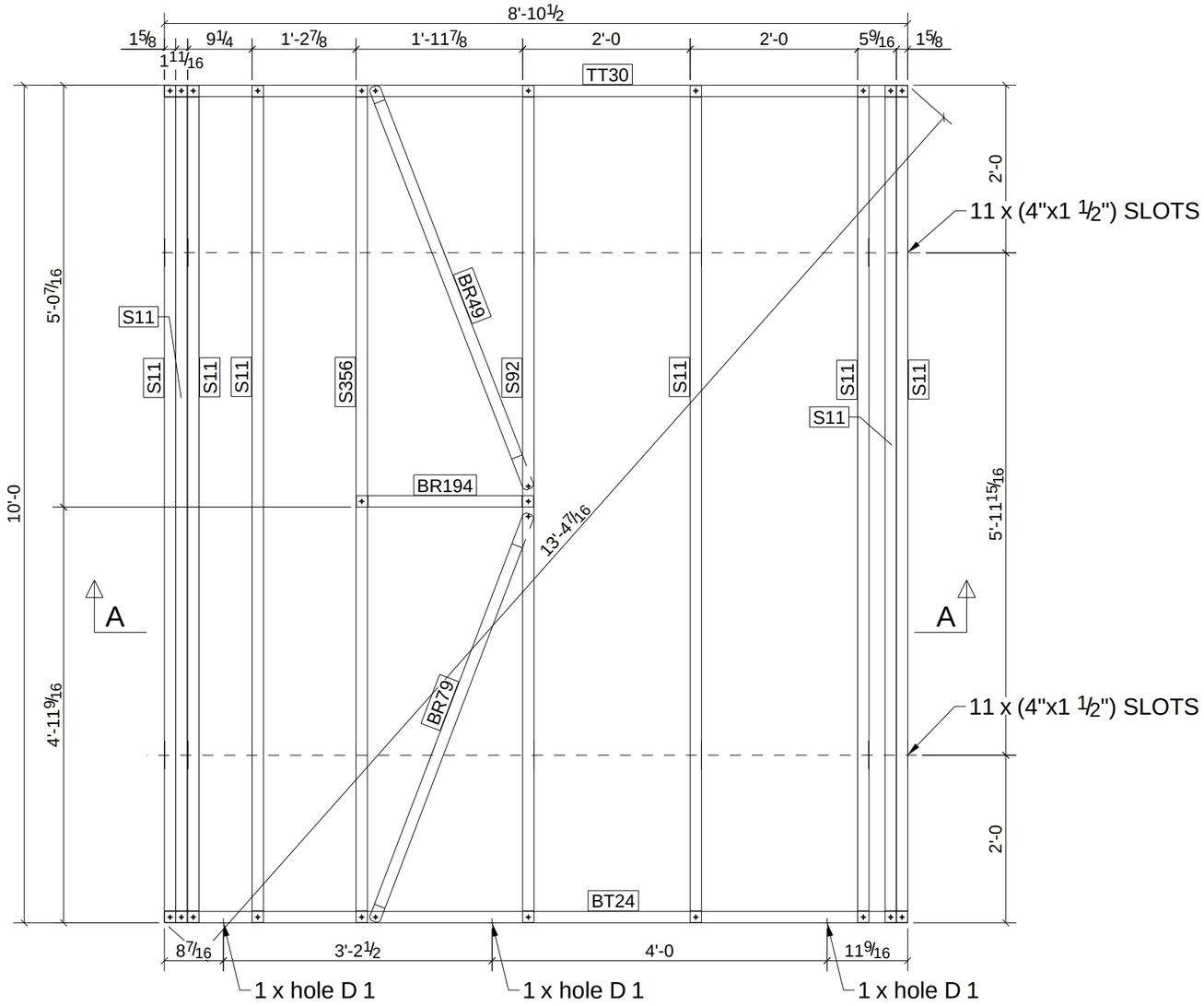


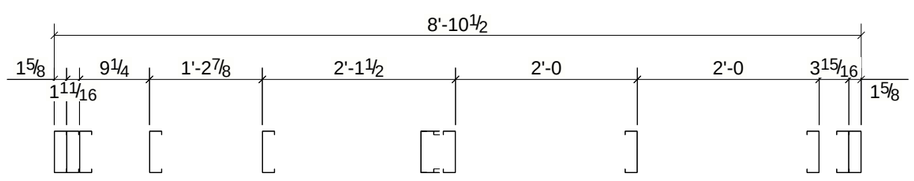


A - A

# BILL OF MATERIAL

| MARK | QTY | DESCRIPTION | LENGTH | WEIGHT | REMARKS |
|---|---|---|---|---|---|
| L20 | 1 | LOAD BEARNING WALL | | | SQ-2 |
| S11 | 1 | 550S162-43 | 9'-11 15/16" | 14.42 | A913-GR.50 |
| BR49 | 1 | 550S162-43 | 5'-1 13/16" | 7.43 | A913-GR.50 |
| BR79 | 1 | 550S162-43 | 5'-2 1/2" | 7.51 | A913-GR.50 |
| BR194 | 1 | 550S162-43 | 2'-1 7/16" | 3.06 | A913-GR.50 |
| BT24 | 1 | 550S162-43 | 8'-10 1/2" | 12.81 | A913-GR.50 |
| S11 | 7 | 550S162-43 | 9'-11 15/16" | 100.93 | A913-GR.50 |
| S92 | 1 | 550S162-43 | 9'-11 15/16" | 14.42 | A913-GR.50 |
| S356 | 1 | 550S162-43 | 9'-11 15/16" | 14.42 | A913-GR.50 |
| TT30 | 1 | 550S162-43 | 8'-10 1/2" | 12.81 | A913-GR.50 |
| | | TOTAL WEIGHT THIS DRAWING | | 188 | |

| REV | DESCRIPTION | DATE |
|---|---|---|
| | | |

| | | | |
|---|---|---|---|
| DESCRIPTION | | | |
| PROJECT NAME | | | |
| DRAWN BY | VN | JOB No. | DRG No. |
| DATE DRAWN | 07/19/2024 | | L20 |

Tekla structures

FRONT VIEW

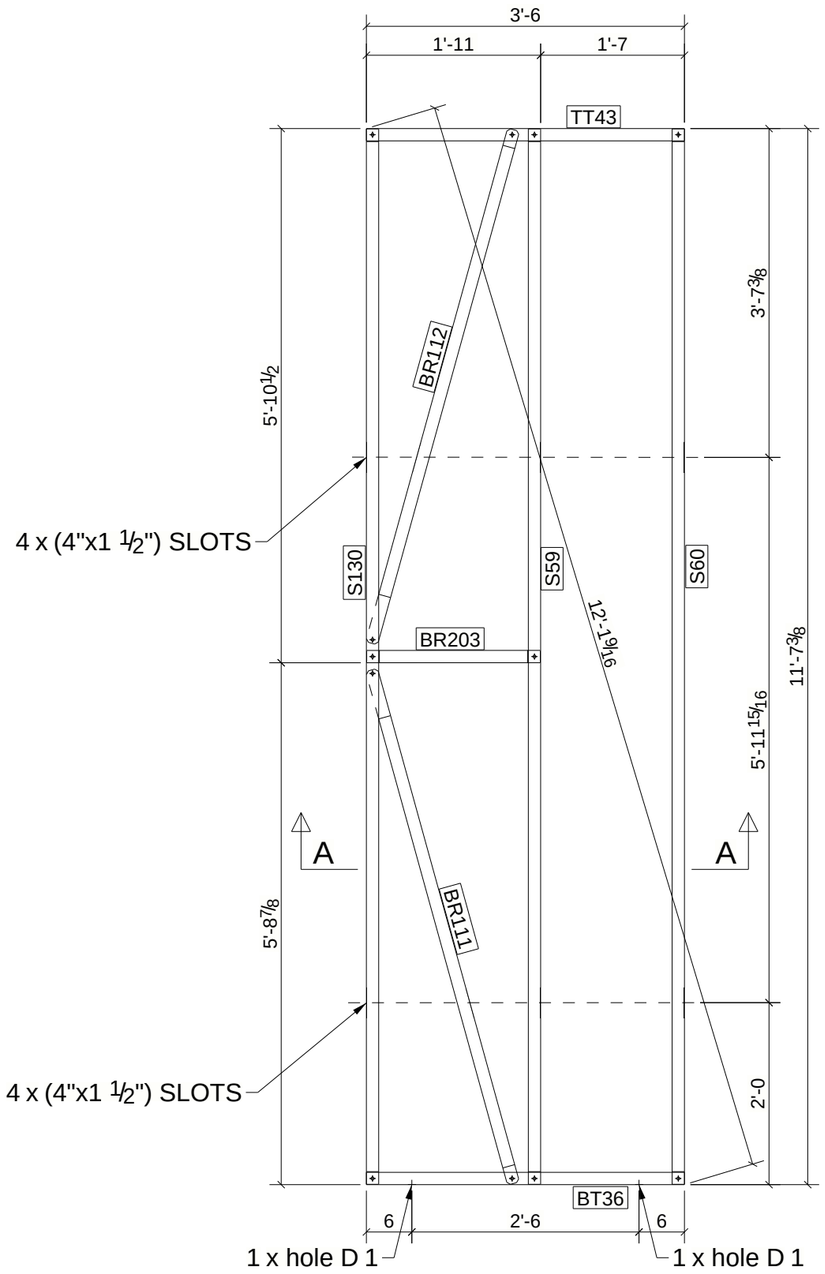


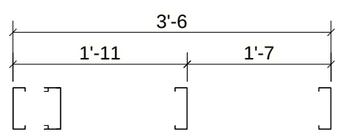


A - A

# BILL OF MATERIAL

| MARK | QTY | DESCRIPTION | LENGTH | WEIGHT | REMARKS |
|---|---|---|---|---|---|
| L21 | 1 | LOAD BEARNING WALL | | | SQ-2 |
| S60 | 1 | 550S162-43 | 11'-7 5/16" | 16.75 | A913-GR.50 |
| BR111 | 1 | 550S162-43 | 5'-10 5/16" | 8.45 | A913-GR.50 |
| BR112 | 1 | 550S162-43 | 5'-10 5/16" | 8.45 | A913-GR.50 |
| BR203 | 1 | 550S162-43 | 1'-10 15/16" | 2.76 | A913-GR.50 |
| BT36 | 1 | 550S162-43 | 3'-6" | 5.05 | A913-GR.50 |
| S59 | 1 | 550S162-43 | 11'-7 5/16" | 16.75 | A913-GR.50 |
| S130 | 1 | 550S162-43 | 11'-7 5/16" | 16.75 | A913-GR.50 |
| TT43 | 1 | 550S162-43 | 3'-6" | 5.05 | A913-GR.50 |
| | | TOTAL WEIGHT THIS DRAWING | | 80 | |

| REV | DESCRIPTION | DATE |
|---|---|---|
| | | |

| | | | |
|---|---|---|---|
| DESCRIPTION | | | |
| PROJECT NAME | | | |
| DRAWN BY | VN | JOB No. | DRG No. |
| DATE DRAWN | 07/19/2024 | | L21 |

Tekla structures

FRONT VIEW

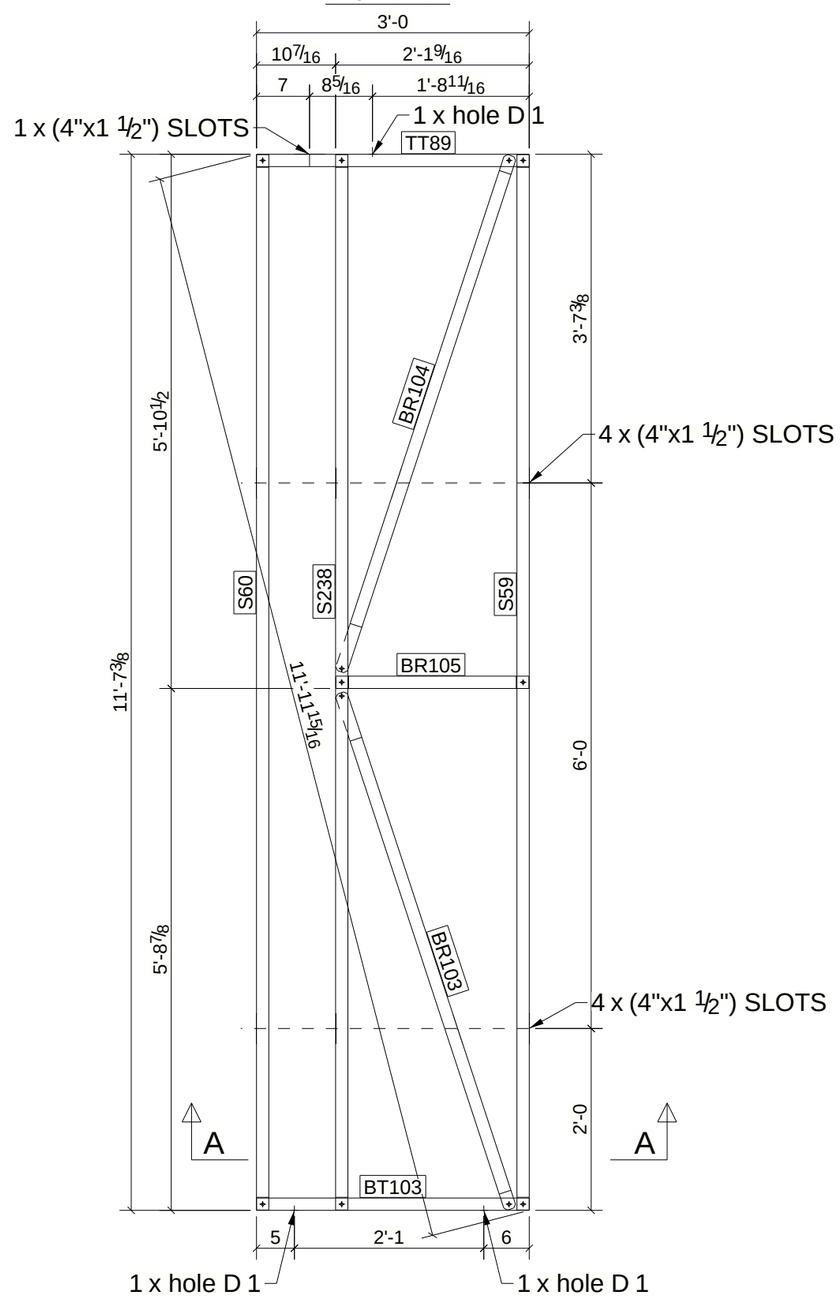


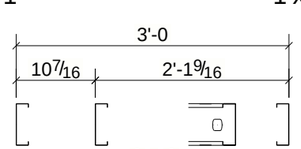


A - A

# BILL OF MATERIAL

| MARK | QTY | DESCRIPTION | LENGTH | WEIGHT | REMARKS |
|---|---|---|---|---|---|
| L22 | 1 | LOAD BEARNING WALL | | | SQ-2 |
| S60 | 1 | 550S162-43 | 11'-7 5/16" | 16.75 | A913-GR.50 |
| BR103 | 1 | 550S162-43 | 5'-11 11/16" | 8.62 | A913-GR.50 |
| BR104 | 1 | 550S162-43 | 5'-11 11/16" | 8.62 | A913-GR.50 |
| BR105 | 1 | 550S162-43 | 2'-1 1/2" | 3.06 | A913-GR.50 |
| BT103 | 1 | 550S162-43 | 3'-0" | 4.33 | A913-GR.50 |
| S59 | 1 | 550S162-43 | 11'-7 5/16" | 16.75 | A913-GR.50 |
| S238 | 1 | 550S162-43 | 11'-7 5/16" | 16.75 | A913-GR.50 |
| TT89 | 1 | 550S162-43 | 3'-0" | 4.33 | A913-GR.50 |
| | | TOTAL WEIGHT THIS DRAWING | | 79 | |

| REV | DESCRIPTION | DATE |
|---|---|---|
| | | |

| | | | |
|---|---|---|---|
| DESCRIPTION | | | |
| PROJECT NAME | | | |
| DRAWN BY | VN | JOB No. | DRG No. |
| DATE DRAWN | 07/19/2024 | | L22 |

Tekla structures

FRONT VIEW

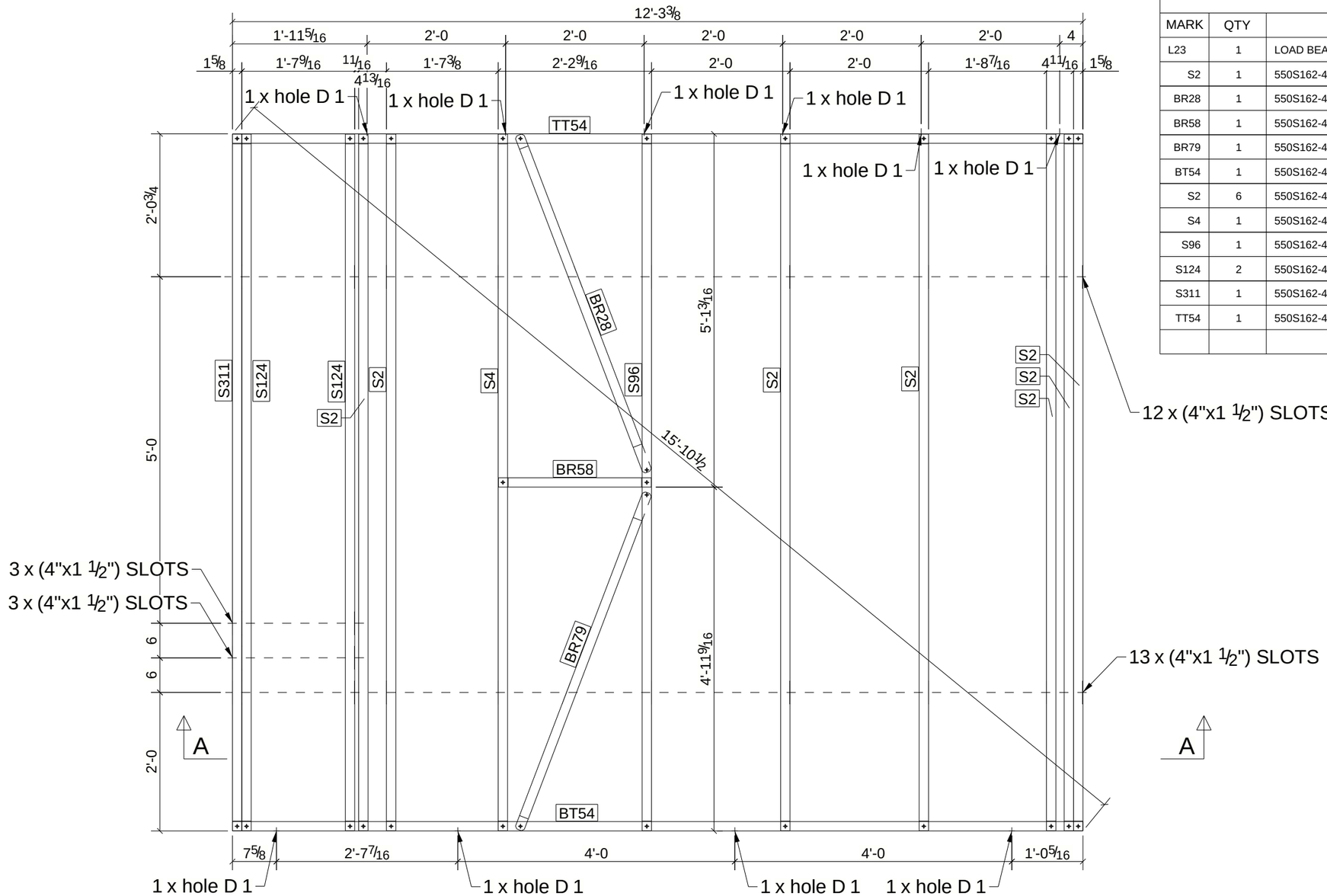


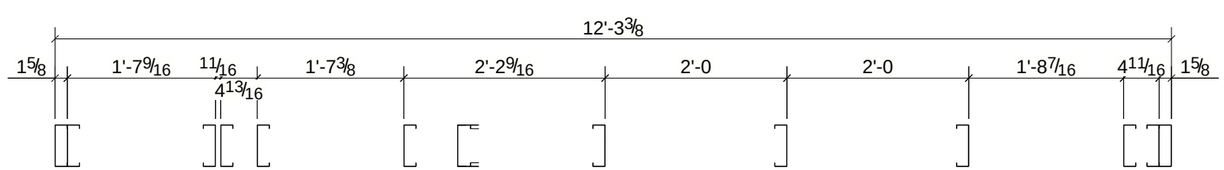


A - A

# BILL OF MATERIAL

| MARK | QTY | DESCRIPTION | LENGTH | WEIGHT | REMARKS |
|---|---|---|---|---|---|
| L23 | 1 | LOAD BEARNING WALL | | | SQ-2 |
| S2 | 1 | 550S162-43 | 10'-0 11/16" | 14.51 | A913-GR.50 |
| BR28 | 1 | 550S162-43 | 5'-2 1/2" | 7.51 | A913-GR.50 |
| BR58 | 1 | 550S162-43 | 2'-2 1/2" | 3.18 | A913-GR.50 |
| BR79 | 1 | 550S162-43 | 5'-2 1/2" | 7.51 | A913-GR.50 |
| BT54 | 1 | 550S162-43 | 12'-3 3/8" | 17.72 | A913-GR.50 |
| S2 | 6 | 550S162-43 | 10'-0 11/16" | 87.06 | A913-GR.50 |
| S4 | 1 | 550S162-43 | 10'-0 11/16" | 14.51 | A913-GR.50 |
| S96 | 1 | 550S162-43 | 10'-0 11/16" | 14.51 | A913-GR.50 |
| S124 | 2 | 550S162-43 | 10'-0 11/16" | 29.02 | A913-GR.50 |
| S311 | 1 | 550S162-43 | 10'-0 11/16" | 14.51 | A913-GR.50 |
| TT54 | 1 | 550S162-43 | 12'-3 3/8" | 17.72 | A913-GR.50 |
| | | TOTAL WEIGHT THIS DRAWING | | 228 | |

| REV | DESCRIPTION | DATE |
|---|---|---|
| | | |

| | | | |
|---|---|---|---|
| DESCRIPTION | | | |
| PROJECT NAME | | | |
| DRAWN BY | | JOB No. | DRG No. |
| DATE DRAWN | 07/19/2024 | | L23 |

Tekla structures

FRONT VIEW

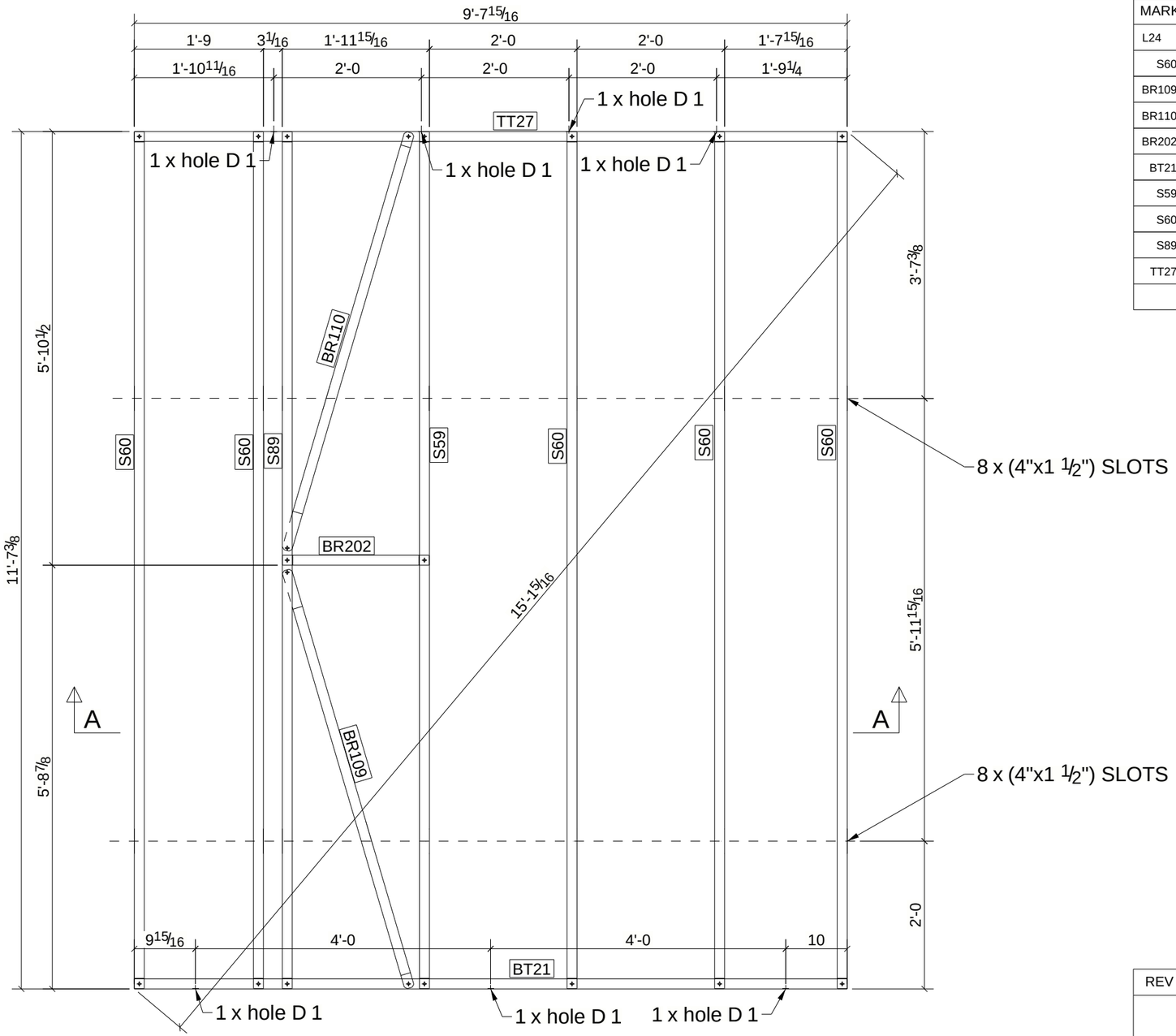


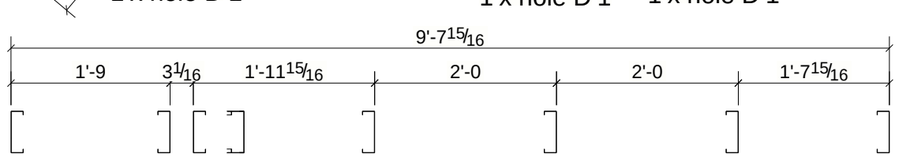


A - A

# BILL OF MATERIAL

| MARK | QTY | DESCRIPTION | LENGTH | WEIGHT | REMARKS |
|---|---|---|---|---|---|
| L24 | 1 | LOAD BEARNING WALL | | | SQ-2 |
| S60 | 1 | 550S162-43 | 11'-7 5/16" | 16.75 | A913-GR.50 |
| BR109 | 1 | 550S162-43 | 5'-10 13/16" | 8.52 | A913-GR.50 |
| BR110 | 1 | 550S162-43 | 5'-10 13/16" | 8.52 | A913-GR.50 |
| BR202 | 1 | 550S162-43 | 1'-11 7/8" | 2.87 | A913-GR.50 |
| BT21 | 1 | 550S162-43 | 9'-7 15/16" | 13.94 | A913-GR.50 |
| S59 | 1 | 550S162-43 | 11'-7 5/16" | 16.75 | A913-GR.50 |
| S60 | 4 | 550S162-43 | 11'-7 5/16" | 67.00 | A913-GR.50 |
| S89 | 1 | 550S162-43 | 11'-7 5/16" | 16.75 | A913-GR.50 |
| TT27 | 1 | 550S162-43 | 9'-7 15/16" | 13.94 | A913-GR.50 |
| | | TOTAL WEIGHT THIS DRAWING | | 165 | |

| REV | DESCRIPTION | DATE |
|---|---|---|
| | | |

| | | | |
|---|---|---|---|
| DESCRIPTION | | | |
| PROJECT NAME | | | |
| DRAWN BY | VN | JOB No. | DRG No. |
| DATE DRAWN | 07/19/2024 | | L24 |

Tekla structures

FRONT VIEW

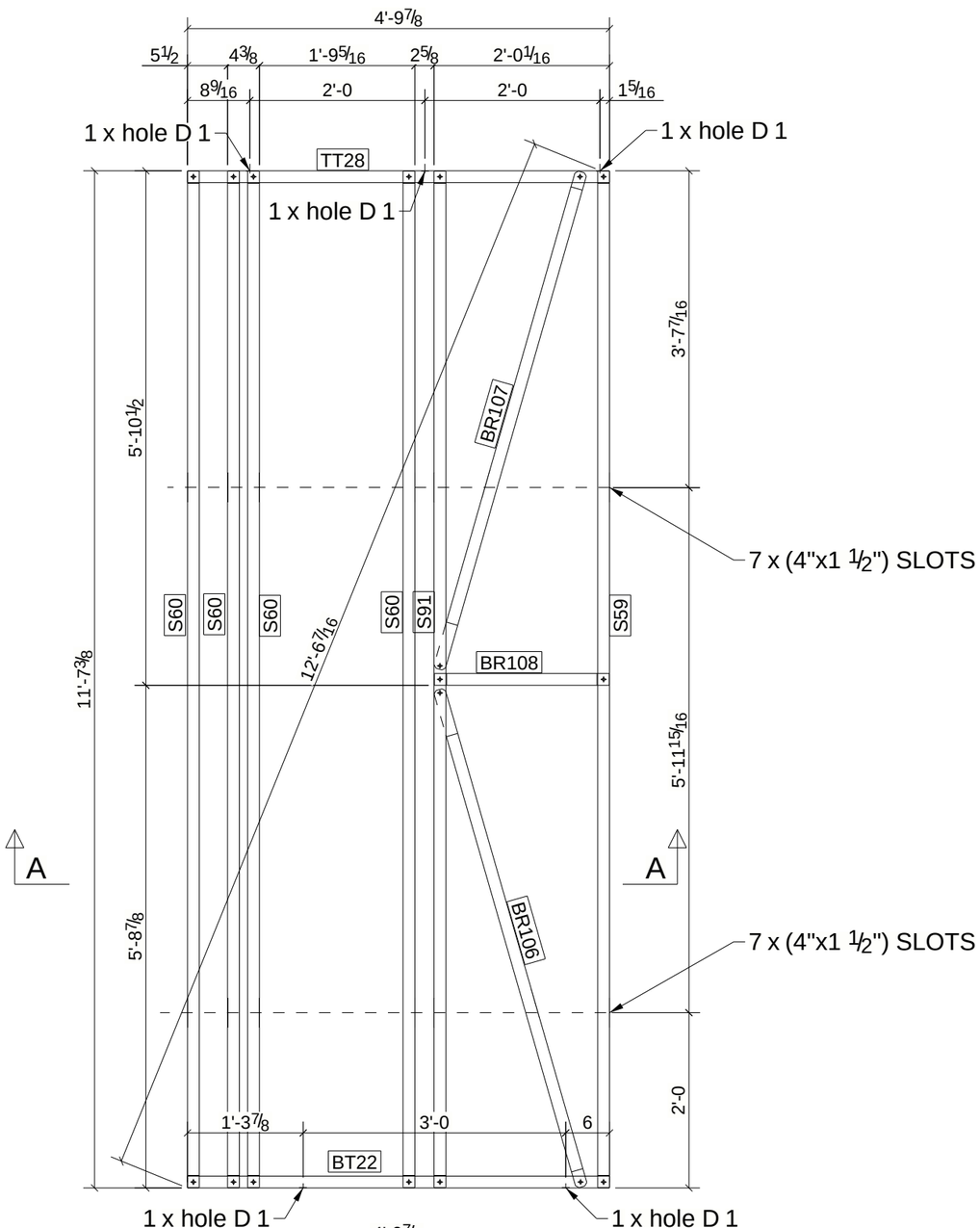


A - A

# BILL OF MATERIAL

| MARK | QTY | DESCRIPTION | LENGTH | WEIGHT | REMARKS |
|---|---|---|---|---|---|
| L25 | 1 | LOAD BEARNING WALL | | | SQ-2 |
| S60 | 1 | 550S162-43 | 11'-7 5/16" | 16.75 | A913-GR.50 |
| BR106 | 1 | 550S162-43 | 5'-10 7/8" | 8.52 | A913-GR.50 |
| BR107 | 1 | 550S162-43 | 5'-10 7/8" | 8.52 | A913-GR.50 |
| BR108 | 1 | 550S162-43 | 2'-0" | 2.88 | A913-GR.50 |
| BT22 | 1 | 550S162-43 | 4'-9 7/8" | 6.96 | A913-GR.50 |
| S59 | 1 | 550S162-43 | 11'-7 5/16" | 16.75 | A913-GR.50 |
| S60 | 3 | 550S162-43 | 11'-7 5/16" | 50.25 | A913-GR.50 |
| S91 | 1 | 550S162-43 | 11'-7 5/16" | 16.75 | A913-GR.50 |
| TT28 | 1 | 550S162-43 | 4'-9 7/8" | 6.96 | A913-GR.50 |
| | | TOTAL WEIGHT THIS DRAWING | | 134 | |

| REV | DESCRIPTION | DATE |
|---|---|---|
| | | |

| | | | |
|---|---|---|---|
| DESCRIPTION | | | |
| PROJECT NAME | | | |
| DRAWN BY | VN | JOB No. | DRG No. |
| DATE DRAWN | 07/19/2024 | | L25 |

Tekla structures

FRONT VIEW

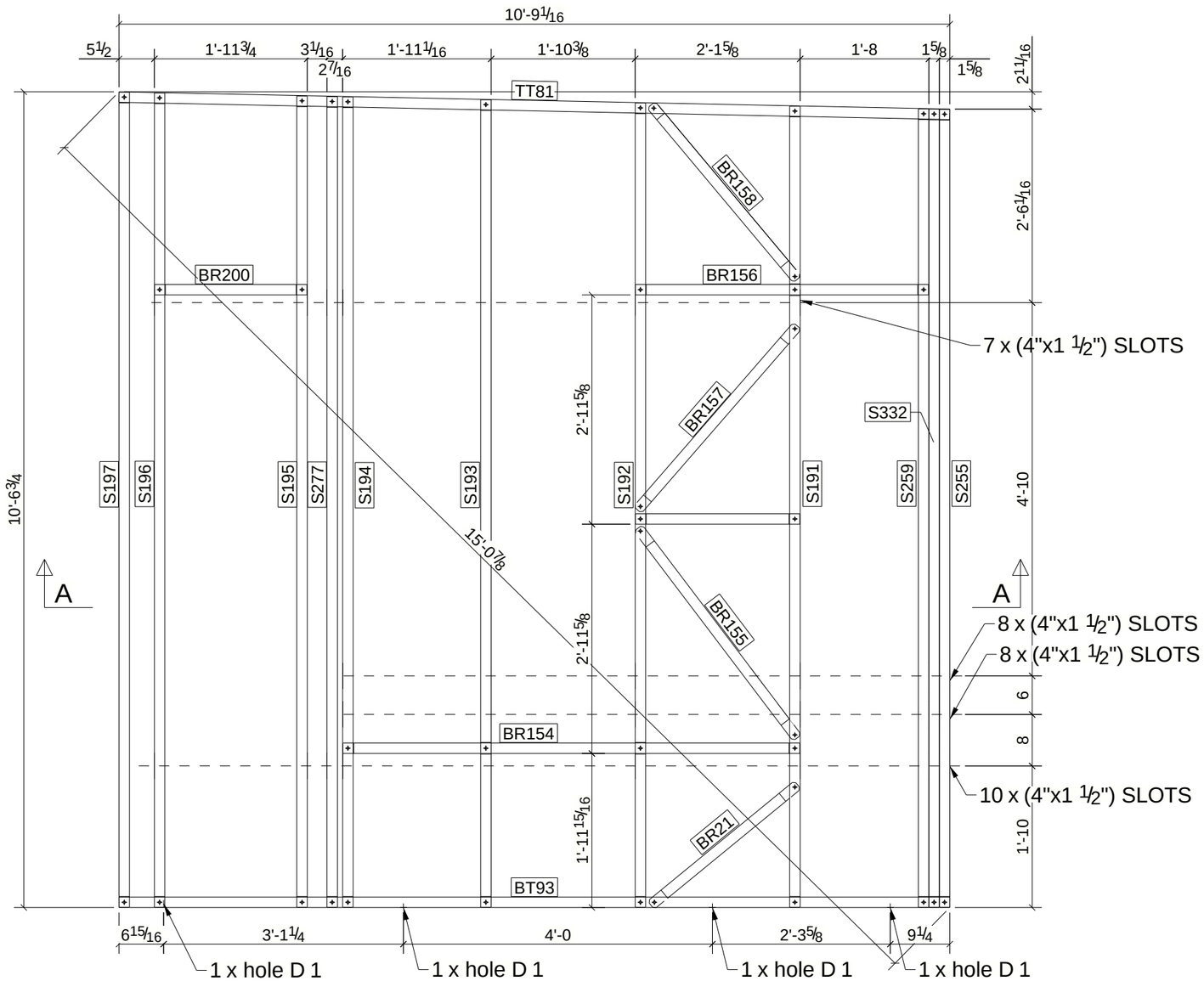


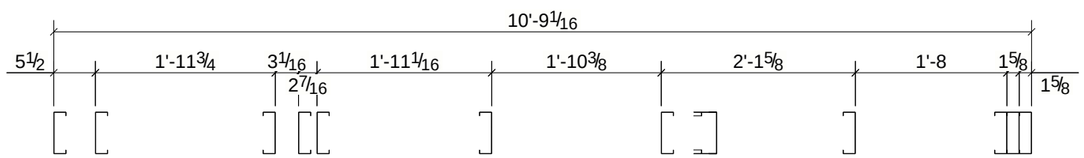


A - A

# BILL OF MATERIAL

| MARK | QTY | DESCRIPTION | LENGTH | WEIGHT | REMARKS |
|---|---|---|---|---|---|
| L26 | 1 | LOAD BEARNING WALL | | | SQ-2 |
| S197 | 1 | 550S162-43 | 10'-6 5/8" | 15.23 | A913-GR.50 |
| BR21 | 1 | 550S162-43 | 2'-5 1/2" | 3.54 | A913-GR.50 |
| BR154 | 1 | 550S162-43 | 5'-11" | 8.53 | A913-GR.50 |
| BR155 | 1 | 550S162-43 | 3'-4 7/8" | 4.92 | A913-GR.50 |
| BR156 | 1 | 550S162-43 | 3'-9 9/16" | 5.48 | A913-GR.50 |
| BR157 | 1 | 550S162-43 | 3'-1 7/8" | 4.55 | A913-GR.50 |
| BR158 | 1 | 550S162-43 | 2'-11 3/8" | 4.25 | A913-GR.50 |
| BR193 | 1 | 550S162-43 | 2'-1 9/16" | 3.07 | A913-GR.50 |
| BR200 | 1 | 550S162-43 | 1'-11 11/16" | 2.85 | A913-GR.50 |
| BT93 | 1 | 550S162-43 | 10'-9 1/16" | 15.52 | A913-GR.50 |
| S191 | 1 | 550S162-43 | 10'-4 7/16" | 14.97 | A913-GR.50 |
| S192 | 1 | 550S162-43 | 10'-4 15/16" | 15.03 | A913-GR.50 |
| S193 | 1 | 550S162-43 | 10'-5 7/16" | 15.09 | A913-GR.50 |
| S194 | 1 | 550S162-43 | 10'-5 15/16" | 15.14 | A913-GR.50 |
| S195 | 1 | 550S162-43 | 10'-6 1/16" | 15.16 | A913-GR.50 |
| S196 | 1 | 550S162-43 | 10'-6 1/2" | 15.21 | A913-GR.50 |
| S255 | 1 | 550S162-43 | 10'-4" | 14.91 | A913-GR.50 |
| S259 | 1 | 550S162-43 | 10'-4 1/16" | 14.92 | A913-GR.50 |
| S277 | 1 | 550S162-43 | 10'-5 15/16" | 15.15 | A913-GR.50 |
| S332 | 1 | 550S162-43 | 10'-4" | 14.91 | A913-GR.50 |
| TT81 | 1 | 550S162-43 | 10'-9 1/16" | 15.52 | A913-GR.50 |
| | | TOTAL WEIGHT THIS DRAWING | | 234 | |

| REV | DESCRIPTION | DATE |
|---|---|---|
| | | |

| | | | |
|---|---|---|---|
| DESCRIPTION | | | |
| PROJECT NAME | | | |
| DRAWN BY | VN | JOB No. | DRG No. |
| DATE DRAWN | 07/19/2024 | | L26 |

Tekla structures

FRONT VIEW

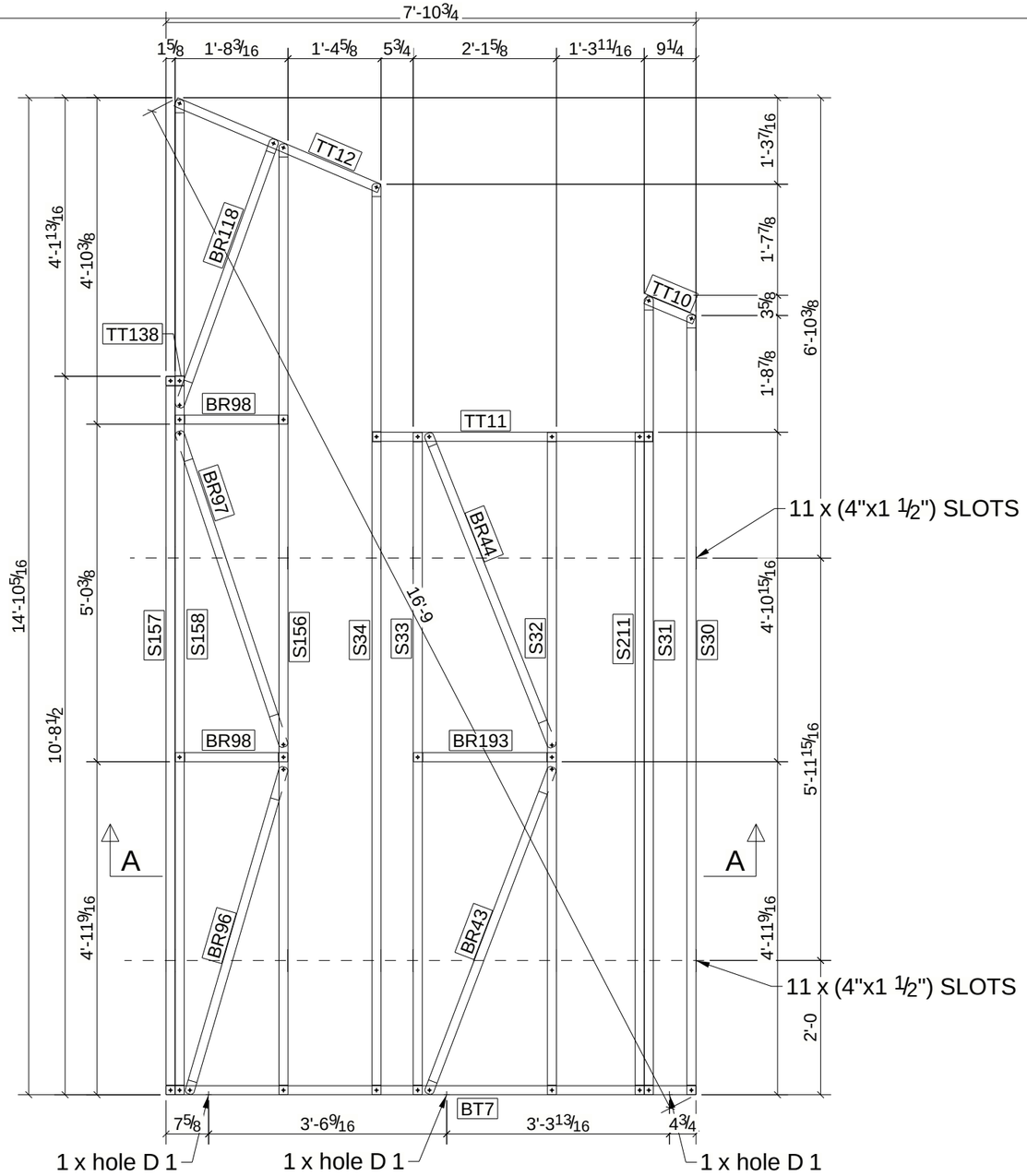


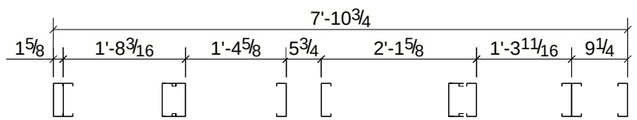


A - A

# BILL OF MATERIAL

| MARK | QTY | DESCRIPTION | LENGTH | WEIGHT | REMARKS |
|---|---|---|---|---|---|
| L27 | 1 | LOAD BEARNING WALL | | | SQ-2 |
| S34 | 1 | 550S162-43 | 13'-6 15/16" | 19.59 | A913-GR.50 |
| BR43 | 1 | 550S162-43 | 5'-2 1/2" | 7.51 | A913-GR.50 |
| BR44 | 1 | 550S162-43 | 5'-0 3/8" | 7.26 | A913-GR.50 |
| BR96 | 1 | 550S162-43 | 5'-0 7/8" | 7.32 | A913-GR.50 |
| BR97 | 1 | 550S162-43 | 4'-11 1/2" | 7.15 | A913-GR.50 |
| BR98 | 2 | 550S162-43 | 1'-8 1/8" | 4.84 | A913-GR.50 |
| BR118 | 1 | 550S162-43 | 4'-2 7/8" | 6.12 | A913-GR.50 |
| BR193 | 1 | 550S162-43 | 2'-1 9/16" | 3.07 | A913-GR.50 |
| BT7 | 1 | 550S162-43 | 7'-10 3/4" | 11.39 | A913-GR.50 |
| S30 | 1 | 550S162-43 | 11'-7 7/16" | 16.77 | A913-GR.50 |
| S31 | 1 | 550S162-43 | 11'-10 5/8" | 17.15 | A913-GR.50 |
| S32 | 1 | 550S162-43 | 9'-10 7/16" | 14.24 | A913-GR.50 |
| S33 | 1 | 550S162-43 | 9'-10 7/16" | 14.24 | A913-GR.50 |
| S156 | 1 | 550S162-43 | 14'-2" | 20.44 | A913-GR.50 |
| S157 | 1 | 550S162-43 | 10'-8 7/16" | 15.44 | A913-GR.50 |
| S158 | 1 | 550S162-43 | 14'-9 15/16" | 21.39 | A913-GR.50 |
| S211 | 1 | 550S162-43 | 9'-10 7/16" | 14.24 | A913-GR.50 |
| TT10 | 1 | 550S162-43 | 0'-9 3/8" | 1.13 | A913-GR.50 |
| TT11 | 1 | 550S162-43 | 4'-2 1/16" | 6.02 | A913-GR.50 |
| TT12 | 1 | 550S162-43 | 3'-3 1/2" | 4.75 | A913-GR.50 |
| TT138 | 1 | 550S162-43 | 0'-3 1/4" | 0.39 | A913-GR.50 |
| | | TOTAL WEIGHT THIS DRAWING | | 220 | |

| REV | DESCRIPTION | DATE |
|---|---|---|
| | | |

| | | | |
|---|---|---|---|
| DESCRIPTION | | | |
| PROJECT NAME | | | |
| DRAWN BY | VN | JOB No. | DRG No. |
| DATE DRAWN | 07/19/2024 | | L27 |

Tekla structures

FRONT VIEW

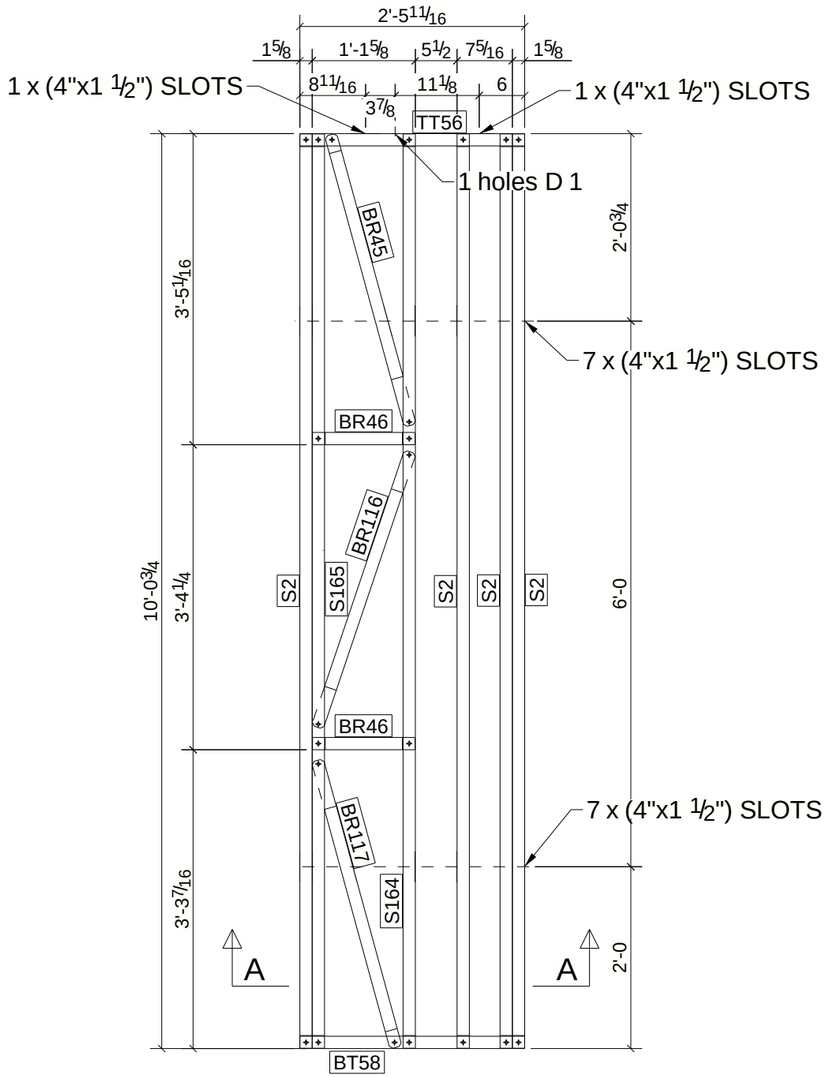


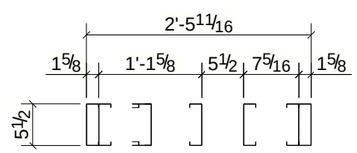


A - A

# BILL OF MATERIAL

| MARK | QTY | DESCRIPTION | LENGTH | WEIGHT | REMARKS |
|---|---|---|---|---|---|
| L28 | 1 | LOAD BEARNING WALL | | | SQ-2 |
| S2 | 1 | 550S162-43 | 10'-0 11/16" | 14.51 | A913-GR.50 |
| BR45 | 1 | 550S162-43 | 3'-3 3/4" | 4.78 | A913-GR.50 |
| BR46 | 2 | 550S162-43 | 1'-1 1/2" | 3.25 | A913-GR.50 |
| BR116 | 1 | 550S162-43 | 3'-2 3/8" | 4.61 | A913-GR.50 |
| BR117 | 1 | 550S162-43 | 3'-3 1/4" | 4.72 | A913-GR.50 |
| BT58 | 1 | 550S162-43 | 2'-5 11/16" | 3.57 | A913-GR.50 |
| S2 | 3 | 550S162-43 | 10'-0 11/16" | 43.53 | A913-GR.50 |
| S164 | 1 | 550S162-43 | 10'-0 11/16" | 14.51 | A913-GR.50 |
| S165 | 1 | 550S162-43 | 10'-0 11/16" | 14.51 | A913-GR.50 |
| TT56 | 1 | 550S162-43 | 2'-5 11/16" | 3.57 | A913-GR.50 |
| | | TOTAL WEIGHT THIS DRAWING | | 112 | |

| REV | DESCRIPTION | DATE |
|---|---|---|
| | | |

| | | | |
|---|---|---|---|
| DESCRIPTION | | | |
| PROJECT NAME | | | |
| DRAWN BY | VN | JOB No. | DRG No. |
| DATE DRAWN | 07/19/2024 | | L28 |

Tekla structures

FRONT VIEW

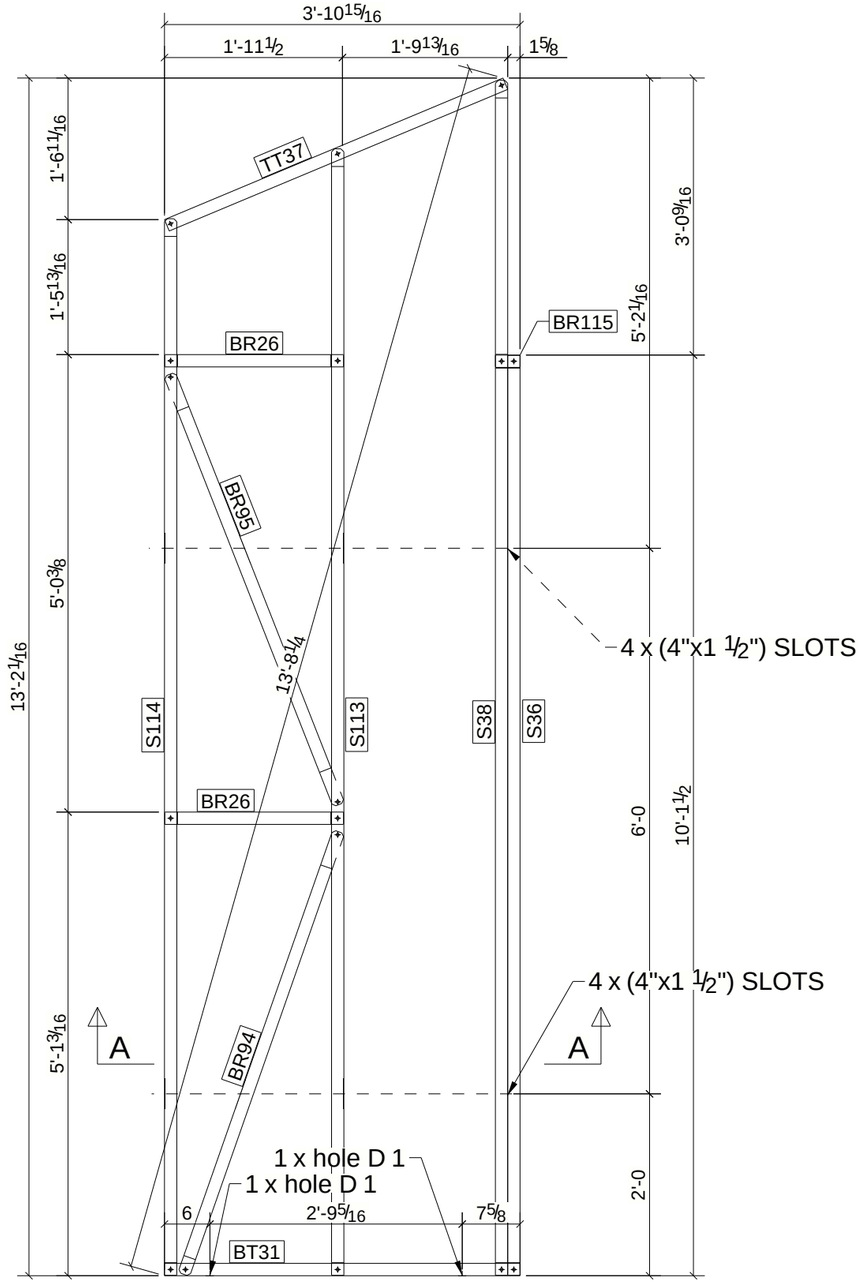


A - A

# BILL OF MATERIAL

| MARK | QTY | DESCRIPTION | LENGTH | WEIGHT | REMARKS |
|---|---|---|---|---|---|
| L29 | 1 | LOAD BEARNING WALL | | | SQ-2 |
| S38 | 1 | 550S162-43 | 13'-1 11/16" | 18.97 | A913-GR.50 |
| BR26 | 2 | 550S162-43 | 1'-11 9/16" | 5.67 | A913-GR.50 |
| BR94 | 1 | 550S162-43 | 5'-1 7/8" | 7.44 | A913-GR.50 |
| BR95 | 1 | 550S162-43 | 5'-1" | 7.34 | A913-GR.50 |
| BR115 | 1 | 550S162-43 | 0'-3 1/4" | 0.39 | A913-GR.50 |
| BT31 | 1 | 550S162-43 | 3'-10 15/16" | 5.64 | A913-GR.50 |
| S36 | 1 | 550S162-43 | 10'-1 7/16" | 14.60 | A913-GR.50 |
| S113 | 1 | 550S162-43 | 12'-4 11/16" | 17.88 | A913-GR.50 |
| S114 | 1 | 550S162-43 | 11'-7 7/16" | 16.77 | A913-GR.50 |
| TT37 | 1 | 550S162-43 | 4'-0 7/16" | 5.82 | A913-GR.50 |
| | | TOTAL WEIGHT THIS DRAWING | | 101 | |

| REV | DESCRIPTION | DATE |
|---|---|---|
| | | |

| | | | |
|---|---|---|---|
| DESCRIPTION | | | |
| PROJECT NAME | | | |
| DRAWN BY | VN | JOB No. | DRG No. |
| DATE DRAWN | 07/19/2024 | | L29 |

Tekla structures

# BILL OF MATERIAL

| MARK | QTY | DESCRIPTION | LENGTH | WEIGHT | REMARKS |
|---|---|---|---|---|---|
| L30 | 1 | LOAD BEARNING WALL | | | SQ-2 |
| S342 | 1 | 550S162-43 | 5'-5 7/16" | 7.87 | A913-GR.50 |
| BT133 | 1 | 550S162-43 | 10'-6 1/8" | 15.17 | A913-GR.50 |
| S341 | 1 | 550S162-43 | 4'-11" | 7.09 | A913-GR.50 |
| S342 | 1 | 550S162-43 | 5'-5 1/2" | 7.87 | A913-GR.50 |
| S343 | 1 | 550S162-43 | 5'-3 7/8" | 7.68 | A913-GR.50 |
| S344 | 1 | 550S162-43 | 4'-7 3/8" | 6.66 | A913-GR.50 |
| S345 | 1 | 550S162-43 | 3'-10 7/8" | 5.64 | A913-GR.50 |
| S346 | 1 | 550S162-43 | 3'-2 3/8" | 4.62 | A913-GR.50 |
| S351 | 1 | 550S162-43 | 2'-5 15/16" | 3.60 | A913-GR.50 |
| S352 | 1 | 550S162-43 | 4'-2 1/8" | 6.02 | A913-GR.50 |
| TT13 | 1 | 550S162-43 | 3'-4 3/16" | 4.83 | A913-GR.50 |
| TT147 | 1 | 550S162-43 | 7'-11 1/16" | 11.43 | A913-GR.50 |
| | | TOTAL WEIGHT THIS DRAWING | | 88 | |

FRONT VIEW

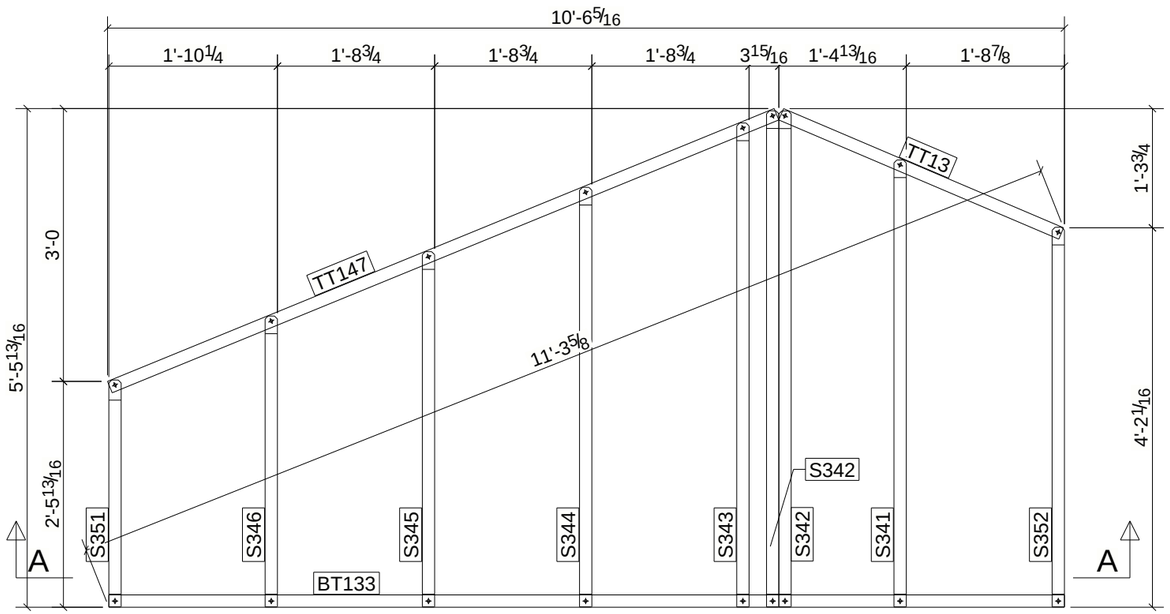


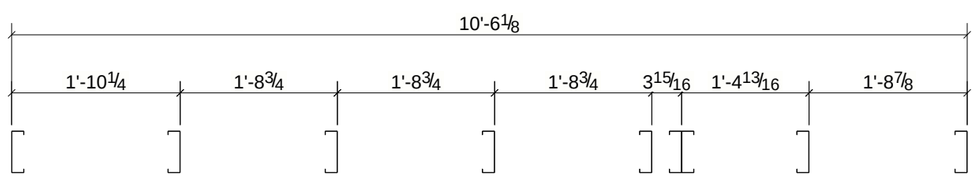


A - A

| REV | DESCRIPTION | DATE |
|---|---|---|
| | | |

| | | | |
|---|---|---|---|
| DESCRIPTION | | | |
| PROJECT NAME | | | |
| DRAWN BY | | JOB No. | DRG No. |
| DATE DRAWN | 07/11/2024 | | L30 |

Tekla structures

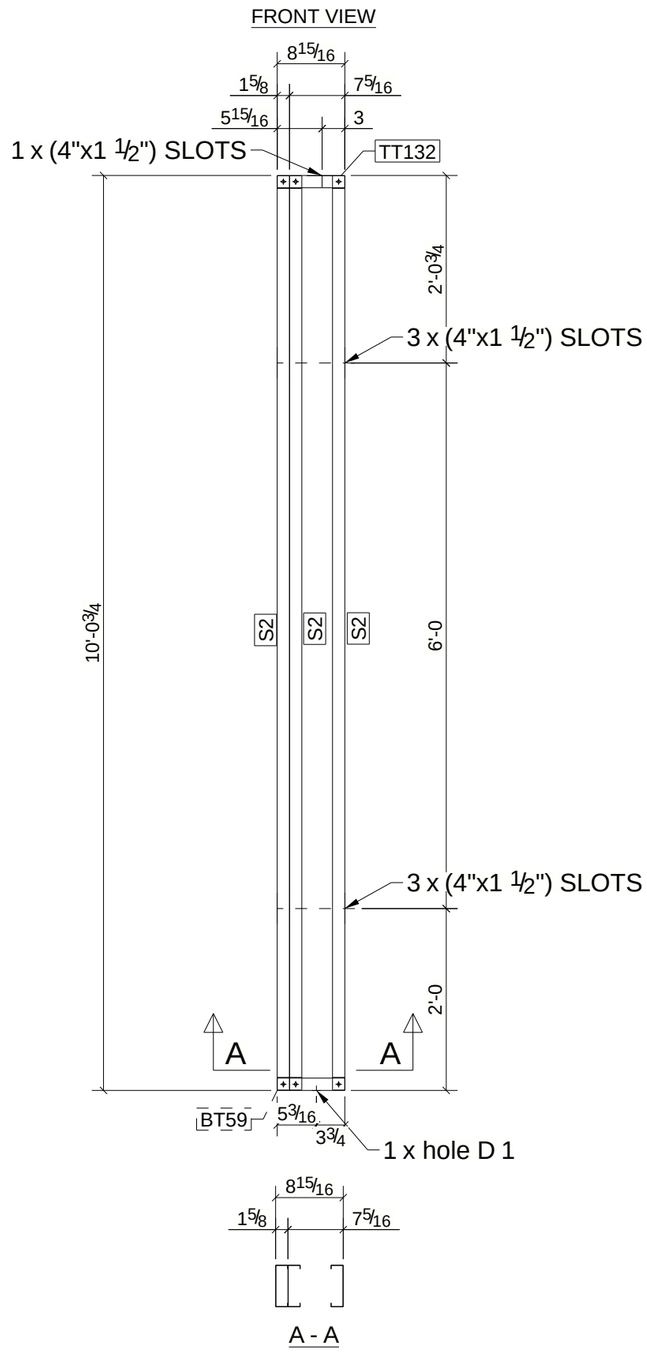


# BILL OF MATERIAL

| MARK | QTY | DESCRIPTION | LENGTH | WEIGHT | REMARKS |
|---|---|---|---|---|---|
| L31 | 1 | LOAD BEARNING WALL | | | SQ-2 |
| S2 | 1 | 550S162-43 | 10'-0 11/16" | 14.51 | A913-GR.50 |
| BT59 | 1 | 550S162-43 | 0'-8 15/16" | 1.07 | A913-GR.50 |
| S2 | 2 | 550S162-43 | 10'-0 11/16" | 29.02 | A913-GR.50 |
| TT132 | 1 | 550S162-43 | 0'-8 15/16" | 1.07 | A913-GR.50 |
| | | TOTAL WEIGHT THIS DRAWING | | 46 | |

| REV | DESCRIPTION | DATE |
|---|---|---|
| | | |

| | | | |
|---|---|---|---|
| DESCRIPTION | | | |
| PROJECT NAME | | | |
| DRAWN BY | VN | JOB No. | DRG No. |
| DATE DRAWN | 07/19/2024 | | L31 |

Tekla structures

FRONT VIEW

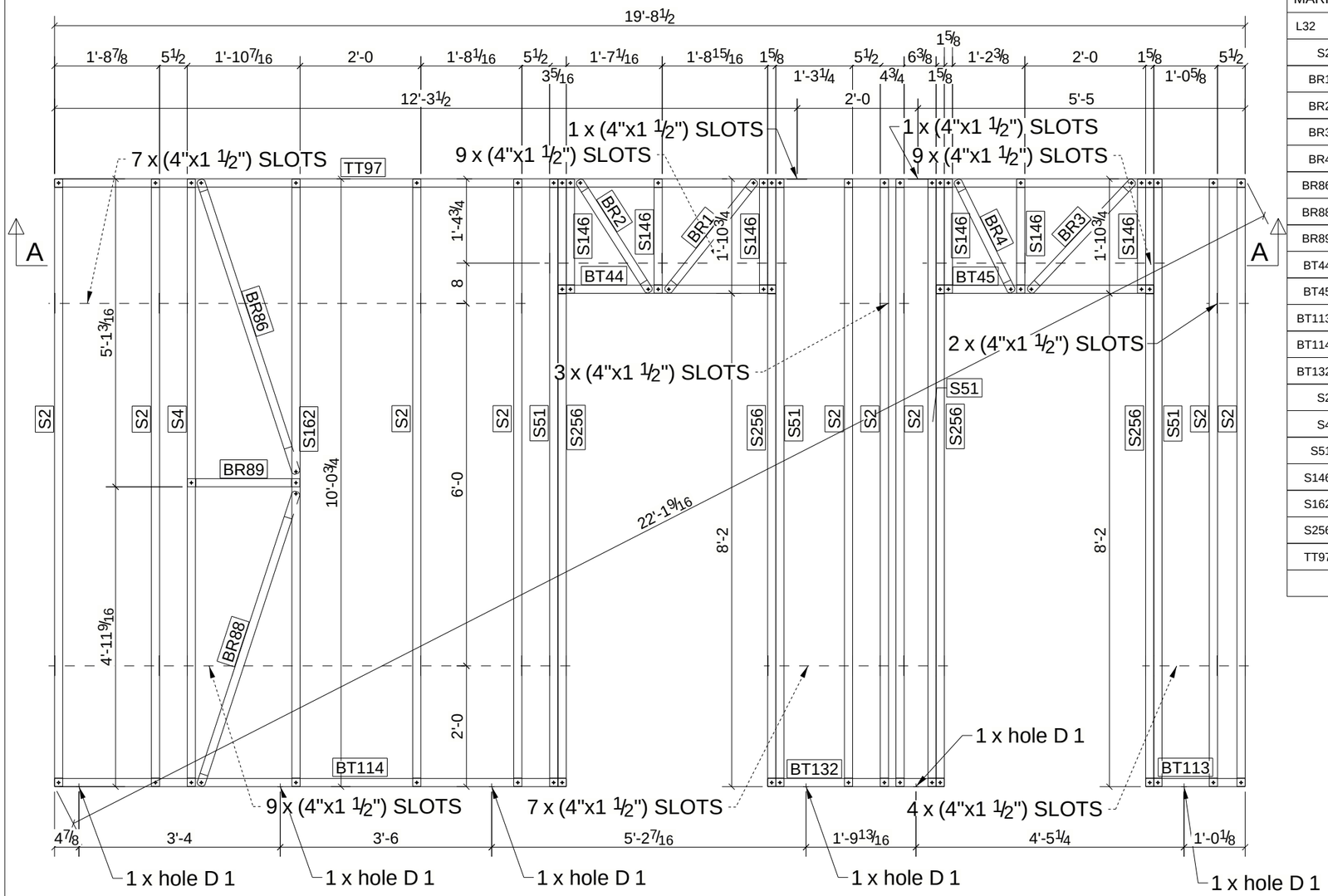


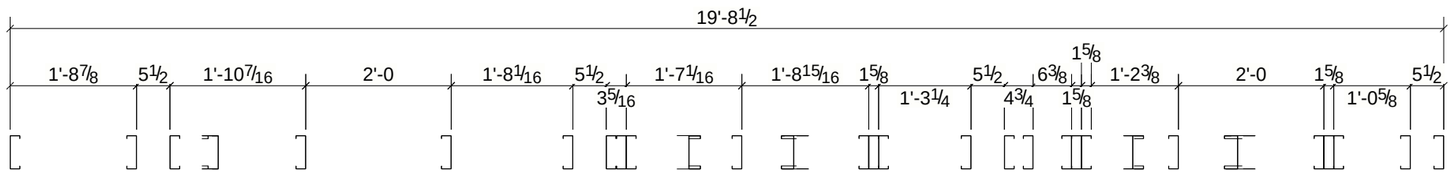


A - A

# BILL OF MATERIAL

| MARK | QTY | DESCRIPTION | LENGTH | WEIGHT | REMARKS |
|---|---|---|---|---|---|
| L32 | 1 | LOAD BEARNING WALL | | | SQ-2 |
| S2 | 1 | 550S162-43 | 10'-0 11/16" | 14.51 | A913-GR.50 |
| BR1 | 1 | 550S162-43 | 2'-4 5/16" | 3.40 | A913-GR.50 |
| BR2 | 1 | 550S162-43 | 2'-2 3/8" | 3.17 | A913-GR.50 |
| BR3 | 1 | 550S162-43 | 2'-6 5/16" | 3.65 | A913-GR.50 |
| BR4 | 1 | 550S162-43 | 2'-0 7/8" | 2.99 | A913-GR.50 |
| BR86 | 1 | 550S162-43 | 5'-1 1/2" | 7.39 | A913-GR.50 |
| BR88 | 1 | 550S162-43 | 5'-1 1/2" | 7.39 | A913-GR.50 |
| BR89 | 1 | 550S162-43 | 1'-10 5/16" | 2.68 | A913-GR.50 |
| BT44 | 1 | 550S162-43 | 3'-7 1/4" | 5.20 | A913-GR.50 |
| BT45 | 1 | 550S162-43 | 3'-7 1/4" | 5.20 | A913-GR.50 |
| BT113 | 1 | 550S162-43 | 1'-7 3/4" | 2.37 | A913-GR.50 |
| BT114 | 1 | 550S162-43 | 8'-5 11/16" | 12.22 | A913-GR.50 |
| BT132 | 1 | 550S162-43 | 2'-11 1/16" | 4.22 | A913-GR.50 |
| S2 | 8 | 550S162-43 | 10'-0 11/16" | 116.08 | A913-GR.50 |
| S4 | 1 | 550S162-43 | 10'-0 11/16" | 14.51 | A913-GR.50 |
| S51 | 4 | 550S162-43 | 10'-0 11/16" | 58.04 | A913-GR.50 |
| S146 | 6 | 550S162-43 | 1'-10 11/16" | 16.35 | A913-GR.50 |
| S162 | 1 | 550S162-43 | 10'-0 11/16" | 14.51 | A913-GR.50 |
| S256 | 4 | 550S162-43 | 10'-0 11/16" | 58.04 | A913-GR.50 |
| TT97 | 1 | 550S162-43 | 19'-8 1/2" | 28.44 | A913-GR.50 |
| | | TOTAL WEIGHT THIS DRAWING | | 380 | |

| REV | DESCRIPTION | DATE |
|---|---|---|
| | | |

| | | | |
|---|---|---|---|
| DESCRIPTION | | | |
| PROJECT NAME | | | |
| DRAWN BY | VN | JOB No. | DRG No. |
| DATE DRAWN | 07/19/2024 | | L32 |

Tekla structures

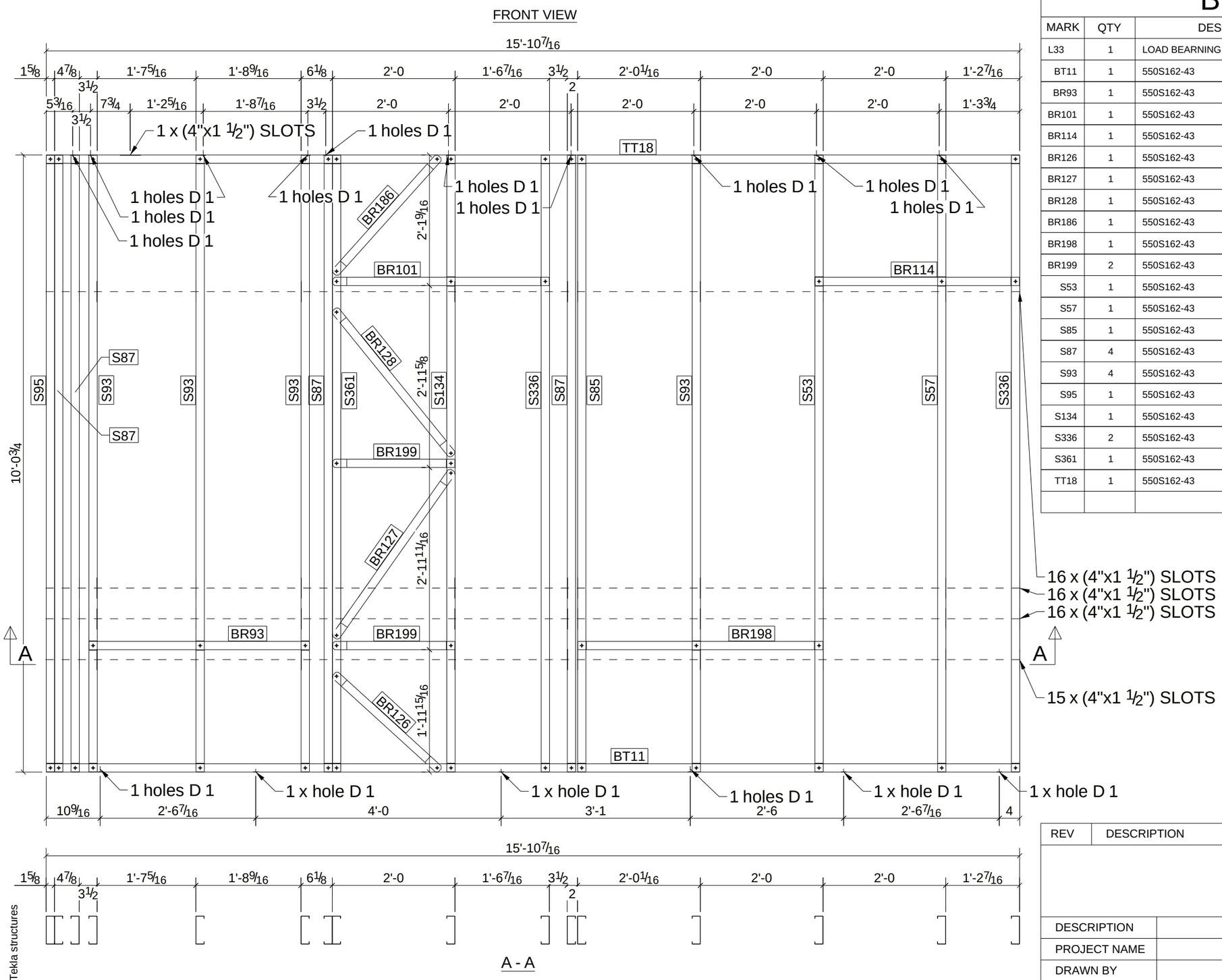


# BILL OF MATERIAL

| MARK | QTY | DESCRIPTION | LENGTH | WEIGHT | REMARKS |
|---|---|---|---|---|---|
| L33 | 1 | LOAD BEARNING WALL | | | SQ-2 |
| BT11 | 1 | 550S162-43 | 15'-10 7/16" | 22.90 | A913-GR.50 |
| BR93 | 1 | 550S162-43 | 3'-7 1/8" | 5.19 | A913-GR.50 |
| BR101 | 1 | 550S162-43 | 3'-6 3/8" | 5.10 | A913-GR.50 |
| BR114 | 1 | 550S162-43 | 3'-4" | 4.81 | A913-GR.50 |
| BR126 | 1 | 550S162-43 | 2'-4" | 3.36 | A913-GR.50 |
| BR127 | 1 | 550S162-43 | 3'-4 1/16" | 4.82 | A913-GR.50 |
| BR128 | 1 | 550S162-43 | 3'-0 13/16" | 4.43 | A913-GR.50 |
| BR186 | 1 | 550S162-43 | 2'-6 13/16" | 3.70 | A913-GR.50 |
| BR198 | 1 | 550S162-43 | 3'-11 15/16" | 5.77 | A913-GR.50 |
| BR199 | 2 | 550S162-43 | 1'-11 15/16" | 5.75 | A913-GR.50 |
| S53 | 1 | 550S162-43 | 10'-0 11/16" | 14.51 | A913-GR.50 |
| S57 | 1 | 550S162-43 | 10'-0 11/16" | 14.51 | A913-GR.50 |
| S85 | 1 | 550S162-43 | 10'-0 11/16" | 14.51 | A913-GR.50 |
| S87 | 4 | 550S162-43 | 10'-0 11/16" | 58.04 | A913-GR.50 |
| S93 | 4 | 550S162-43 | 10'-0 11/16" | 58.04 | A913-GR.50 |
| S95 | 1 | 550S162-43 | 10'-0 11/16" | 14.51 | A913-GR.50 |
| S134 | 1 | 550S162-43 | 10'-0 11/16" | 14.51 | A913-GR.50 |
| S336 | 2 | 550S162-43 | 10'-0 11/16" | 29.02 | A913-GR.50 |
| S361 | 1 | 550S162-43 | 10'-0 11/16" | 14.51 | A913-GR.50 |
| TT18 | 1 | 550S162-43 | 15'-10 7/16" | 22.90 | A913-GR.50 |
| | | TOTAL WEIGHT THIS DRAWING | | 321 | |

| REV | DESCRIPTION | DATE |
|---|---|---|
| | | |

| | | | |
|---|---|---|---|
| DESCRIPTION | | | |
| PROJECT NAME | | | |
| DRAWN BY | | JOB No. | DRG No. |
| DATE DRAWN | 07/19/2024 | | L33 |

# BILL OF MATERIAL

| MARK | QTY | DESCRIPTION | LENGTH | WEIGHT | REMARKS |
|---|---|---|---|---|---|
| L34 | 1 | LOAD BEARNING WALL | | | SQ-2 |
| S49 | 1 | 550S162-43 | 10'-0 11/16" | 14.51 | A913-GR.50 |
| BR14 | 2 | 550S162-43 | 2'-2 11/16" | 6.41 | A913-GR.50 |
| BR32 | 1 | 550S162-43 | 3'-5 5/16" | 4.96 | A913-GR.50 |
| BR33 | 1 | 550S162-43 | 1'-8 1/2" | 2.47 | A913-GR.50 |
| BR34 | 1 | 550S162-43 | 1'-11 9/16" | 2.83 | A913-GR.50 |
| BR35 | 1 | 550S162-43 | 2'-6 3/16" | 3.63 | A913-GR.50 |
| BR55 | 1 | 550S162-43 | 3'-3 11/16" | 4.77 | A913-GR.50 |
| BR60 | 1 | 550S162-43 | 1'-9 1/16" | 2.53 | A913-GR.50 |
| BR62 | 1 | 550S162-43 | 1'-7 7/8" | 2.39 | A913-GR.50 |
| BR63 | 1 | 550S162-43 | 2'-0 1/8" | 2.90 | A913-GR.50 |
| BR64 | 1 | 550S162-43 | 1'-5 1/2" | 2.11 | A913-GR.50 |
| BR102 | 1 | 550S162-43 | 3'-10 5/16" | 5.57 | A913-GR.50 |
| BR137 | 1 | 550S162-43 | 2'-1 1/2" | 3.07 | A913-GR.50 |
| BR187 | 1 | 550S162-43 | 2'-8 5/8" | 3.92 | A913-GR.50 |
| BT3 | 1 | 550S162-43 | 19'-7" | 28.26 | A913-GR.50 |
| S8 | 2 | 550S162-43 | 8'-1 7/16" | 23.43 | A913-GR.50 |
| S9 | 1 | 550S162-43 | 10'-0 11/16" | 14.51 | A913-GR.50 |
| S10 | 1 | 550S162-43 | 10'-0 11/16" | 14.51 | A913-GR.50 |
| S53 | 1 | 550S162-43 | 10'-0 11/16" | 14.51 | A913-GR.50 |
| S57 | 1 | 550S162-43 | 10'-0 11/16" | 14.51 | A913-GR.50 |
| S58 | 2 | 550S162-43 | 10'-0 11/16" | 29.02 | A913-GR.50 |
| S85 | 5 | 550S162-43 | 10'-0 11/16" | 72.55 | A913-GR.50 |
| S87 | 2 | 550S162-43 | 10'-0 11/16" | 29.02 | A913-GR.50 |
| S94 | 1 | 550S162-43 | 10'-0 11/16" | 14.51 | A913-GR.50 |
| S111 | 2 | 550S162-43 | 10'-0 11/16" | 29.02 | A913-GR.50 |
| S336 | 2 | 550S162-43 | 10'-0 11/16" | 29.02 | A913-GR.50 |
| S355 | 1 | 550S162-43 | 10'-0 11/16" | 14.51 | A913-GR.50 |
| TT5 | 1 | 550S162-43 | 0'-6 1/2" | 0.78 | A913-GR.50 |
| TT6 | 1 | 550S162-43 | 19'-3 3/4" | 27.87 | A913-GR.50 |
| | | TOTAL WEIGHT THIS DRAWING | | 418 | |

FRONT VIEW

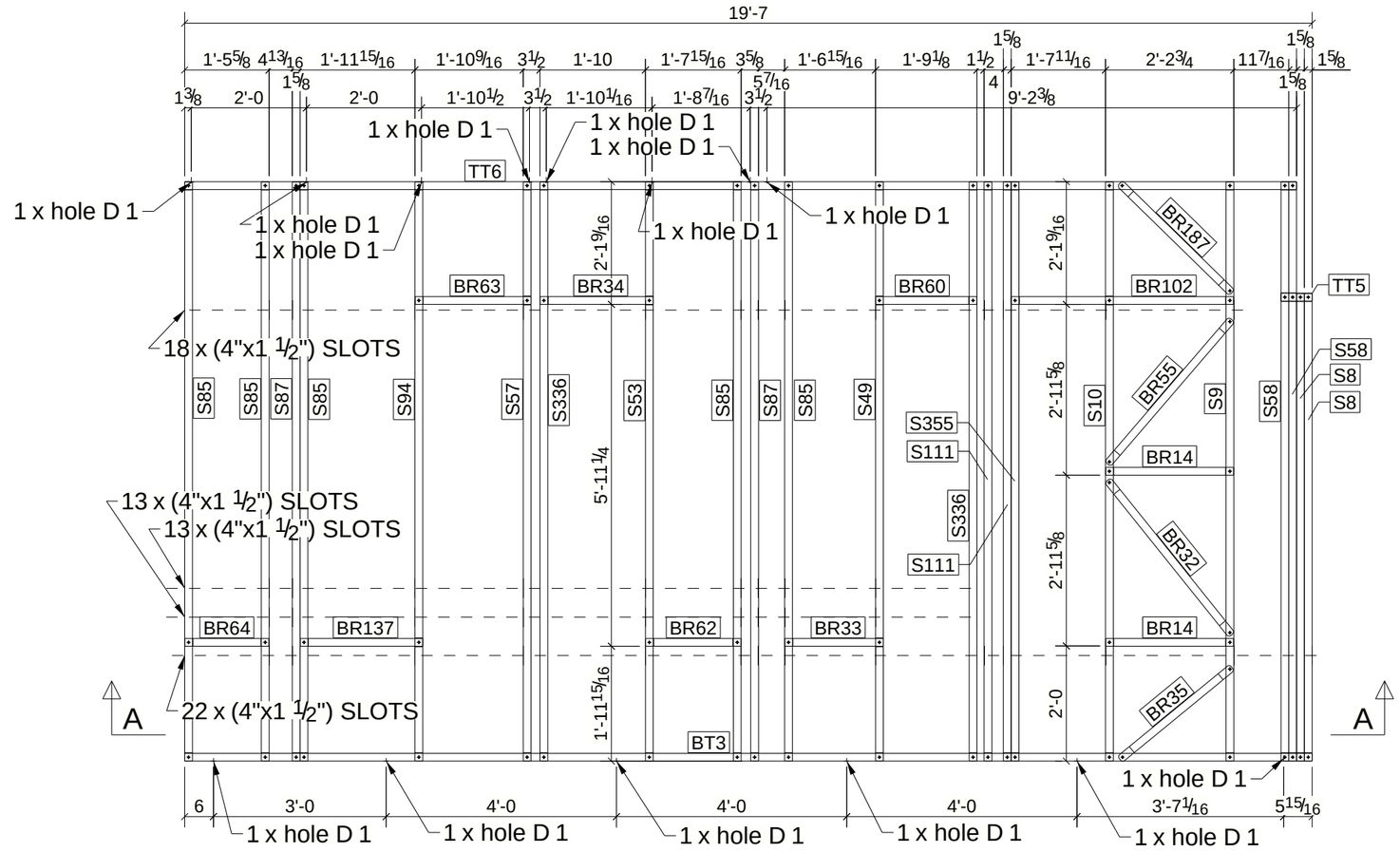


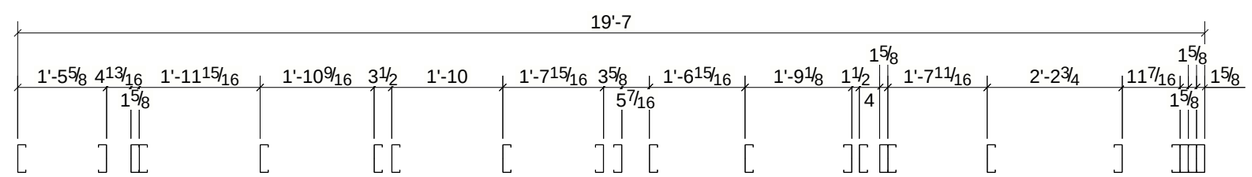


A - A

| REV | DESCRIPTION | DATE |
|---|---|---|
| | | |

| | | | |
|---|---|---|---|
| DESCRIPTION | | | |
| PROJECT NAME | | | |
| DRAWN BY | VN | JOB No. | DRG No. |
| DATE DRAWN | 06/08/2024 | | L34 |

Tekla structures

FRONT VIEW

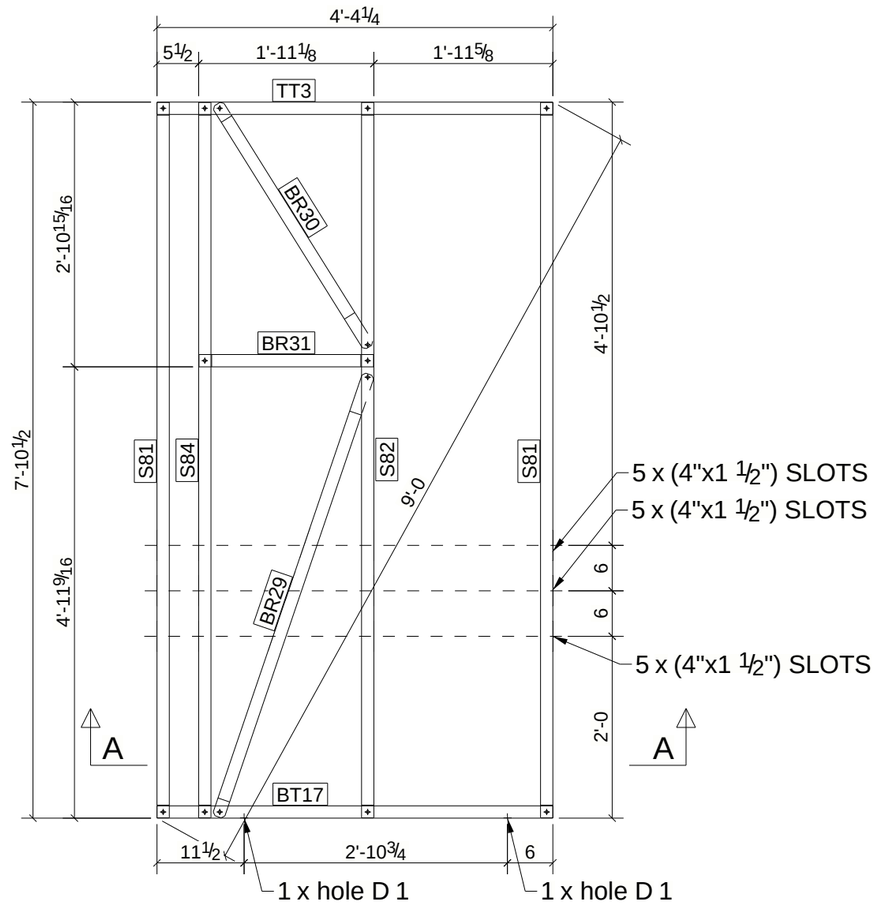


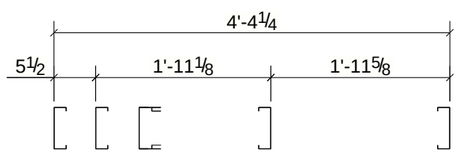


A - A

# BILL OF MATERIAL

| MARK | QTY | DESCRIPTION | LENGTH | WEIGHT | REMARKS |
|---|---|---|---|---|---|
| L35 | 1 | LOAD BEARNING WALL | | | SQ-2 |
| S81 | 1 | 550S162-43 | 7'-10 7/16" | 11.35 | A913-GR.50 |
| BR29 | 1 | 550S162-43 | 5'-1 11/16" | 7.42 | A913-GR.50 |
| BR30 | 1 | 550S162-43 | 3'-1 13/16" | 4.54 | A913-GR.50 |
| BR31 | 1 | 550S162-43 | 1'-11 1/16" | 2.77 | A913-GR.50 |
| BT17 | 1 | 550S162-43 | 4'-4 1/4" | 6.28 | A913-GR.50 |
| S81 | 1 | 550S162-43 | 7'-10 7/16" | 11.35 | A913-GR.50 |
| S82 | 1 | 550S162-43 | 7'-10 7/16" | 11.35 | A913-GR.50 |
| S84 | 1 | 550S162-43 | 7'-10 7/16" | 11.35 | A913-GR.50 |
| TT3 | 1 | 550S162-43 | 4'-4 1/4" | 6.28 | A913-GR.50 |
| | | TOTAL WEIGHT THIS DRAWING | | 73 | |

| REV | DESCRIPTION | DATE |
|---|---|---|
| | | |

| | | | |
|---|---|---|---|
| DESCRIPTION | | | |
| PROJECT NAME | | | |
| DRAWN BY | VN | JOB No. | DRG No. |
| DATE DRAWN | 07/19/2024 | | L35 |

Tekla structures

# BILL OF MATERIAL

| MARK | QTY | DESCRIPTION | LENGTH | WEIGHT | REMARKS |
|---|---|---|---|---|---|
| L36 | 1 | LOAD BEARNING WALL | | | SQ-2 |
| S189 | 1 | 550S162-43 | 0'-7 1/4" | 0.87 | A913-GR.50 |
| BT170 | 1 | 550S162-43 | 0'-3 1/4" | 0.39 | A913-GR.50 |
| S189 | 1 | 550S162-43 | 0'-7 1/4" | 0.87 | A913-GR.50 |
| TT29 | 1 | 550S162-43 | 0'-3 1/4" | 0.39 | A913-GR.50 |
| | | TOTAL WEIGHT THIS DRAWING | | 3 | |

FRONT VIEW

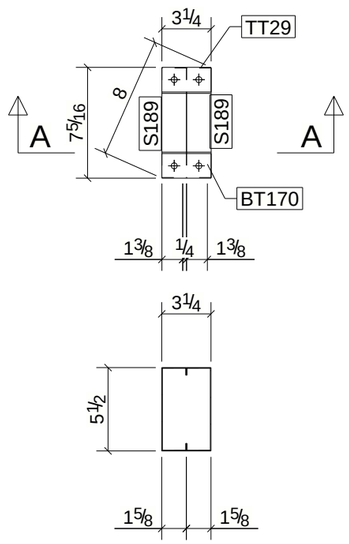


A - A

| REV | DESCRIPTION | DATE |
|---|---|---|
| | | |

| | | | |
|---|---|---|---|
| DESCRIPTION | | | |
| PROJECT NAME | | | |
| DRAWN BY | VN | JOB No. | DRG No. |
| DATE DRAWN | 07/10/2024 | | L36 |

Tekla structures

# BILL OF MATERIAL

| MARK | QTY | DESCRIPTION | LENGTH | WEIGHT | REMARKS |
|---|---|---|---|---|---|
| L37 | 1 | LOAD BEARNING WALL | | | SQ-2 |
| S115 | 1 | 550S162-43 | 7'-10 7/16" | 11.35 | A913-GR.50 |
| BR51 | 1 | 550S162-43 | 5'-2 1/4" | 7.48 | A913-GR.50 |
| BR52 | 1 | 550S162-43 | 3'-2 3/4" | 4.66 | A913-GR.50 |
| BR53 | 1 | 550S162-43 | 2'-0 13/16" | 2.98 | A913-GR.50 |
| BT18 | 1 | 550S162-43 | 3'-8 3/4" | 5.38 | A913-GR.50 |
| S83 | 1 | 550S162-43 | 7'-10 7/16" | 11.35 | A913-GR.50 |
| S84 | 1 | 550S162-43 | 7'-10 7/16" | 11.35 | A913-GR.50 |
| TT135 | 1 | 550S162-43 | 3'-8 3/4" | 5.38 | A913-GR.50 |
| | | TOTAL WEIGHT THIS DRAWING | | 60 | |

FRONT VIEW

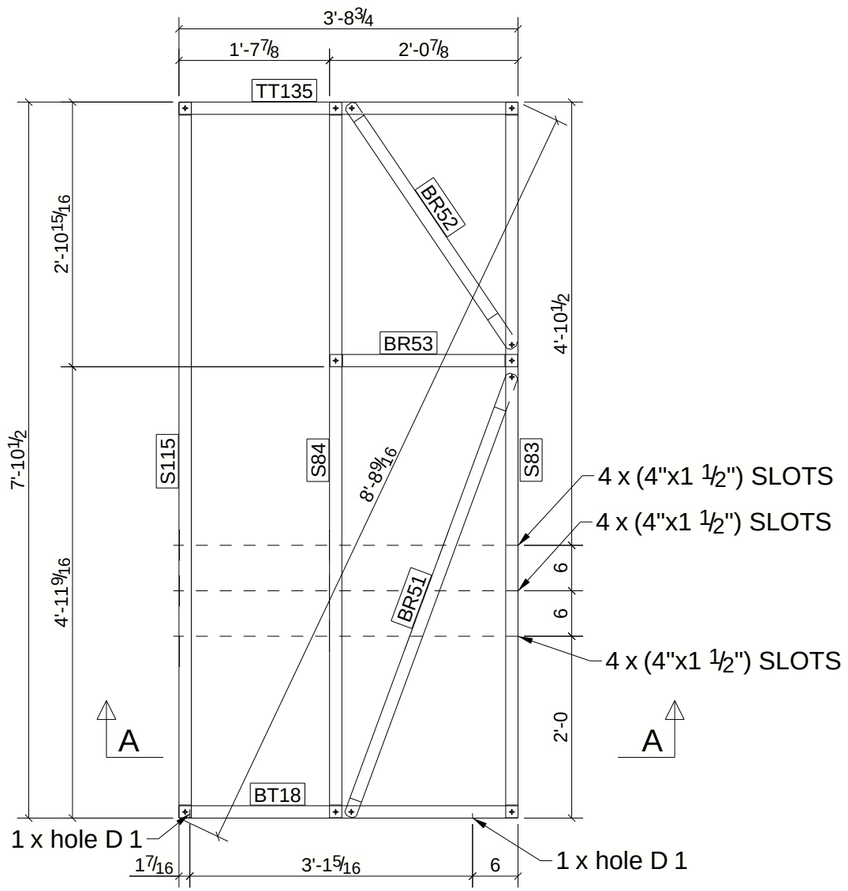


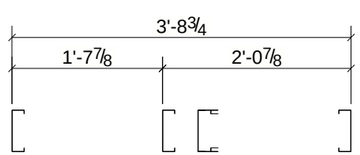


A - A

| REV | DESCRIPTION | DATE |
|---|---|---|
| | | |

| | | | |
|---|---|---|---|
| DESCRIPTION | | | |
| PROJECT NAME | | | |
| DRAWN BY | VN | JOB No. | DRG No. |
| DATE DRAWN | 07/19/2024 | | L37 |

Tekla structures

FRONT VIEW

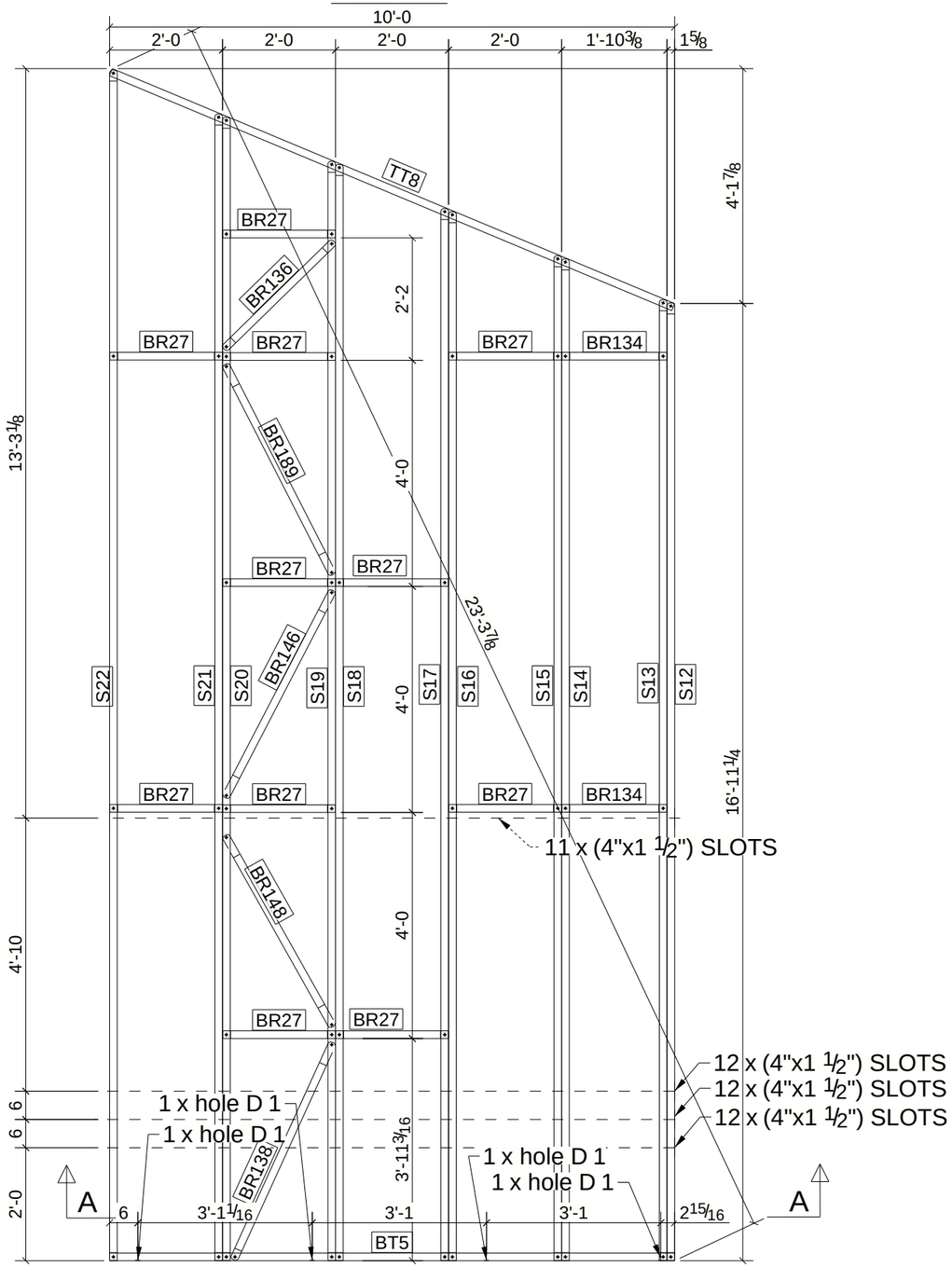


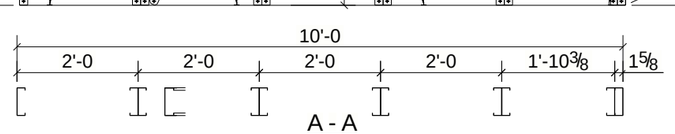


A - A

# BILL OF MATERIAL

| MARK | QTY | DESCRIPTION | LENGTH | WEIGHT | REMARKS |
|---|---|---|---|---|---|
| L38 | 1 | LOAD BEARNING WALL | | | SQ-2 |
| S12 | 1 | 550S162-43 | 16'-11 5/16" | 24.45 | A913-GR.50 |
| BR27 | 11 | 550S162-43 | 1'-11 15/16" | 31.63 | A913-GR.50 |
| BR134 | 2 | 550S162-43 | 1'-10 5/16" | 5.36 | A913-GR.50 |
| BR136 | 1 | 550S162-43 | 2'-8 5/8" | 3.92 | A913-GR.50 |
| BR138 | 1 | 550S162-43 | 4'-2 11/16" | 6.09 | A913-GR.50 |
| BR146 | 1 | 550S162-43 | 4'-1 1/2" | 5.96 | A913-GR.50 |
| BR148 | 1 | 550S162-43 | 3'-10 9/16" | 5.60 | A913-GR.50 |
| BR189 | 1 | 550S162-43 | 4'-2 1/8" | 6.03 | A913-GR.50 |
| BT5 | 1 | 550S162-43 | 10'-0" | 14.43 | A913-GR.50 |
| S13 | 1 | 550S162-43 | 17'-0" | 24.53 | A913-GR.50 |
| S14 | 1 | 550S162-43 | 17'-8 11/16" | 25.57 | A913-GR.50 |
| S15 | 1 | 550S162-43 | 17'-9 3/8" | 25.65 | A913-GR.50 |
| S16 | 1 | 550S162-43 | 18'-6 11/16" | 26.78 | A913-GR.50 |
| S17 | 1 | 550S162-43 | 18'-7 3/8" | 26.86 | A913-GR.50 |
| S18 | 1 | 550S162-43 | 19'-4 3/4" | 27.98 | A913-GR.50 |
| S19 | 1 | 550S162-43 | 19'-5 3/8" | 28.07 | A913-GR.50 |
| S20 | 1 | 550S162-43 | 20'-2 3/4" | 29.19 | A913-GR.50 |
| S21 | 1 | 550S162-43 | 20'-3 7/16" | 29.27 | A913-GR.50 |
| S22 | 1 | 550S162-43 | 21'-0 3/4" | 30.39 | A913-GR.50 |
| TT8 | 1 | 550S162-43 | 10'-9 3/8" | 15.56 | A913-GR.50 |
| | | TOTAL WEIGHT THIS DRAWING | | 393 | |

| REV | DESCRIPTION | DATE |
|---|---|---|
| | | |

| | | | |
|---|---|---|---|
| DESCRIPTION | | | |
| PROJECT NAME | | | |
| DRAWN BY | VN | JOB No. | DRG No. |
| DATE DRAWN | 07/19/2024 | | L38 |

Tekla structures

FRONT VIEW

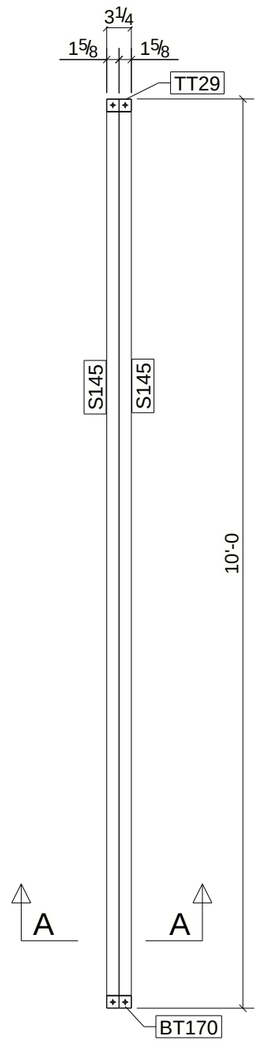


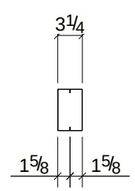


A - A

# BILL OF MATERIAL

| MARK | QTY | DESCRIPTION | LENGTH | WEIGHT | REMARKS |
|---|---|---|---|---|---|
| L39 | 1 | LOAD BEARNING WALL | | | SQ-2 |
| S145 | 1 | 550S162-43 | 9'-11 15/16" | 14.42 | A913-GR.50 |
| BT170 | 1 | 550S162-43 | 0'-3 1/4" | 0.39 | A913-GR.50 |
| S145 | 1 | 550S162-43 | 9'-11 15/16" | 14.42 | A913-GR.50 |
| TT29 | 1 | 550S162-43 | 0'-3 1/4" | 0.39 | A913-GR.50 |
| | | TOTAL WEIGHT THIS DRAWING | | 30 | |

| REV | DESCRIPTION | DATE |
|---|---|---|
| | | |

| | | | |
|---|---|---|---|
| DESCRIPTION | | | |
| PROJECT NAME | | | |
| DRAWN BY | VN | JOB No. | DRG No. |
| DATE DRAWN | 07/10/2024 | | L39 |

Tekla structures

FRONT VIEW

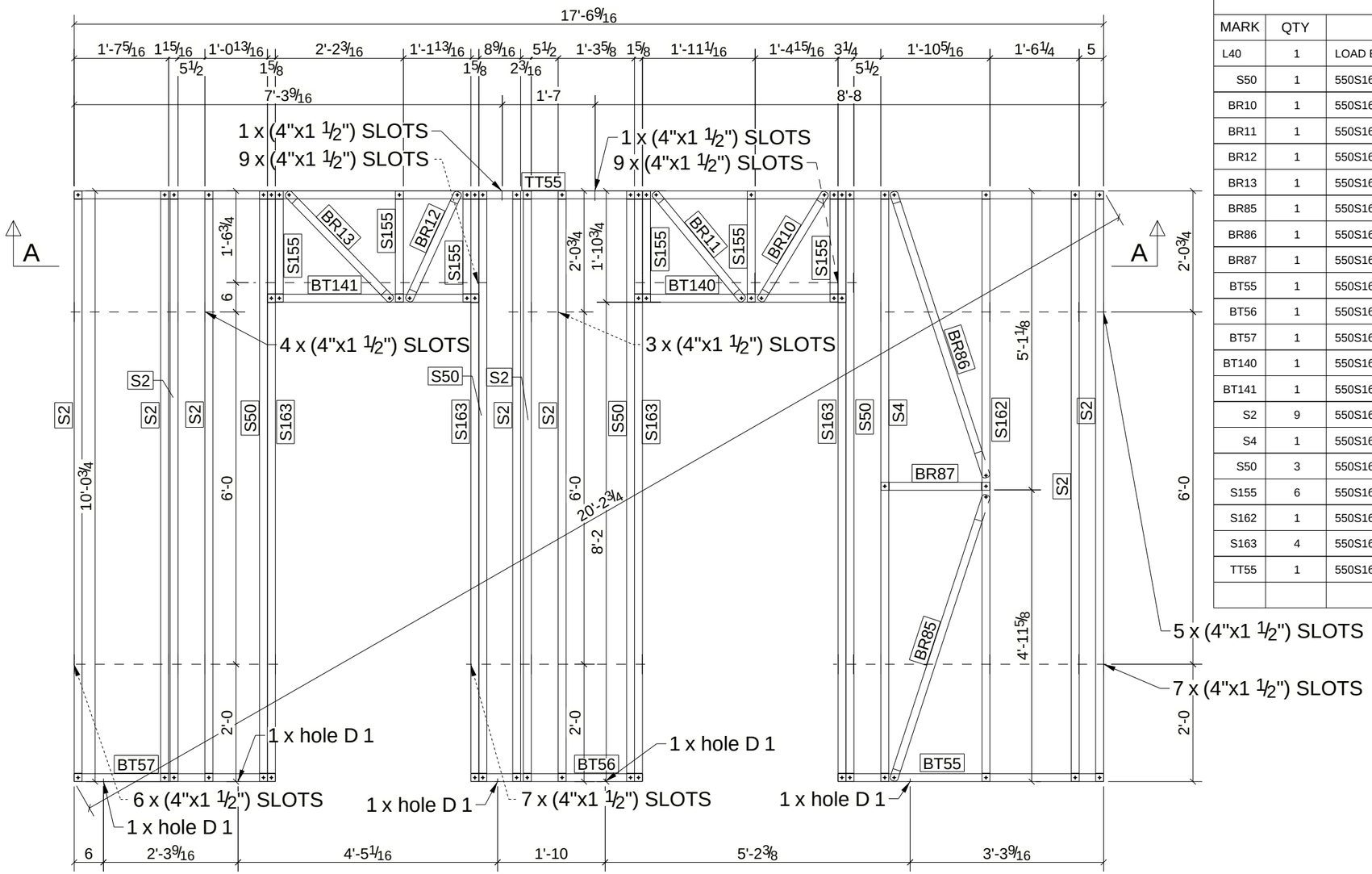


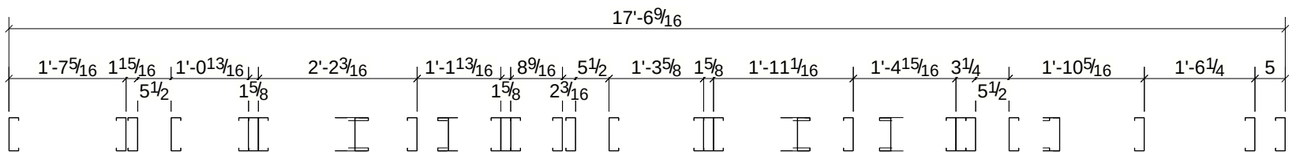


A - A

# BILL OF MATERIAL

| MARK | QTY | DESCRIPTION | LENGTH | WEIGHT | REMARKS |
|---|---|---|---|---|---|
| L40 | 1 | LOAD BEARNING WALL | | | SQ-2 |
| S50 | 1 | 550S162-43 | 10'-0 11/16" | 14.51 | A913-GR.50 |
| BR10 | 1 | 550S162-43 | 2'-2" | 3.13 | A913-GR.50 |
| BR11 | 1 | 550S162-43 | 2'-4 11/16" | 3.45 | A913-GR.50 |
| BR12 | 1 | 550S162-43 | 2'-0 9/16" | 2.96 | A913-GR.50 |
| BR13 | 1 | 550S162-43 | 2'-6 13/16" | 3.71 | A913-GR.50 |
| BR85 | 1 | 550S162-43 | 5'-1 7/16" | 7.39 | A913-GR.50 |
| BR86 | 1 | 550S162-43 | 5'-1 7/16" | 7.39 | A913-GR.50 |
| BR87 | 1 | 550S162-43 | 1'-10 1/4" | 2.67 | A913-GR.50 |
| BT55 | 1 | 550S162-43 | 4'-6 5/16" | 6.53 | A913-GR.50 |
| BT56 | 1 | 550S162-43 | 2'-11 1/16" | 4.22 | A913-GR.50 |
| BT57 | 1 | 550S162-43 | 3'-5 3/16" | 4.95 | A913-GR.50 |
| BT140 | 1 | 550S162-43 | 3'-7 1/4" | 5.20 | A913-GR.50 |
| BT141 | 1 | 550S162-43 | 3'-7 1/4" | 5.20 | A913-GR.50 |
| S2 | 9 | 550S162-43 | 10'-0 11/16" | 130.58 | A913-GR.50 |
| S4 | 1 | 550S162-43 | 10'-0 11/16" | 14.51 | A913-GR.50 |
| S50 | 3 | 550S162-43 | 10'-0 11/16" | 43.53 | A913-GR.50 |
| S155 | 6 | 550S162-43 | 1'-10 11/16" | 16.35 | A913-GR.50 |
| S162 | 1 | 550S162-43 | 10'-0 11/16" | 14.51 | A913-GR.50 |
| S163 | 4 | 550S162-43 | 10'-0 11/16" | 58.04 | A913-GR.50 |
| TT55 | 1 | 550S162-43 | 17'-6 9/16" | 25.32 | A913-GR.50 |
| | | TOTAL WEIGHT THIS DRAWING | | 374 | |

| REV | DESCRIPTION | DATE |
|---|---|---|
| | | |

| | | | |
|---|---|---|---|
| DESCRIPTION | | | |
| PROJECT NAME | | | |
| DRAWN BY | VN | JOB No. | DRG No. |
| DATE DRAWN | 07/19/2024 | | L40 |

Tekla structures

FRONT VIEW

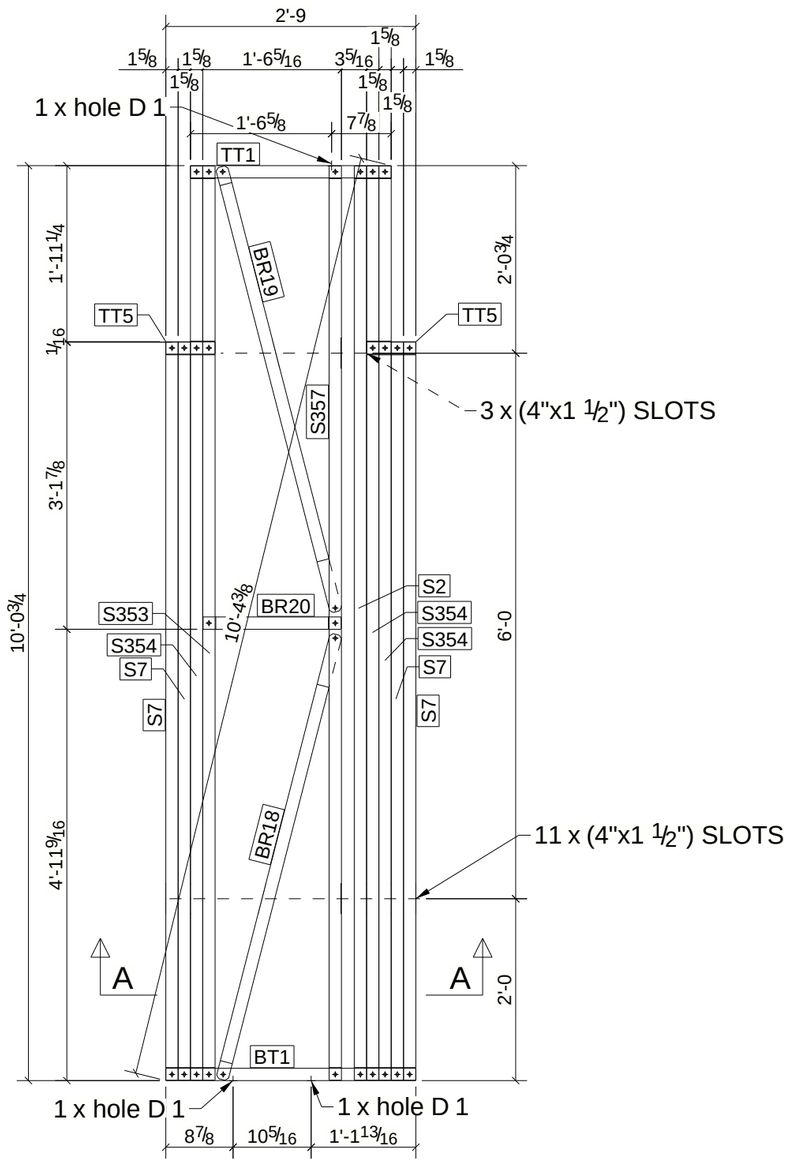


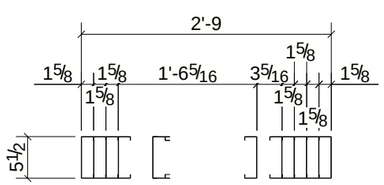


A - A

# BILL OF MATERIAL

| MARK | QTY | DESCRIPTION | LENGTH | WEIGHT | REMARKS |
|---|---|---|---|---|---|
| L41 | 1 | LOAD BEARNING WALL | | | SQ-2 |
| S2 | 1 | 550S162-43 | 10'-0 11/16" | 14.51 | A913-GR.50 |
| BR18 | 1 | 550S162-43 | 5'-0 5/8" | 7.29 | A913-GR.50 |
| BR19 | 1 | 550S162-43 | 5'-0 5/8" | 7.29 | A913-GR.50 |
| BR20 | 1 | 550S162-43 | 1'-6 3/16" | 2.19 | A913-GR.50 |
| BT1 | 1 | 550S162-43 | 2'-9" | 3.97 | A913-GR.50 |
| S7 | 4 | 550S162-43 | 8'-1 7/16" | 46.85 | A913-GR.50 |
| S353 | 1 | 550S162-43 | 10'-0 11/16" | 14.51 | A913-GR.50 |
| S354 | 3 | 550S162-43 | 10'-0 11/16" | 43.53 | A913-GR.50 |
| S357 | 1 | 550S162-43 | 10'-0 11/16" | 14.51 | A913-GR.50 |
| TT1 | 1 | 550S162-43 | 2'-2 1/2" | 3.19 | A913-GR.50 |
| TT5 | 2 | 550S162-43 | 0'-6 1/2" | 1.56 | A913-GR.50 |
| | | TOTAL WEIGHT THIS DRAWING | | 159 | |

| REV | DESCRIPTION | DATE |
|---|---|---|
| | | |

| | | | |
|---|---|---|---|
| DESCRIPTION | | | |
| PROJECT NAME | | | |
| DRAWN BY | VN | JOB No. | DRG No. |
| DATE DRAWN | 07/19/2024 | | L41 |

Tekla structures

# BILL OF MATERIAL

| MARK | QTY | DESCRIPTION | LENGTH | WEIGHT | REMARKS |
|---|---|---|---|---|---|
| L42 | 1 | LOAD BEARNING WALL | | | SQ-2 |
| S11 | 1 | 550S162-43 | 9'-11 15/16" | 14.42 | A913-GR.50 |
| BT4 | 1 | 550S162-43 | 0'-7 3/8" | 0.89 | A913-GR.50 |
| S11 | 3 | 550S162-43 | 9'-11 15/16" | 43.26 | A913-GR.50 |
| TT7 | 1 | 550S162-43 | 0'-7 3/8" | 0.89 | A913-GR.50 |
| | | TOTAL WEIGHT THIS DRAWING | | 59 | |

FRONT VIEW

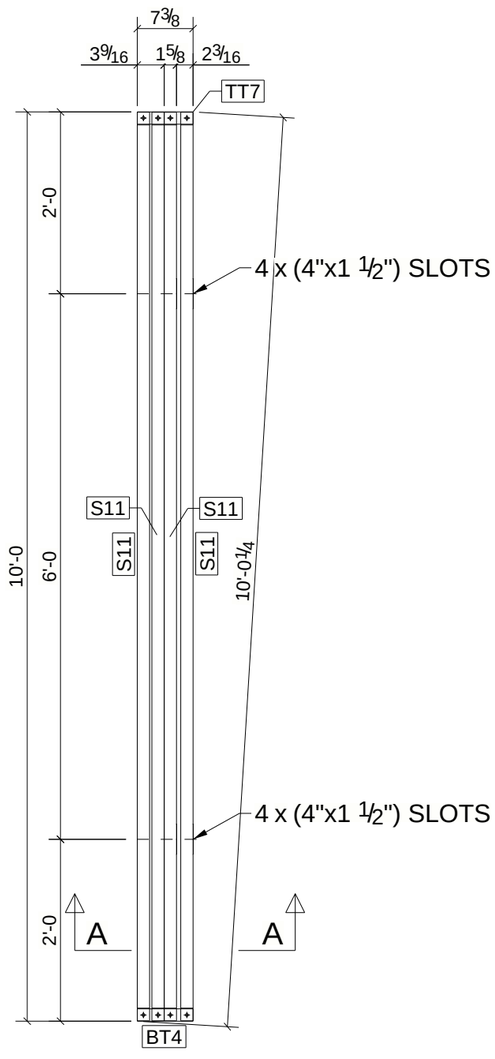


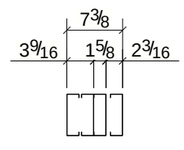


A - A

| REV | DESCRIPTION | DATE |
|---|---|---|
| | | |

| | | | |
|---|---|---|---|
| DESCRIPTION | | | |
| PROJECT NAME | | | |
| DRAWN BY | VN | JOB No. | DRG No. |
| DATE DRAWN | 07/10/2024 | | L42 |

Tekla structures

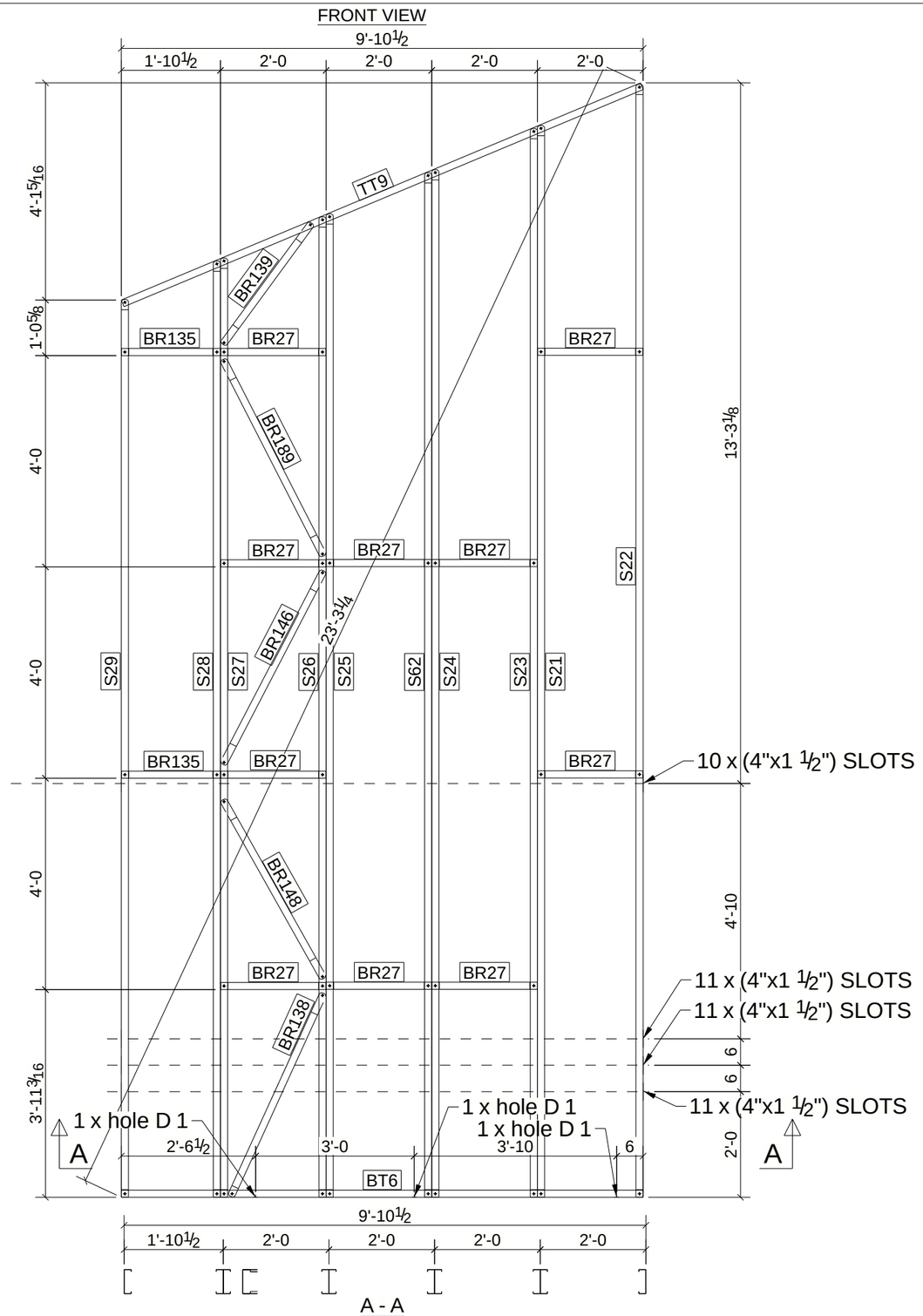


# BILL OF MATERIAL

| MARK | QTY | DESCRIPTION | LENGTH | WEIGHT | REMARKS |
|---|---|---|---|---|---|
| L43 | 1 | LOAD BEARNING WALL | | | SQ-2 |
| S22 | 1 | 550S162-43 | 21'-0 3/4" | 30.39 | A913-GR.50 |
| BR27 | 10 | 550S162-43 | 1'-11 15/16" | 28.76 | A913-GR.50 |
| BR135 | 2 | 550S162-43 | 1'-10 7/16" | 5.40 | A913-GR.50 |
| BR138 | 1 | 550S162-43 | 4'-2 11/16" | 6.09 | A913-GR.50 |
| BR139 | 1 | 550S162-43 | 2'-10 1/8" | 4.10 | A913-GR.50 |
| BR146 | 1 | 550S162-43 | 4'-1 1/2" | 5.96 | A913-GR.50 |
| BR148 | 1 | 550S162-43 | 3'-10 9/16" | 5.60 | A913-GR.50 |
| BR189 | 1 | 550S162-43 | 4'-2 1/8" | 6.03 | A913-GR.50 |
| BT6 | 1 | 550S162-43 | 9'-10 1/2" | 14.25 | A913-GR.50 |
| S21 | 1 | 550S162-43 | 20'-3 7/16" | 29.27 | A913-GR.50 |
| S23 | 1 | 550S162-43 | 20'-2 3/4" | 29.19 | A913-GR.50 |
| S24 | 1 | 550S162-43 | 19'-5 3/8" | 28.06 | A913-GR.50 |
| S25 | 1 | 550S162-43 | 18'-7 5/16" | 26.86 | A913-GR.50 |
| S26 | 1 | 550S162-43 | 18'-6 11/16" | 26.77 | A913-GR.50 |
| S27 | 1 | 550S162-43 | 17'-9 5/16" | 25.65 | A913-GR.50 |
| S28 | 1 | 550S162-43 | 17'-8 5/8" | 25.57 | A913-GR.50 |
| S29 | 1 | 550S162-43 | 16'-11 7/8" | 24.52 | A913-GR.50 |
| S62 | 1 | 550S162-43 | 19'-4 11/16" | 27.98 | A913-GR.50 |
| TT9 | 1 | 550S162-43 | 10'-7 13/16" | 15.37 | A913-GR.50 |
| | | TOTAL WEIGHT THIS DRAWING | | 366 | |

| REV | DESCRIPTION | DATE |
|---|---|---|
| | | |

| | | | |
|---|---|---|---|
| DESCRIPTION | | | |
| PROJECT NAME | | | |
| DRAWN BY | VN | JOB No. | DRG No. |
| DATE DRAWN | 07/19/2024 | | L43 |

Tekla structures

FRONT VIEW

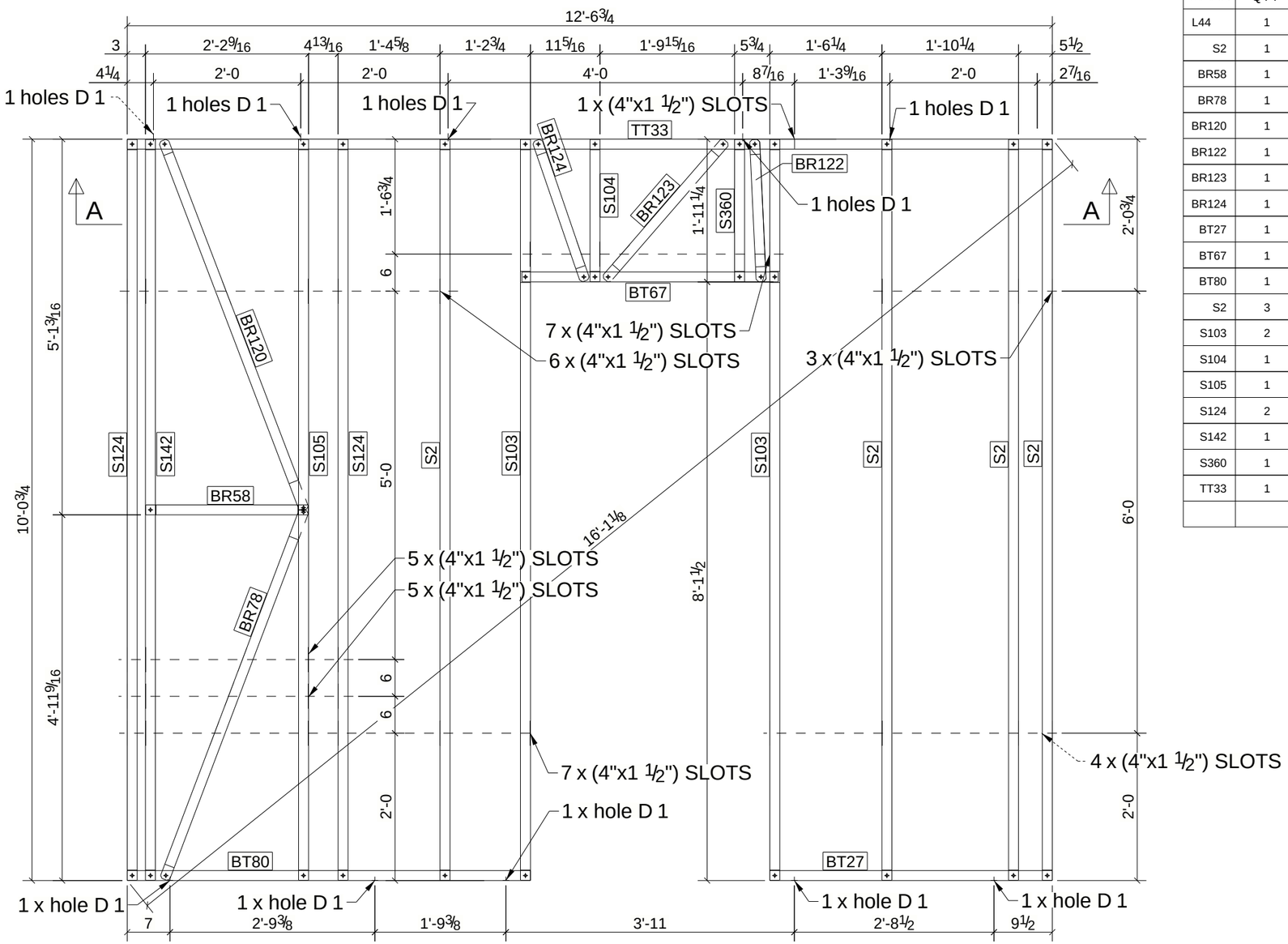


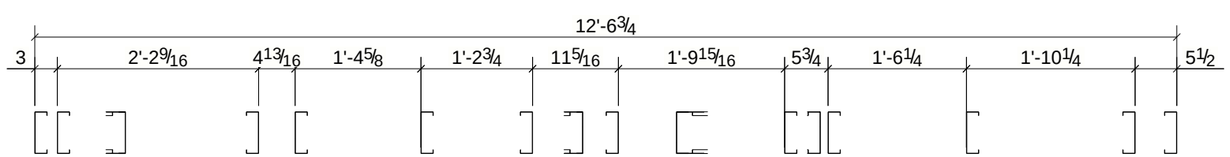


A - A

# BILL OF MATERIAL

| MARK | QTY | DESCRIPTION | LENGTH | WEIGHT | REMARKS |
|---|---|---|---|---|---|
| L44 | 1 | LOAD BEARNING WALL | | | SQ-2 |
| S2 | 1 | 550S162-43 | 10'-0 11/16" | 14.51 | A913-GR.50 |
| BR58 | 1 | 550S162-43 | 2'-2 1/2" | 3.18 | A913-GR.50 |
| BR78 | 1 | 550S162-43 | 5'-4 3/8" | 7.74 | A913-GR.50 |
| BR120 | 1 | 550S162-43 | 5'-4 7/16" | 7.75 | A913-GR.50 |
| BR122 | 1 | 550S162-43 | 1'-11 1/8" | 2.78 | A913-GR.50 |
| BR123 | 1 | 550S162-43 | 2'-5 15/16" | 3.60 | A913-GR.50 |
| BR124 | 1 | 550S162-43 | 2'-0 3/16" | 2.91 | A913-GR.50 |
| BT27 | 1 | 550S162-43 | 3'-10" | 5.53 | A913-GR.50 |
| BT67 | 1 | 550S162-43 | 3'-5 3/4" | 5.02 | A913-GR.50 |
| BT80 | 1 | 550S162-43 | 5'-5 11/16" | 7.90 | A913-GR.50 |
| S2 | 3 | 550S162-43 | 10'-0 11/16" | 43.53 | A913-GR.50 |
| S103 | 2 | 550S162-43 | 10'-0 11/16" | 29.02 | A913-GR.50 |
| S104 | 1 | 550S162-43 | 1'-11 3/16" | 2.79 | A913-GR.50 |
| S105 | 1 | 550S162-43 | 10'-0 11/16" | 14.51 | A913-GR.50 |
| S124 | 2 | 550S162-43 | 10'-0 11/16" | 29.02 | A913-GR.50 |
| S142 | 1 | 550S162-43 | 10'-0 11/16" | 14.51 | A913-GR.50 |
| S360 | 1 | 550S162-43 | 1'-11 3/16" | 2.79 | A913-GR.50 |
| TT33 | 1 | 550S162-43 | 12'-6 3/4" | 18.12 | A913-GR.50 |
| | | TOTAL WEIGHT THIS DRAWING | | 215 | |

| REV | DESCRIPTION | DATE |
|---|---|---|
| | | |

| | | | |
|---|---|---|---|
| DESCRIPTION | | | |
| PROJECT NAME | | | |
| DRAWN BY | VN | JOB No. | DRG No. |
| DATE DRAWN | 08/14/2024 | | L44 |

Tekla structures

FRONT VIEW

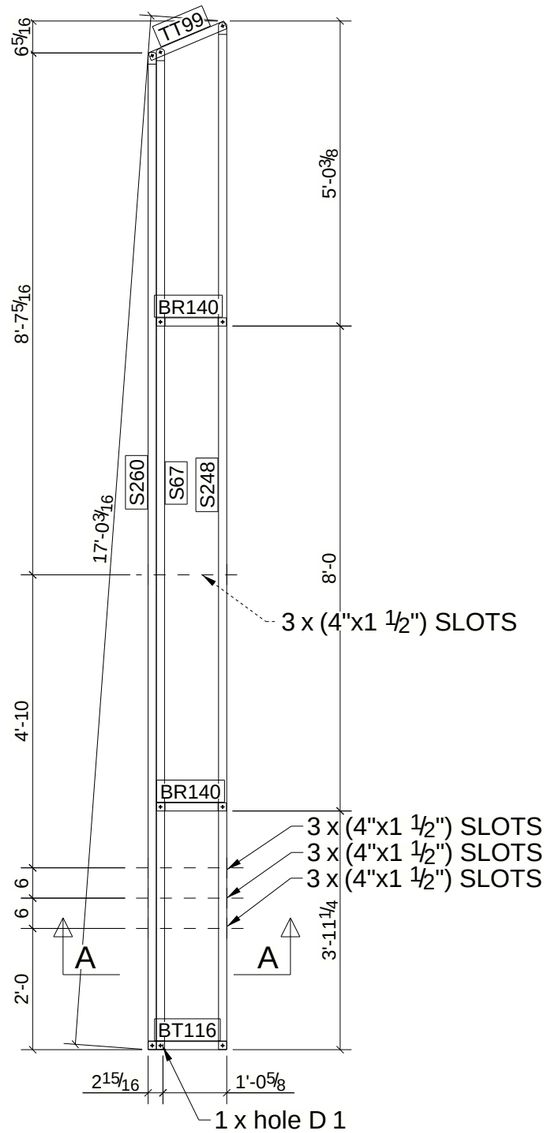


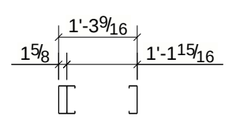


A - A

# BILL OF MATERIAL

| MARK | QTY | DESCRIPTION | LENGTH | WEIGHT | REMARKS |
|---|---|---|---|---|---|
| L45 | 1 | LOAD BEARNING WALL | | | SQ-2 |
| S260 | 1 | 550S162-43 | 16'-5 3/8" | 23.74 | A913-GR.50 |
| BR140 | 2 | 550S162-43 | 1'-1 7/8" | 3.33 | A913-GR.50 |
| BT116 | 1 | 550S162-43 | 1'-3 9/16" | 1.87 | A913-GR.50 |
| S67 | 1 | 550S162-43 | 16'-6 1/16" | 23.82 | A913-GR.50 |
| S248 | 1 | 550S162-43 | 16'-11 1/4" | 24.44 | A913-GR.50 |
| TT99 | 1 | 550S162-43 | 1'-4 1/4" | 1.95 | A913-GR.50 |
| | | TOTAL WEIGHT THIS DRAWING | | 79 | |

| REV | DESCRIPTION | DATE |
|---|---|---|
| | | |

| | | | |
|---|---|---|---|
| DESCRIPTION | | | |
| PROJECT NAME | | | |
| DRAWN BY | VN | JOB No. | DRG No. |
| DATE DRAWN | 07/19/2024 | | L45 |

Tekla structures

FRONT VIEW

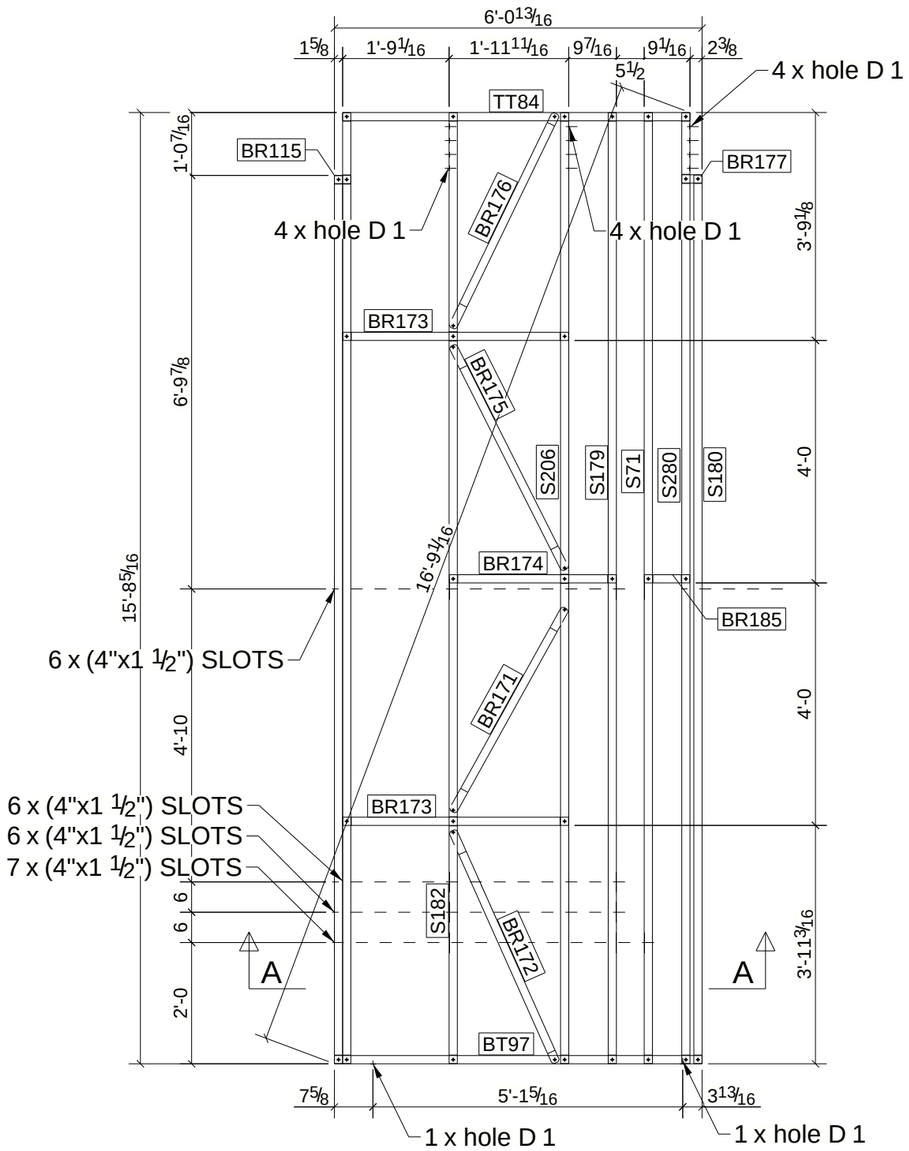


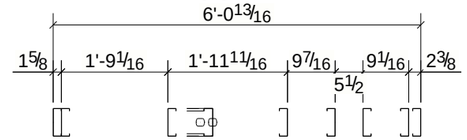


A - A

# BILL OF MATERIAL

| MARK | QTY | DESCRIPTION | LENGTH | WEIGHT | REMARKS |
|---|---|---|---|---|---|
| L46 | 1 | LOAD BEARNING WALL | | | SQ-2 |
| S180 | 1 | 550S162-43 | 14'-7 7/8" | 21.15 | A913-GR.50 |
| BR115 | 1 | 550S162-43 | 0'-3 1/4" | 0.39 | A913-GR.50 |
| BR171 | 1 | 550S162-43 | 3'-10 1/8" | 5.54 | A913-GR.50 |
| BR172 | 1 | 550S162-43 | 4'-2 5/16" | 6.05 | A913-GR.50 |
| BR173 | 2 | 550S162-43 | 3'-8 11/16" | 10.75 | A913-GR.50 |
| BR174 | 1 | 550S162-43 | 2'-9 1/16" | 3.97 | A913-GR.50 |
| BR175 | 1 | 550S162-43 | 4'-1 11/16" | 5.98 | A913-GR.50 |
| BR176 | 1 | 550S162-43 | 3'-11 3/16" | 5.67 | A913-GR.50 |
| BR177 | 1 | 550S162-43 | 0'-4" | 0.48 | A913-GR.50 |
| BR185 | 1 | 550S162-43 | 0'-9" | 1.08 | A913-GR.50 |
| BT97 | 1 | 550S162-43 | 6'-0 13/16" | 8.75 | A913-GR.50 |
| S54 | 1 | 550S162-43 | 14'-7 3/4" | 21.14 | A913-GR.50 |
| S71 | 1 | 550S162-43 | 15'-8 1/4" | 22.63 | A913-GR.50 |
| S179 | 1 | 550S162-43 | 15'-8 1/4" | 22.63 | A913-GR.50 |
| S182 | 1 | 550S162-43 | 15'-8 1/4" | 22.63 | A913-GR.50 |
| S186 | 1 | 550S162-43 | 15'-8 1/4" | 22.63 | A913-GR.50 |
| S206 | 1 | 550S162-43 | 15'-8 1/4" | 22.63 | A913-GR.50 |
| S280 | 1 | 550S162-43 | 15'-8 1/4" | 22.63 | A913-GR.50 |
| TT84 | 1 | 550S162-43 | 5'-8 3/4" | 8.27 | A913-GR.50 |
| | | TOTAL WEIGHT THIS DRAWING | | 235 | |

| REV | DESCRIPTION | DATE |
|---|---|---|
| | | |

| | | | |
|---|---|---|---|
| DESCRIPTION | | | |
| PROJECT NAME | | | |
| DRAWN BY | | JOB No. | DRG No. |
| DATE DRAWN | 07/19/2024 | | L46 |

Tekla structures

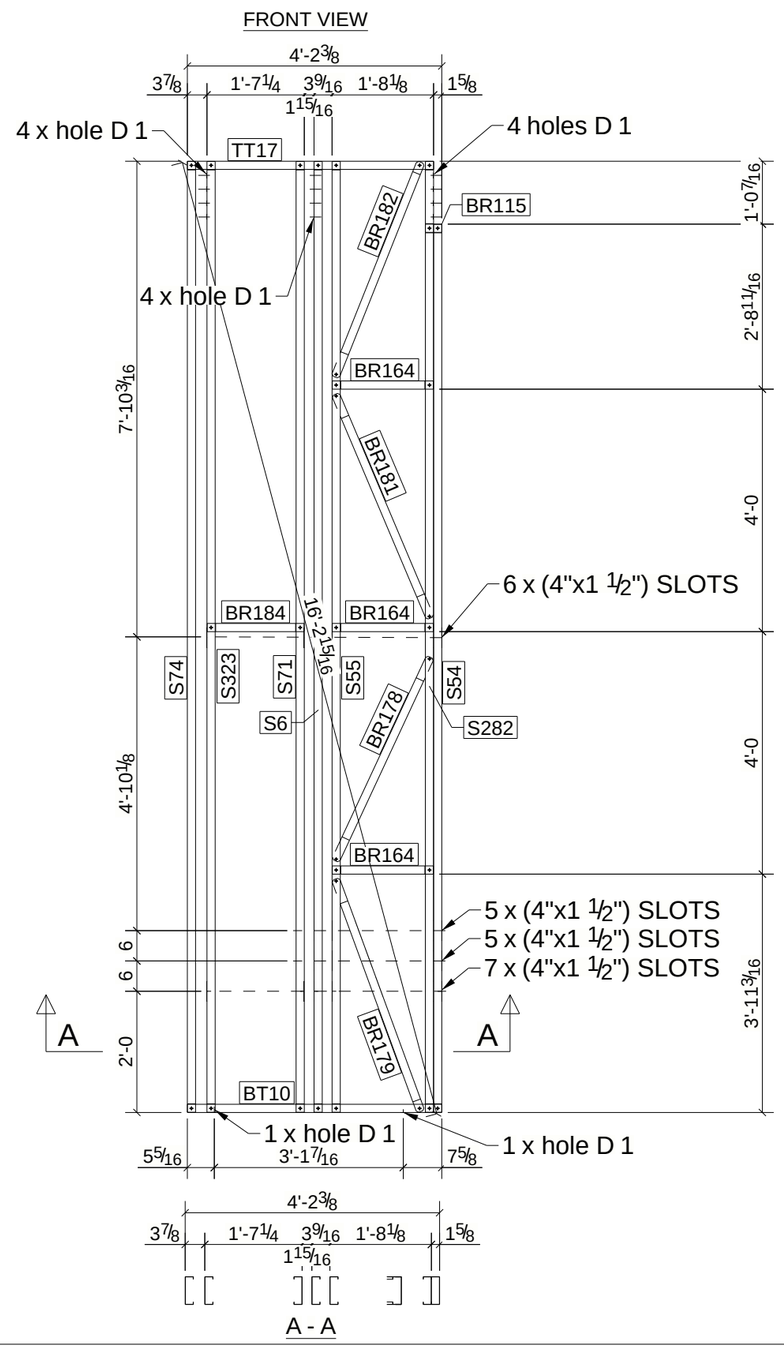


# BILL OF MATERIAL

| MARK | QTY | DESCRIPTION | LENGTH | WEIGHT | REMARKS |
|---|---|---|---|---|---|
| L47 | 1 | LOAD BEARNING WALL | | | SQ-2 |
| S74 | 1 | 550S162-43 | 15'-8 1/4" | 22.63 | A913-GR.50 |
| BR115 | 1 | 550S162-43 | 0'-3 1/4" | 0.39 | A913-GR.50 |
| BR164 | 3 | 550S162-43 | 1'-8" | 7.22 | A913-GR.50 |
| BR178 | 1 | 550S162-43 | 3'-8 7/16" | 5.35 | A913-GR.50 |
| BR179 | 1 | 550S162-43 | 4'-1" | 5.89 | A913-GR.50 |
| BR181 | 1 | 550S162-43 | 4'-0 1/8" | 5.79 | A913-GR.50 |
| BR182 | 1 | 550S162-43 | 3'-9 13/16" | 5.51 | A913-GR.50 |
| BR184 | 1 | 550S162-43 | 1'-7 3/16" | 2.31 | A913-GR.50 |
| BT10 | 1 | 550S162-43 | 4'-2 3/8" | 6.06 | A913-GR.50 |
| S6 | 1 | 550S162-43 | 15'-8 1/4" | 22.63 | A913-GR.50 |
| S54 | 1 | 550S162-43 | 14'-7 3/4" | 21.14 | A913-GR.50 |
| S55 | 1 | 550S162-43 | 15'-8 1/4" | 22.63 | A913-GR.50 |
| S71 | 1 | 550S162-43 | 15'-8 1/4" | 22.63 | A913-GR.50 |
| S282 | 1 | 550S162-43 | 15'-8 1/4" | 22.63 | A913-GR.50 |
| S323 | 1 | 550S162-43 | 15'-8 1/4" | 22.63 | A913-GR.50 |
| TT17 | 1 | 550S162-43 | 4'-0 3/4" | 5.86 | A913-GR.50 |
| | | TOTAL WEIGHT THIS DRAWING | | 201 | |

| REV | DESCRIPTION | DATE |
|---|---|---|
| | | |

| | | | |
|---|---|---|---|
| DESCRIPTION | | | |
| PROJECT NAME | | | |
| DRAWN BY | VN | JOB No. | DRG No. |
| DATE DRAWN | 07/19/2024 | | L47 |

Tekla structures

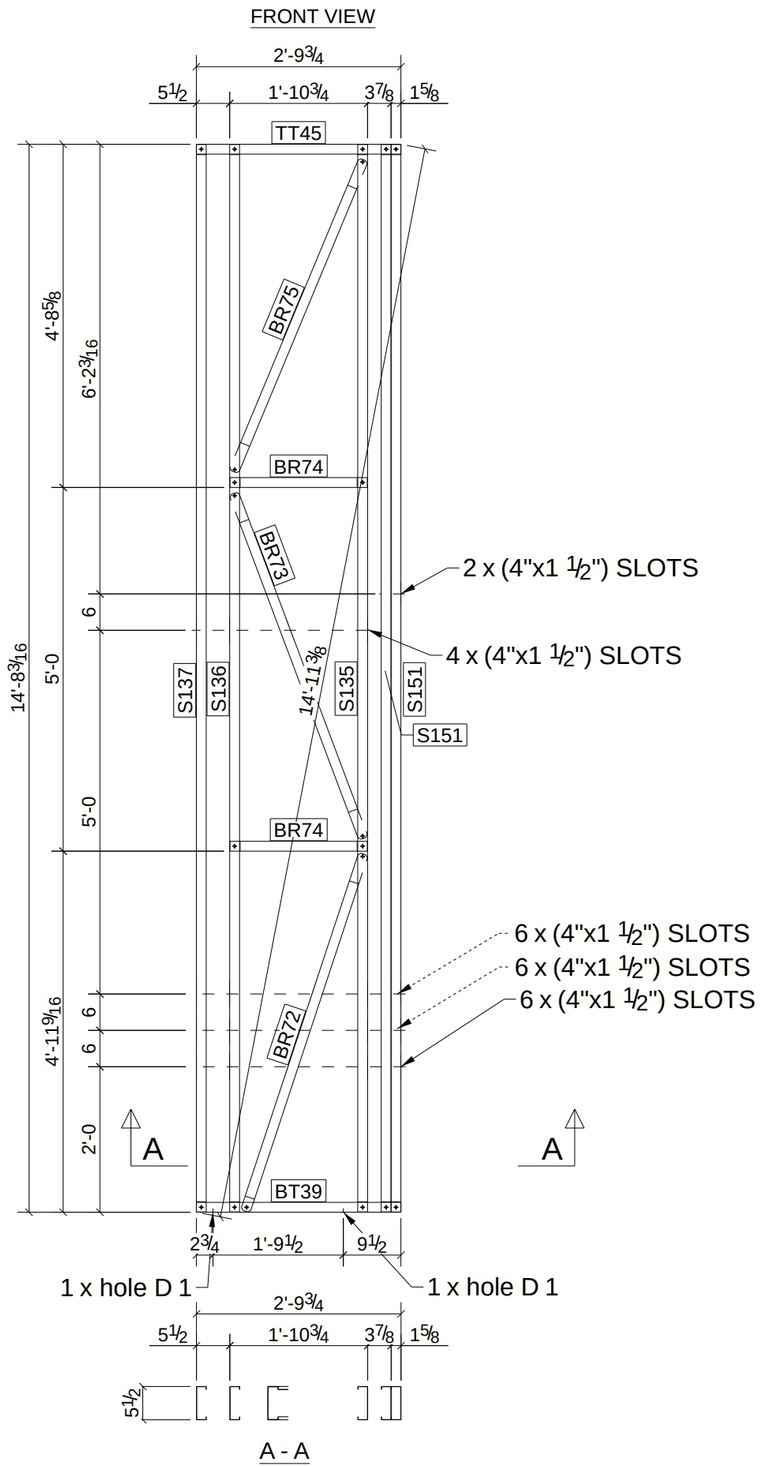


# BILL OF MATERIAL

| MARK | QTY | DESCRIPTION | LENGTH | WEIGHT | REMARKS |
|---|---|---|---|---|---|
| L48 | 1 | LOAD BEARNING WALL | | | SQ-2 |
| S151 | 1 | 550S162-43 | 14'-8 1/16" | 21.17 | A913-GR.50 |
| BR72 | 1 | 550S162-43 | 5'-2 1/16" | 7.46 | A913-GR.50 |
| BR73 | 1 | 550S162-43 | 5'-0 13/16" | 7.31 | A913-GR.50 |
| BR74 | 2 | 550S162-43 | 1'-10 11/16" | 5.45 | A913-GR.50 |
| BR75 | 1 | 550S162-43 | 4'-7 3/4" | 6.70 | A913-GR.50 |
| BT39 | 1 | 550S162-43 | 2'-9 3/4" | 4.06 | A913-GR.50 |
| S135 | 1 | 550S162-43 | 14'-8 1/16" | 21.17 | A913-GR.50 |
| S136 | 1 | 550S162-43 | 14'-8 1/16" | 21.17 | A913-GR.50 |
| S137 | 1 | 550S162-43 | 14'-8 1/16" | 21.17 | A913-GR.50 |
| S151 | 1 | 550S162-43 | 14'-8 1/16" | 21.17 | A913-GR.50 |
| TT45 | 1 | 550S162-43 | 2'-9 3/4" | 4.06 | A913-GR.50 |
| | | TOTAL WEIGHT THIS DRAWING | | 141 | |

| REV | DESCRIPTION | DATE |
|---|---|---|
| | | |

| | | | |
|---|---|---|---|
| DESCRIPTION | | | |
| PROJECT NAME | | | |
| DRAWN BY | VN | JOB No. | DRG No. |
| DATE DRAWN | 07/19/2024 | | L48 |

Tekla structures

FRONT VIEW

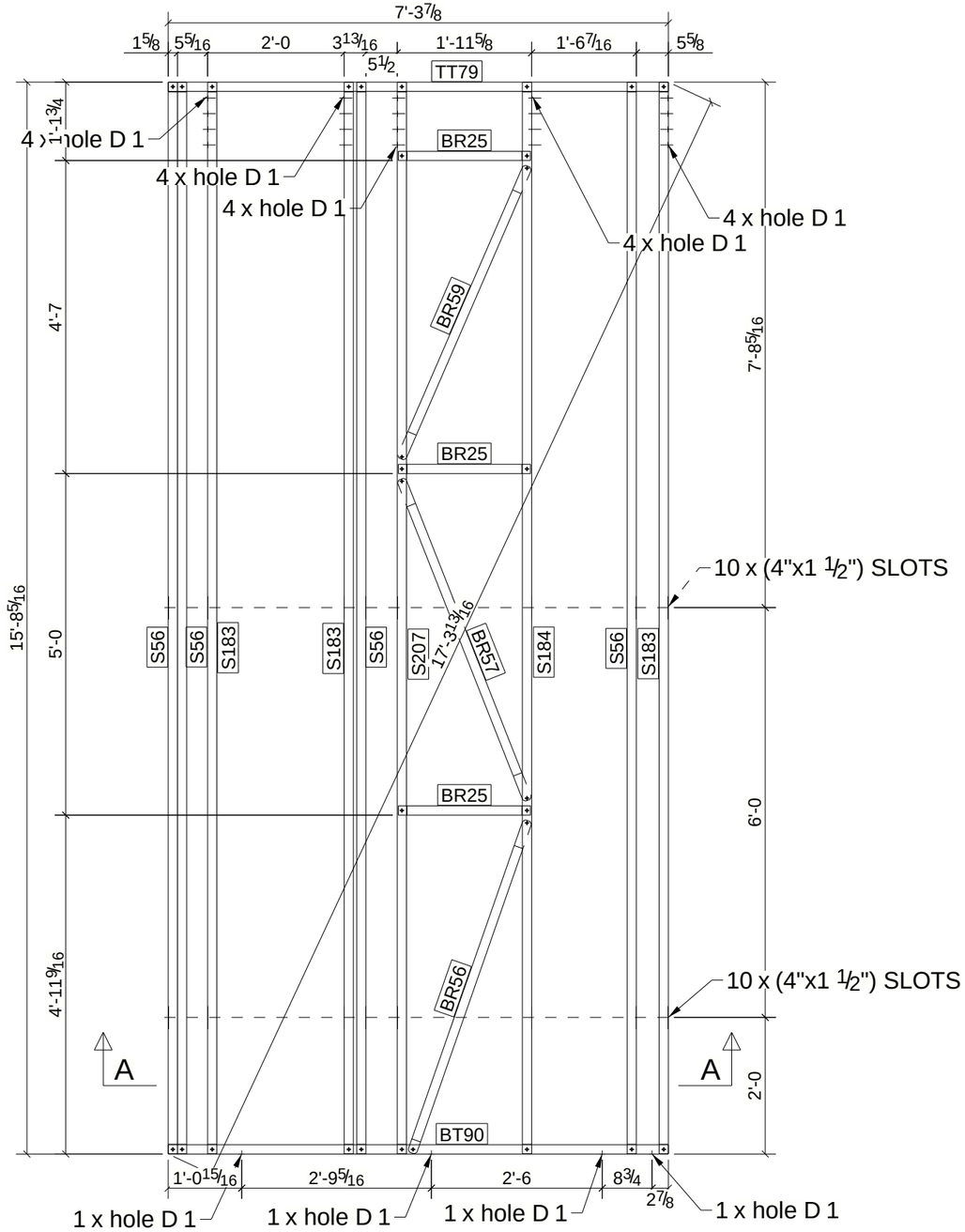


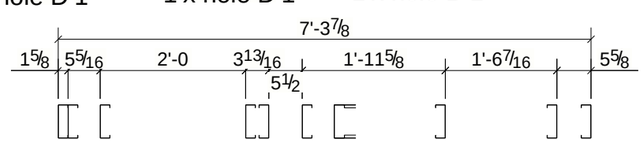


A - A

# BILL OF MATERIAL

| MARK | QTY | DESCRIPTION | LENGTH | WEIGHT | REMARKS |
|---|---|---|---|---|---|
| L49 | 1 | LOAD BEARNING WALL | | | SQ-2 |
| S56 | 1 | 550S162-43 | 15'-8 1/4" | 22.63 | A913-GR.50 |
| BR25 | 3 | 550S162-43 | 1'-11 1/4" | 8.38 | A913-GR.50 |
| BR56 | 1 | 550S162-43 | 5'-1 13/16" | 7.44 | A913-GR.50 |
| BR57 | 1 | 550S162-43 | 5'-0 5/8" | 7.29 | A913-GR.50 |
| BR59 | 1 | 550S162-43 | 4'-8" | 6.74 | A913-GR.50 |
| BT90 | 1 | 550S162-43 | 7'-3 7/8" | 10.57 | A913-GR.50 |
| S56 | 3 | 550S162-43 | 15'-8 1/4" | 67.90 | A913-GR.50 |
| S183 | 3 | 550S162-43 | 15'-8 1/4" | 67.90 | A913-GR.50 |
| S184 | 1 | 550S162-43 | 15'-8 1/4" | 22.63 | A913-GR.50 |
| S207 | 1 | 550S162-43 | 15'-8 1/4" | 22.63 | A913-GR.50 |
| TT79 | 1 | 550S162-43 | 7'-3 7/8" | 10.57 | A913-GR.50 |
| | | TOTAL WEIGHT THIS DRAWING | | 255 | |

| REV | DESCRIPTION | DATE |
|---|---|---|
| | | |

| | | | |
|---|---|---|---|
| DESCRIPTION | | | |
| PROJECT NAME | | | |
| DRAWN BY | VN | JOB No. | DRG No. |
| DATE DRAWN | 07/19/2024 | | L49 |

Tekla structures

FRONT VIEW

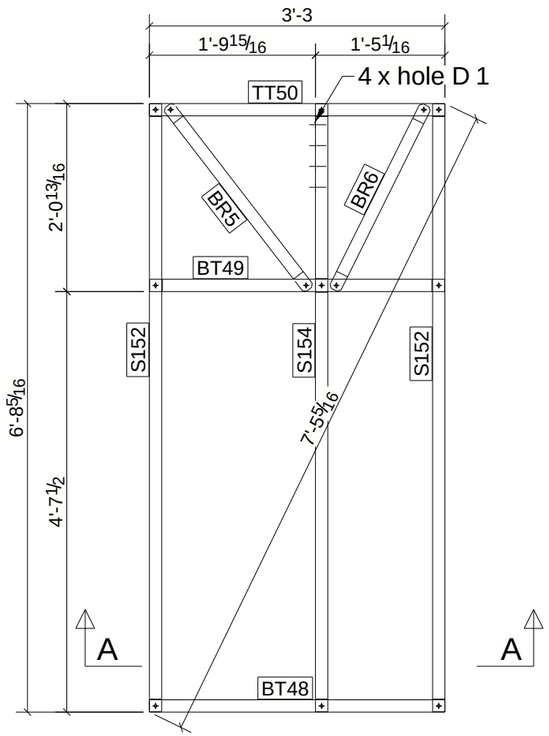


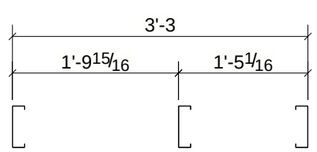


A - A

# BILL OF MATERIAL

| MARK | QTY | DESCRIPTION | LENGTH | WEIGHT | REMARKS |
|---|---|---|---|---|---|
| L50 | 1 | LOAD BEARNING WALL | | | SQ-2 |
| S154 | 1 | 550S162-43 | 6'-8 1/4" | 9.65 | A913-GR.50 |
| BR5 | 1 | 550S162-43 | 2'-6 9/16" | 3.68 | A913-GR.50 |
| BR6 | 1 | 550S162-43 | 2'-3 3/16" | 3.27 | A913-GR.50 |
| BT48 | 1 | 550S162-43 | 3'-3" | 4.69 | A913-GR.50 |
| BT49 | 1 | 550S162-43 | 3'-2 15/16" | 4.68 | A913-GR.50 |
| S152 | 2 | 550S162-43 | 6'-8 1/4" | 19.29 | A913-GR.50 |
| TT50 | 1 | 550S162-43 | 3'-3" | 4.69 | A913-GR.50 |
| | | TOTAL WEIGHT THIS DRAWING | | 50 | |

| REV | DESCRIPTION | DATE |
|---|---|---|
| | | |

| | | | |
|---|---|---|---|
| DESCRIPTION | | | |
| PROJECT NAME | | | |
| DRAWN BY | VN | JOB No. | DRG No. |
| DATE DRAWN | 07/19/2024 | | L50 |

Tekla structures

FRONT VIEW

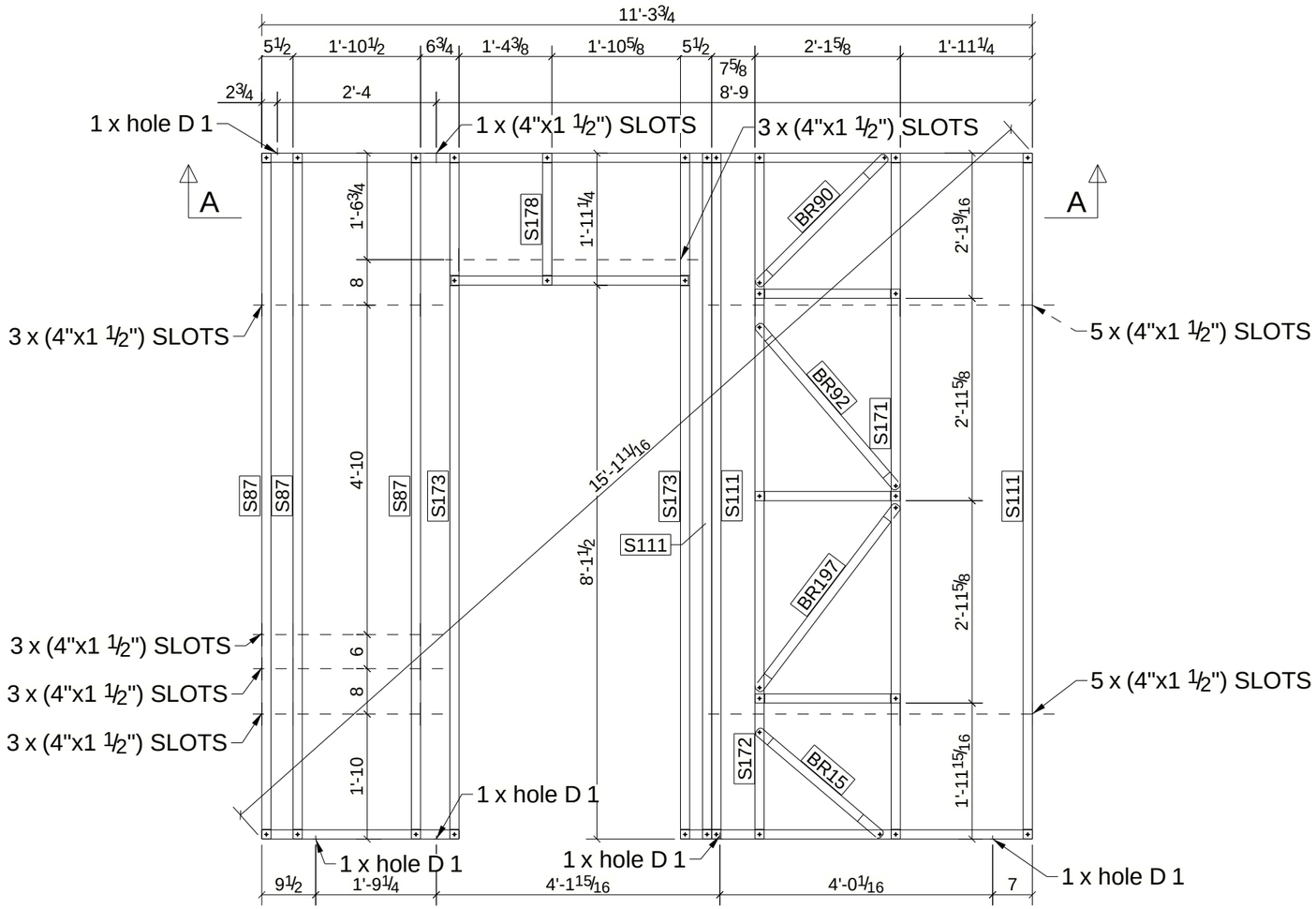


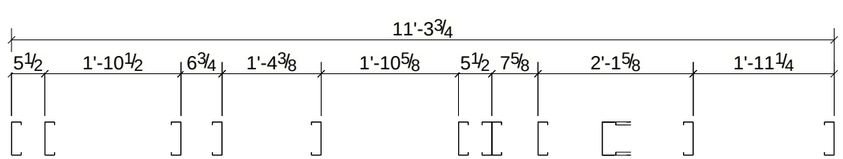


A - A

# BILL OF MATERIAL

| MARK | QTY | DESCRIPTION | LENGTH | WEIGHT | REMARKS |
|---|---|---|---|---|---|
| L51 | 1 | LOAD BEARNING WALL | | | SQ-2 |
| S111 | 1 | 550S162-43 | 10'-0 11/16" | 14.51 | A913-GR.50 |
| BR15 | 1 | 550S162-43 | 2'-4 13/16" | 3.46 | A913-GR.50 |
| BR90 | 1 | 550S162-43 | 2'-8 1/8" | 3.86 | A913-GR.50 |
| BR92 | 1 | 550S162-43 | 3'-1 15/16" | 4.56 | A913-GR.50 |
| BR193 | 3 | 550S162-43 | 2'-1 9/16" | 9.21 | A913-GR.50 |
| BR197 | 1 | 550S162-43 | 3'-4 7/8" | 4.92 | A913-GR.50 |
| BT73 | 1 | 550S162-43 | 5'-2" | 7.45 | A913-GR.50 |
| BT74 | 1 | 550S162-43 | 2'-10 3/4" | 4.18 | A913-GR.50 |
| BT144 | 1 | 550S162-43 | 3'-5 3/4" | 5.02 | A913-GR.50 |
| S87 | 3 | 550S162-43 | 10'-0 11/16" | 43.53 | A913-GR.50 |
| S111 | 2 | 550S162-43 | 10'-0 11/16" | 29.02 | A913-GR.50 |
| S171 | 1 | 550S162-43 | 10'-0 11/16" | 14.51 | A913-GR.50 |
| S172 | 1 | 550S162-43 | 10'-0 11/16" | 14.51 | A913-GR.50 |
| S173 | 2 | 550S162-43 | 10'-0 11/16" | 29.02 | A913-GR.50 |
| S178 | 1 | 550S162-43 | 1'-11 3/16" | 2.79 | A913-GR.50 |
| TT67 | 1 | 550S162-43 | 11'-3 3/4" | 16.32 | A913-GR.50 |
| | | TOTAL WEIGHT THIS DRAWING | | 207 | |

| REV | DESCRIPTION | DATE |
|---|---|---|
| | | |

| | | | |
|---|---|---|---|
| DESCRIPTION | | | |
| PROJECT NAME | | | |
| DRAWN BY | VN | JOB No. | DRG No. |
| DATE DRAWN | 07/19/2024 | | L51 |

Tekla structures

FRONT VIEW

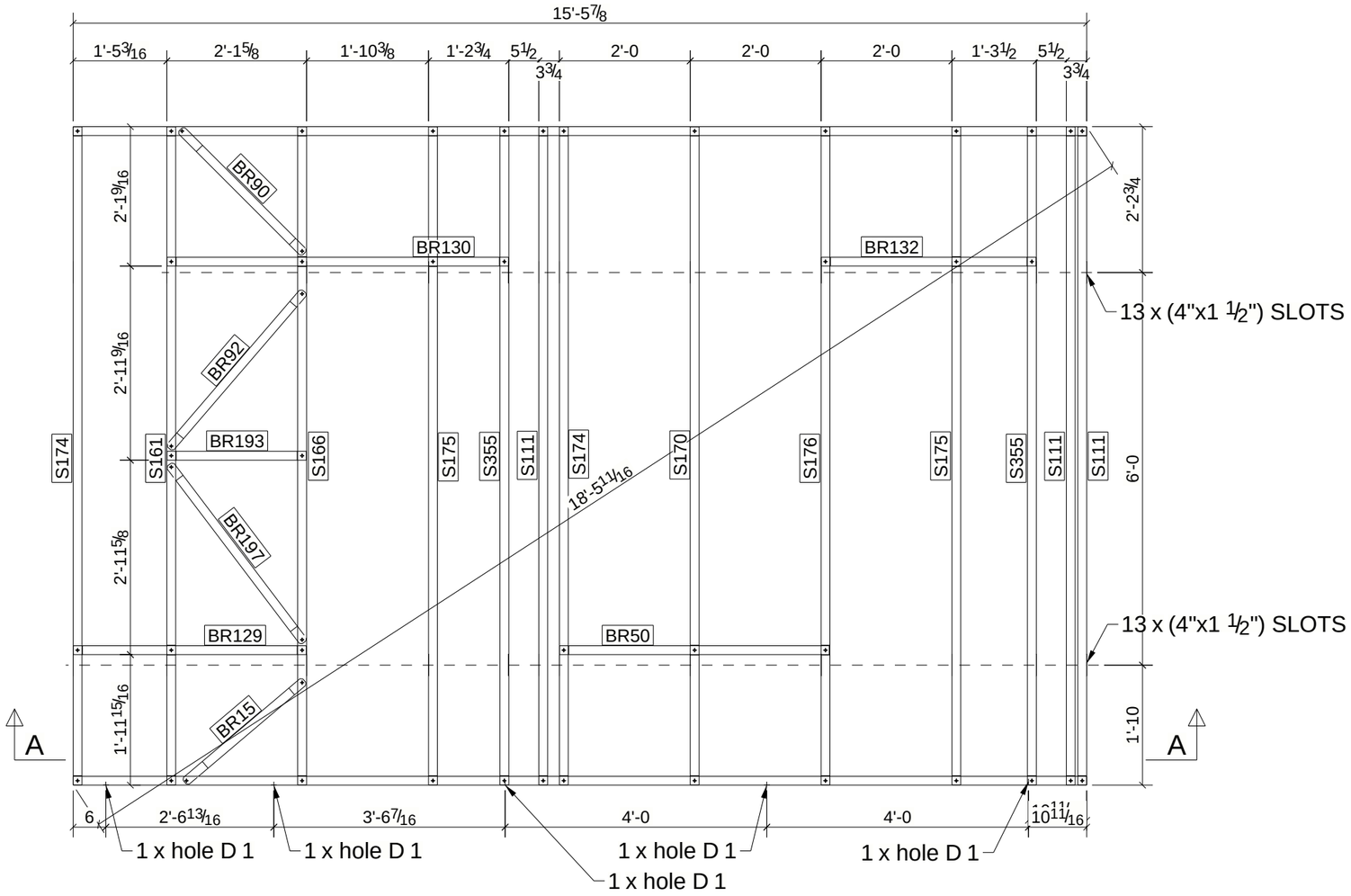


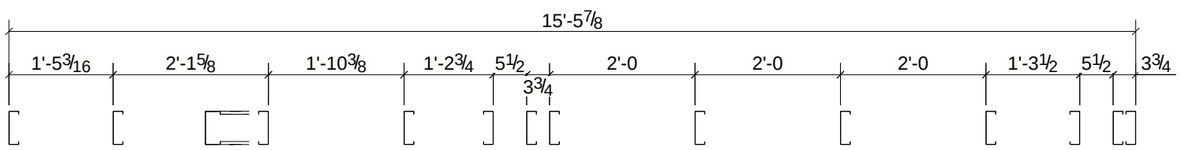


A - A

# BILL OF MATERIAL

| MARK | QTY | DESCRIPTION | LENGTH | WEIGHT | REMARKS |
|---|---|---|---|---|---|
| L52 | 1 | LOAD BEARNING WALL | | | SQ-2 |
| S175 | 1 | 550S162-43 | 10'-0 11/16" | 14.51 | A913-GR.50 |
| BR15 | 1 | 550S162-43 | 2'-4 13/16" | 3.46 | A913-GR.50 |
| BR50 | 1 | 550S162-43 | 4'-1 7/16" | 5.95 | A913-GR.50 |
| BR90 | 1 | 550S162-43 | 2'-8 1/8" | 3.86 | A913-GR.50 |
| BR92 | 1 | 550S162-43 | 3'-1 15/16" | 4.56 | A913-GR.50 |
| BR129 | 1 | 550S162-43 | 3'-6 3/4" | 5.14 | A913-GR.50 |
| BR130 | 1 | 550S162-43 | 5'-2 5/8" | 7.53 | A913-GR.50 |
| BR132 | 1 | 550S162-43 | 3'-3 3/8" | 4.74 | A913-GR.50 |
| BR193 | 1 | 550S162-43 | 2'-1 9/16" | 3.07 | A913-GR.50 |
| BR197 | 1 | 550S162-43 | 3'-4 7/8" | 4.92 | A913-GR.50 |
| BT89 | 1 | 550S162-43 | 15'-5 7/8" | 22.35 | A913-GR.50 |
| S111 | 3 | 550S162-43 | 10'-0 11/16" | 43.53 | A913-GR.50 |
| S161 | 1 | 550S162-43 | 10'-0 11/16" | 14.51 | A913-GR.50 |
| S166 | 1 | 550S162-43 | 10'-0 11/16" | 14.51 | A913-GR.50 |
| S170 | 1 | 550S162-43 | 10'-0 11/16" | 14.51 | A913-GR.50 |
| S174 | 2 | 550S162-43 | 10'-0 11/16" | 29.02 | A913-GR.50 |
| S175 | 1 | 550S162-43 | 10'-0 11/16" | 14.51 | A913-GR.50 |
| S176 | 1 | 550S162-43 | 10'-0 11/16" | 14.51 | A913-GR.50 |
| S355 | 2 | 550S162-43 | 10'-0 11/16" | 29.02 | A913-GR.50 |
| TT78 | 1 | 550S162-43 | 15'-5 7/8" | 22.35 | A913-GR.50 |
| | | TOTAL WEIGHT THIS DRAWING | | 277 | |

| REV | DESCRIPTION | DATE |
|---|---|---|
| | | |

| | | | |
|---|---|---|---|
| DESCRIPTION | | | |
| PROJECT NAME | | | |
| DRAWN BY | VN | JOB No. | DRG No. |
| DATE DRAWN | 08/14/2024 | | L52 |

Tekla structures

FRONT VIEW

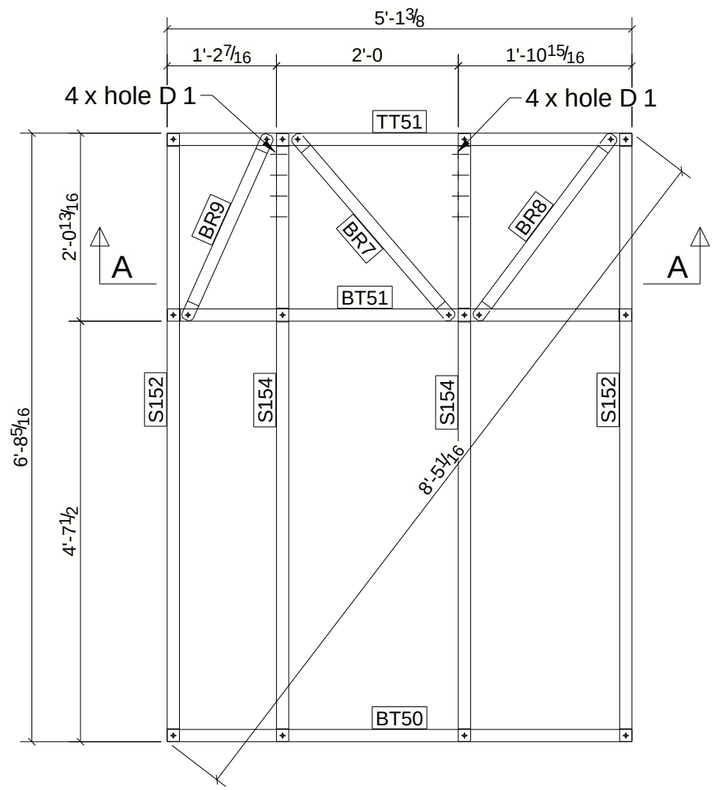


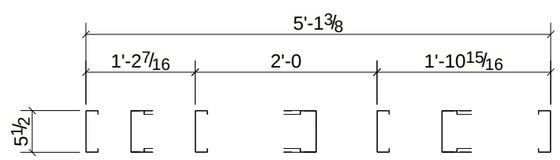


A - A

# BILL OF MATERIAL

| MARK | QTY | DESCRIPTION | LENGTH | WEIGHT | REMARKS |
|---|---|---|---|---|---|
| L53 | 1 | LOAD BEARNING WALL | | | SQ-2 |
| S154 | 1 | 550S162-43 | 6'-8 1/4" | 9.65 | A913-GR.50 |
| BR7 | 1 | 550S162-43 | 2'-7 7/8" | 3.84 | A913-GR.50 |
| BR8 | 1 | 550S162-43 | 2'-6 1/4" | 3.64 | A913-GR.50 |
| BR9 | 1 | 550S162-43 | 2'-2 3/4" | 3.21 | A913-GR.50 |
| BT50 | 1 | 550S162-43 | 5'-1 3/8" | 7.38 | A913-GR.50 |
| BT51 | 1 | 550S162-43 | 5'-1 1/4" | 7.37 | A913-GR.50 |
| S152 | 2 | 550S162-43 | 6'-8 1/4" | 19.29 | A913-GR.50 |
| S154 | 1 | 550S162-43 | 6'-8 1/4" | 9.65 | A913-GR.50 |
| TT51 | 1 | 550S162-43 | 5'-1 3/8" | 7.38 | A913-GR.50 |
| | | TOTAL WEIGHT THIS DRAWING | | 71 | |

| REV | DESCRIPTION | DATE |
|---|---|---|
| | | |

| | | | |
|---|---|---|---|
| DESCRIPTION | | | |
| PROJECT NAME | | | |
| DRAWN BY | VN | JOB No. | DRG No. |
| DATE DRAWN | 07/19/2024 | | L53 |

Tekla structures

FRONT VIEW

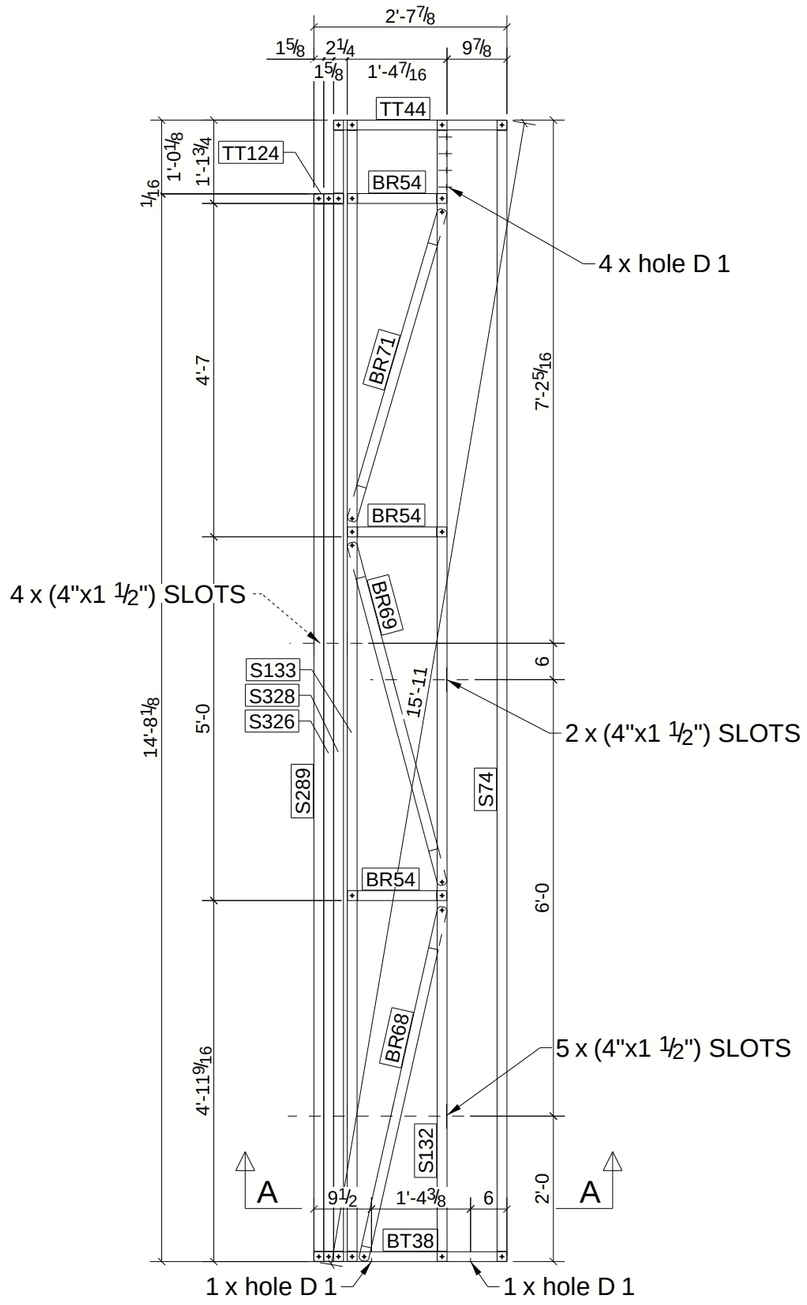


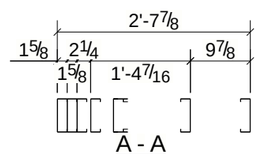


A - A

# BILL OF MATERIAL

| MARK | QTY | DESCRIPTION | LENGTH | WEIGHT | REMARKS |
|---|---|---|---|---|---|
| L54 | 1 | LOAD BEARNING WALL | | | SQ-2 |
| S74 | 1 | 550S162-43 | 15'-8 1/4" | 22.63 | A913-GR.50 |
| BR54 | 3 | 550S162-43 | 1'-4 3/8" | 5.91 | A913-GR.50 |
| BR68 | 1 | 550S162-43 | 4'-11 13/16" | 7.19 | A913-GR.50 |
| BR69 | 1 | 550S162-43 | 4'-10 7/16" | 7.03 | A913-GR.50 |
| BR71 | 1 | 550S162-43 | 4'-5 5/8" | 6.45 | A913-GR.50 |
| BT38 | 1 | 550S162-43 | 2'-7 7/8" | 3.83 | A913-GR.50 |
| S132 | 1 | 550S162-43 | 15'-8 1/4" | 22.63 | A913-GR.50 |
| S133 | 1 | 550S162-43 | 15'-8 1/4" | 22.63 | A913-GR.50 |
| S289 | 1 | 550S162-43 | 14'-8 1/16" | 21.17 | A913-GR.50 |
| S326 | 1 | 550S162-43 | 14'-8 1/16" | 21.17 | A913-GR.50 |
| S328 | 1 | 550S162-43 | 15'-8 1/4" | 22.63 | A913-GR.50 |
| TT44 | 1 | 550S162-43 | 2'-4 5/8" | 3.44 | A913-GR.50 |
| TT124 | 1 | 550S162-43 | 0'-4 7/8" | 0.59 | A913-GR.50 |
| | | TOTAL WEIGHT THIS DRAWING | | 167 | |

| REV | DESCRIPTION | DATE |
|---|---|---|
| | | |

| | | | |
|---|---|---|---|
| DESCRIPTION | | | |
| PROJECT NAME | | | |
| DRAWN BY | VN | JOB No. | DRG No. |
| DATE DRAWN | 07/19/2024 | | L54 |

Tekla structures

# BILL OF MATERIAL

| MARK | QTY | DESCRIPTION | LENGTH | WEIGHT | REMARKS |
|---|---|---|---|---|---|
| L55 | 1 | LOAD BEARNING WALL | | | SQ-2 |
| S335 | 1 | 550S162-43 | 6'-8 1/8" | 9.63 | A913-GR.50 |
| BT131 | 1 | 550S162-43 | 11'-6 3/4" | 16.68 | A913-GR.50 |
| S335 | 6 | 550S162-43 | 6'-8 1/8" | 57.79 | A913-GR.50 |
| TT127 | 1 | 550S162-43 | 11'-6 3/4" | 16.68 | A913-GR.50 |
| | | TOTAL WEIGHT THIS DRAWING | | 101 | |

FRONT VIEW

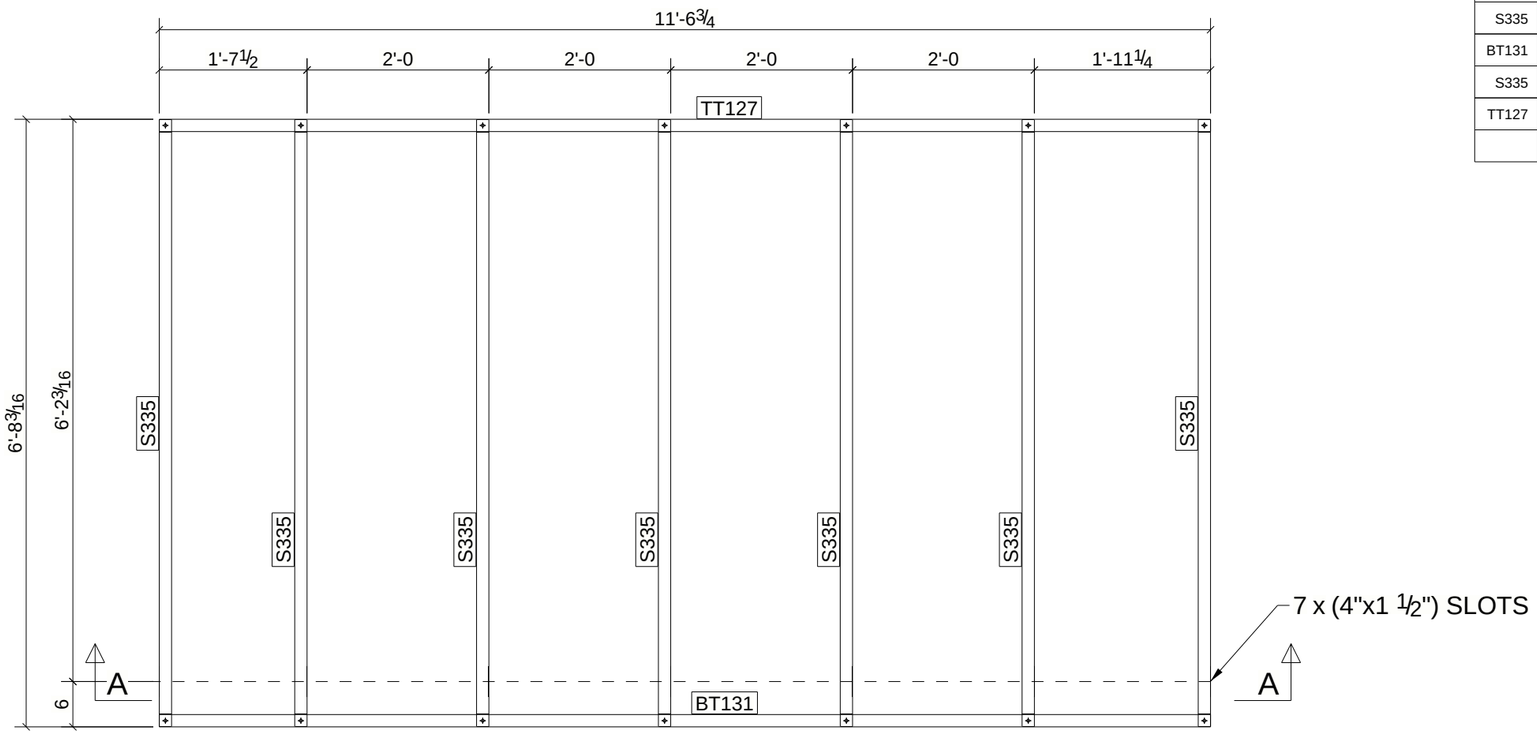


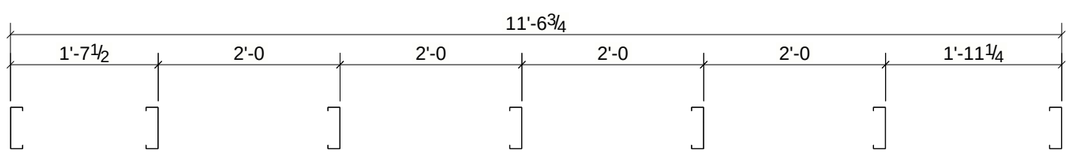


A - A

| REV | DESCRIPTION | DATE |
|---|---|---|
| | | |

| | | | |
|---|---|---|---|
| DESCRIPTION | | | |
| PROJECT NAME | | | |
| DRAWN BY | VN | JOB No. | DRG No. |
| DATE DRAWN | 07/10/2024 | | L55 |

Tekla structures

FRONT VIEW

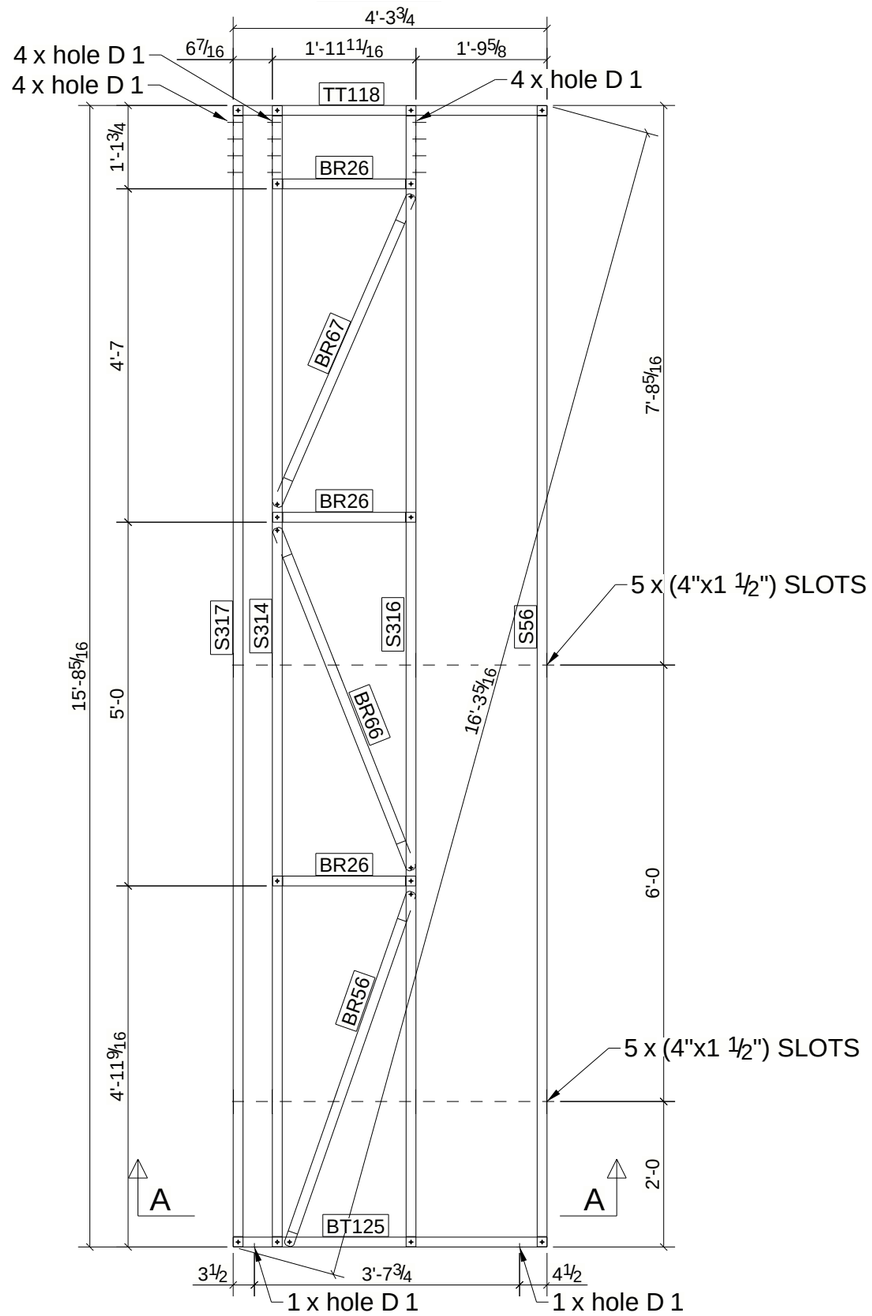


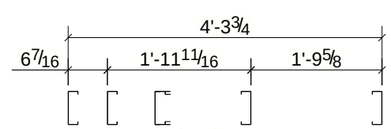


A - A

# BILL OF MATERIAL

| MARK | QTY | DESCRIPTION | LENGTH | WEIGHT | REMARKS |
|---|---|---|---|---|---|
| L56 | 1 | LOAD BEARNING WALL | | | SQ-2 |
| S56 | 1 | 550S162-43 | 15'-8 1/4" | 22.63 | A913-GR.50 |
| BR26 | 3 | 550S162-43 | 1'-11 5/8" | 8.51 | A913-GR.50 |
| BR56 | 1 | 550S162-43 | 5'-1 7/8" | 7.44 | A913-GR.50 |
| BR66 | 1 | 550S162-43 | 5'-0 5/8" | 7.29 | A913-GR.50 |
| BR67 | 1 | 550S162-43 | 4'-8 1/16" | 6.74 | A913-GR.50 |
| BT125 | 1 | 550S162-43 | 4'-3 3/4" | 6.23 | A913-GR.50 |
| S314 | 1 | 550S162-43 | 15'-8 1/4" | 22.63 | A913-GR.50 |
| S316 | 1 | 550S162-43 | 15'-8 1/4" | 22.63 | A913-GR.50 |
| S317 | 1 | 550S162-43 | 15'-8 1/4" | 22.63 | A913-GR.50 |
| TT118 | 1 | 550S162-43 | 4'-3 3/4" | 6.23 | A913-GR.50 |
| | | TOTAL WEIGHT THIS DRAWING | | 133 | |

| REV | DESCRIPTION | DATE |
|---|---|---|
| | | |

| | | | |
|---|---|---|---|
| DESCRIPTION | | | |
| PROJECT NAME | | | |
| DRAWN BY | VN | JOB No. | DRG No. |
| DATE DRAWN | 07/19/2024 | | L56 |

Tekla structures

FRONT VIEW

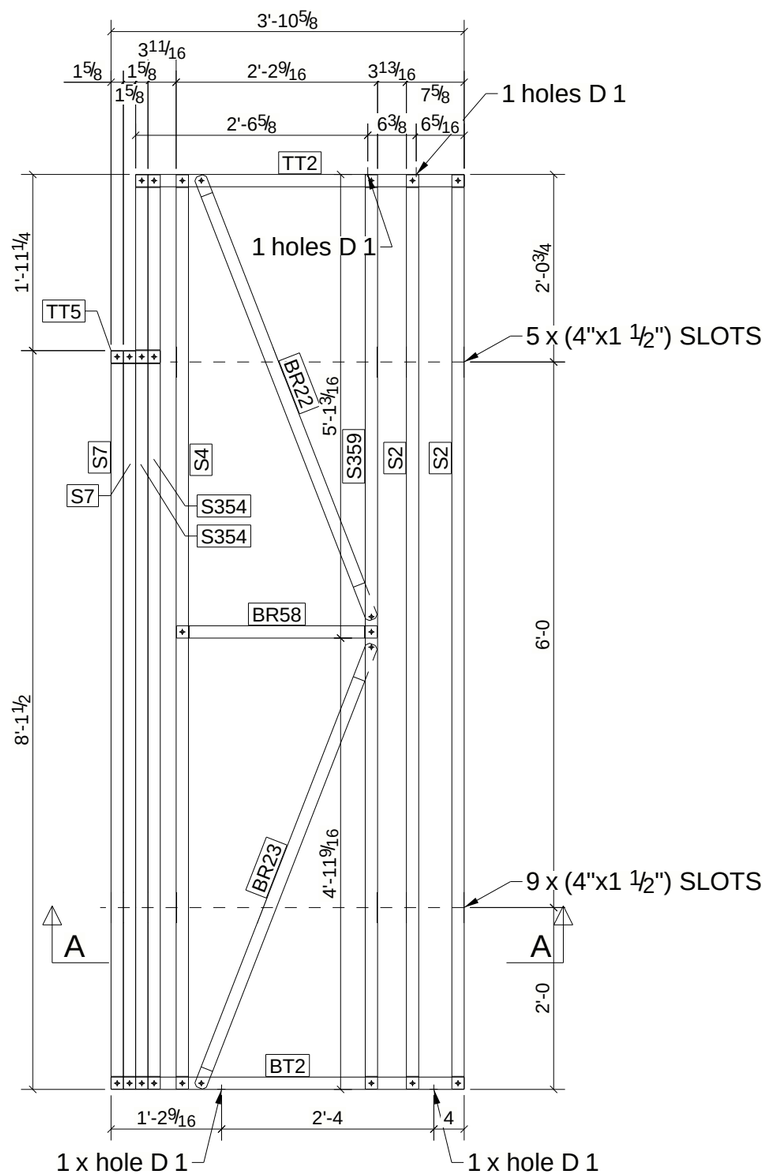


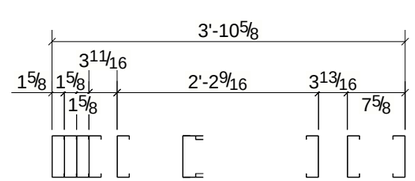


A - A

# BILL OF MATERIAL

| MARK | QTY | DESCRIPTION | LENGTH | WEIGHT | REMARKS |
|---|---|---|---|---|---|
| L57 | 1 | LOAD BEARNING WALL | | | SQ-2 |
| S2 | 1 | 550S162-43 | 10'-0 11/16" | 14.51 | A913-GR.50 |
| BR22 | 1 | 550S162-43 | 5'-2 13/16" | 7.55 | A913-GR.50 |
| BR23 | 1 | 550S162-43 | 5'-2 13/16" | 7.55 | A913-GR.50 |
| BR58 | 1 | 550S162-43 | 2'-2 1/2" | 3.19 | A913-GR.50 |
| BT2 | 1 | 550S162-43 | 3'-10 5/8" | 5.60 | A913-GR.50 |
| S2 | 1 | 550S162-43 | 10'-0 11/16" | 14.51 | A913-GR.50 |
| S4 | 1 | 550S162-43 | 10'-0 11/16" | 14.51 | A913-GR.50 |
| S7 | 2 | 550S162-43 | 8'-1 7/16" | 23.43 | A913-GR.50 |
| S354 | 2 | 550S162-43 | 10'-0 11/16" | 29.02 | A913-GR.50 |
| S359 | 1 | 550S162-43 | 10'-0 11/16" | 14.51 | A913-GR.50 |
| TT2 | 1 | 550S162-43 | 3'-7 3/8" | 5.21 | A913-GR.50 |
| TT5 | 1 | 550S162-43 | 0'-6 1/2" | 0.78 | A913-GR.50 |
| | | TOTAL WEIGHT THIS DRAWING | | 140 | |

| REV | DESCRIPTION | DATE |
|---|---|---|
| | | |

| | | | |
|---|---|---|---|
| DESCRIPTION | | | |
| PROJECT NAME | | | |
| DRAWN BY | | JOB No. | DRG No. |
| DATE DRAWN | 07/19/2024 | | L57 |

Tekla structures

FRONT VIEW

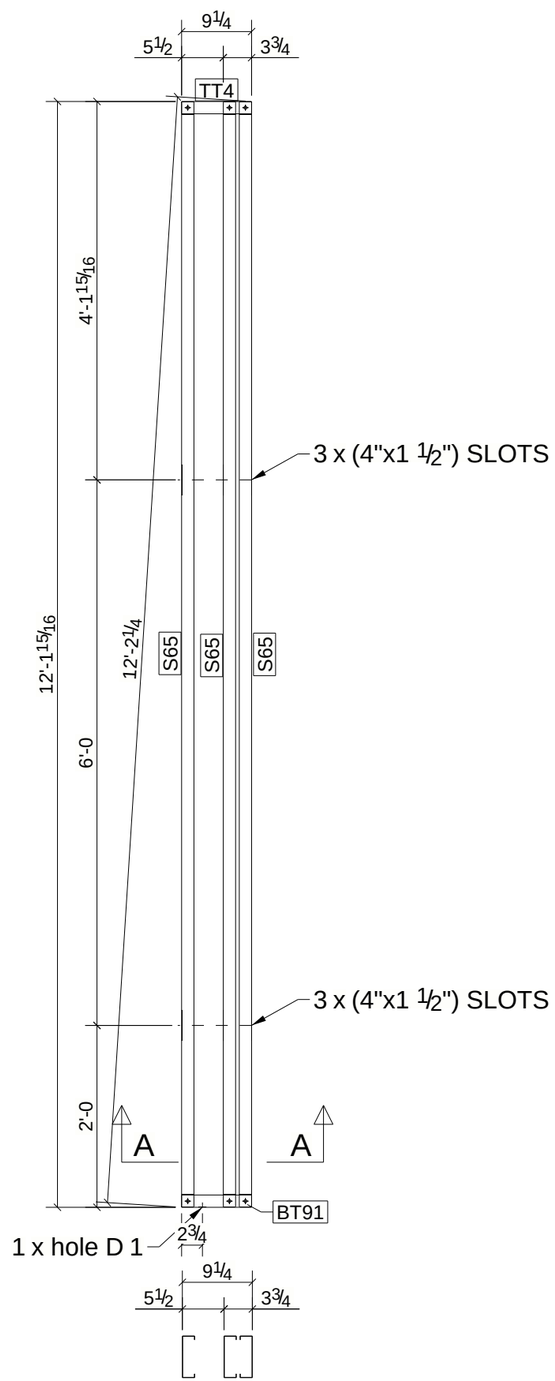


A - A

# BILL OF MATERIAL

| MARK | QTY | DESCRIPTION | LENGTH | WEIGHT | REMARKS |
|---|---|---|---|---|---|
| L58 | 1 | LOAD BEARNING WALL | | | SQ-2 |
| S65 | 1 | 550S162-43 | 12'-1 7/8" | 17.54 | A913-GR.50 |
| BT91 | 1 | 550S162-43 | 0'-9 1/4" | 1.11 | A913-GR.50 |
| S65 | 2 | 550S162-43 | 12'-1 7/8" | 35.08 | A913-GR.50 |
| TT4 | 1 | 550S162-43 | 0'-9 1/4" | 1.11 | A913-GR.50 |
| | | TOTAL WEIGHT THIS DRAWING | | 55 | |

| REV | DESCRIPTION | DATE |
|---|---|---|
| | | |

| | | | |
|---|---|---|---|
| DESCRIPTION | | | |
| PROJECT NAME | | | |
| DRAWN BY | VN | JOB No. | DRG No. |
| DATE DRAWN | 07/19/2024 | | L58 |

Tekla structures

FRONT VIEW

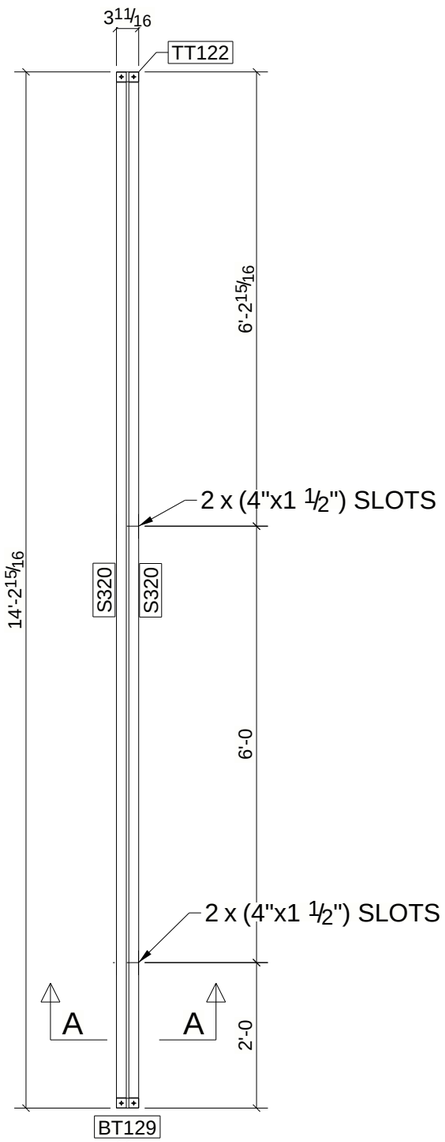


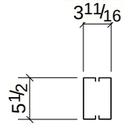


A - A

# BILL OF MATERIAL

| MARK | QTY | DESCRIPTION | LENGTH | WEIGHT | REMARKS |
|---|---|---|---|---|---|
| L59 | 1 | LOAD BEARNING WALL | | | SQ-2 |
| S320 | 1 | 550S162-43 | 14'-2 7/8" | 20.54 | A913-GR.50 |
| BT129 | 1 | 550S162-43 | 0'-3 11/16" | 0.44 | A913-GR.50 |
| S320 | 1 | 550S162-43 | 14'-2 7/8" | 20.54 | A913-GR.50 |
| TT122 | 1 | 550S162-43 | 0'-3 11/16" | 0.44 | A913-GR.50 |
| | | TOTAL WEIGHT THIS DRAWING | | 42 | |

| REV | DESCRIPTION | DATE |
|---|---|---|
| | | |

| | | | |
|---|---|---|---|
| DESCRIPTION | | | |
| PROJECT NAME | | | |
| DRAWN BY | VN | JOB No. | DRG No. |
| DATE DRAWN | 07/10/2024 | | L59 |

Tekla structures

FRONT VIEW

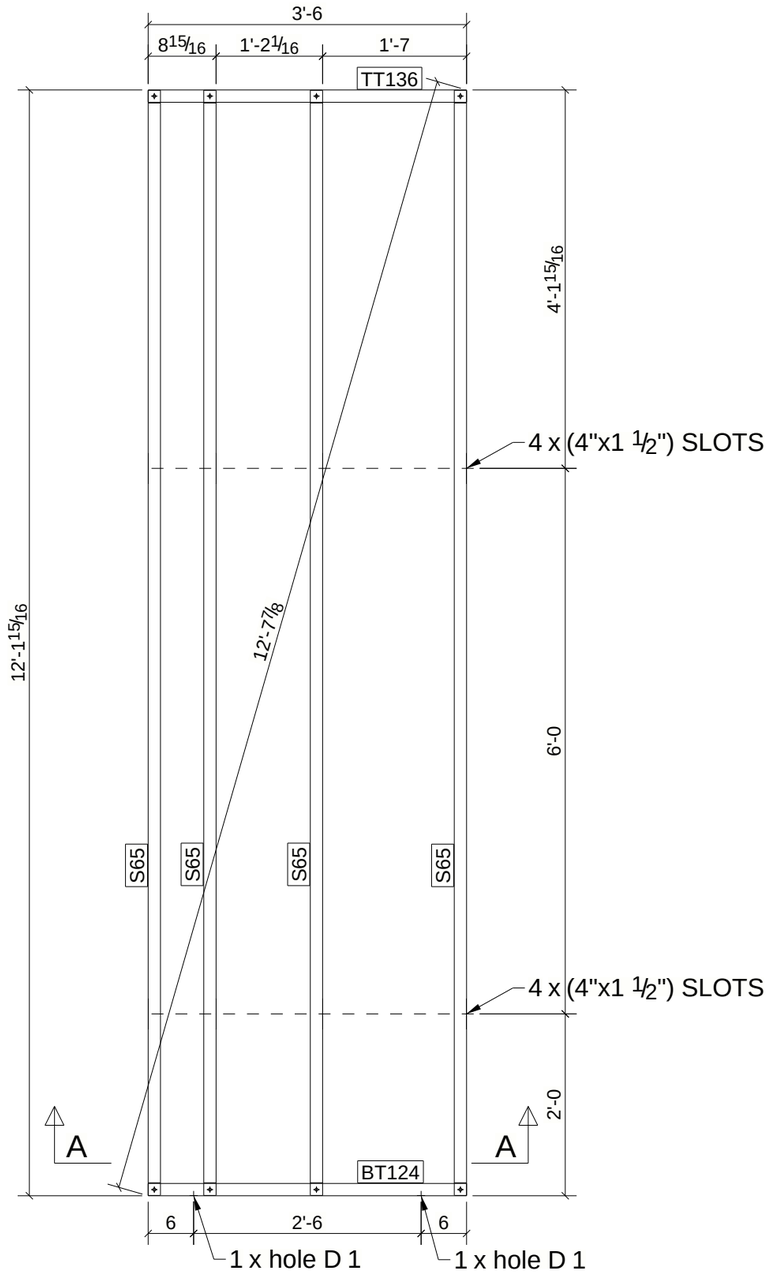


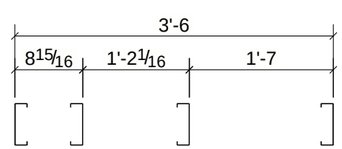


A - A

# BILL OF MATERIAL

| MARK | QTY | DESCRIPTION | LENGTH | WEIGHT | REMARKS |
|---|---|---|---|---|---|
| L60 | 1 | LOAD BEARNING WALL | | | SQ-2 |
| S65 | 1 | 550S162-43 | 12'-1 7/8" | 17.54 | A913-GR.50 |
| BT124 | 1 | 550S162-43 | 3'-6" | 5.05 | A913-GR.50 |
| S65 | 3 | 550S162-43 | 12'-1 7/8" | 52.61 | A913-GR.50 |
| TT136 | 1 | 550S162-43 | 3'-6" | 5.05 | A913-GR.50 |
| | | TOTAL WEIGHT THIS DRAWING | | 80 | |

| REV | DESCRIPTION | DATE |
|---|---|---|
| | | |

| | | | |
|---|---|---|---|
| DESCRIPTION | | | |
| PROJECT NAME | | | |
| DRAWN BY | VN | JOB No. | DRG No. |
| DATE DRAWN | 07/19/2024 | | L60 |

Tekla structures

FRONT VIEW

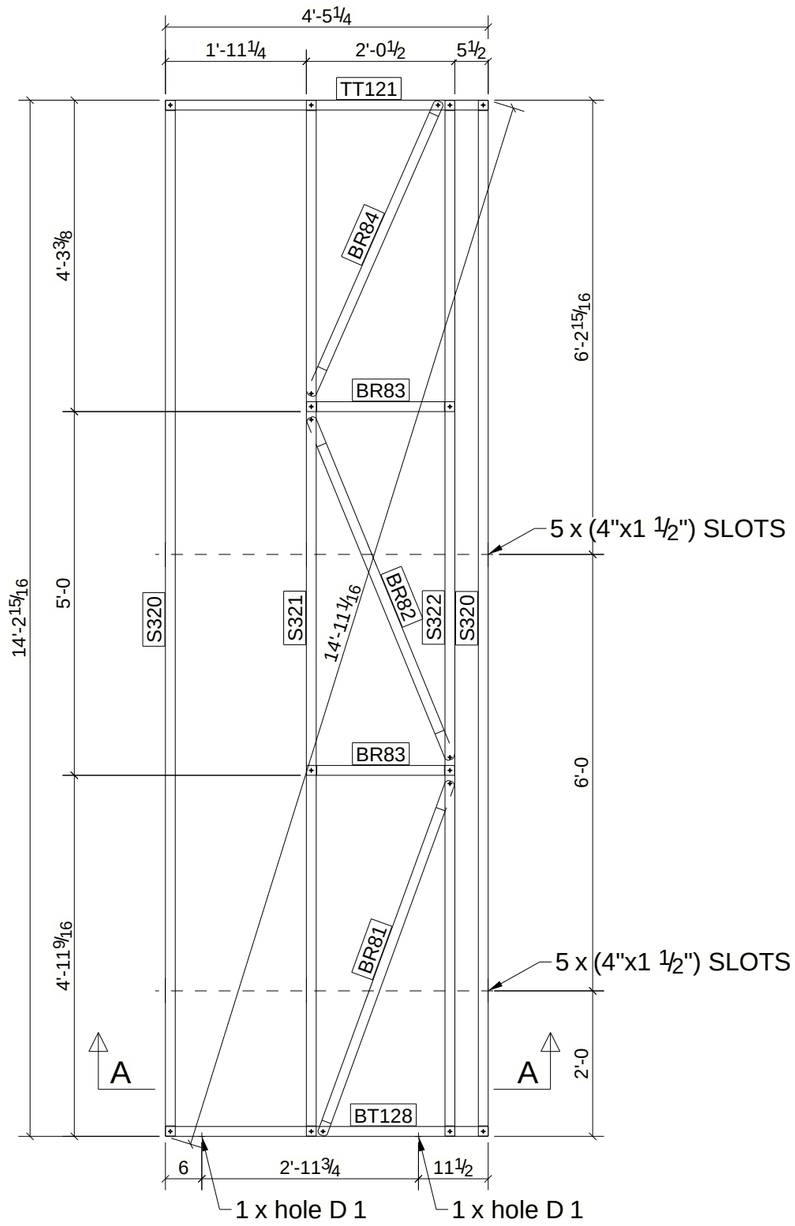


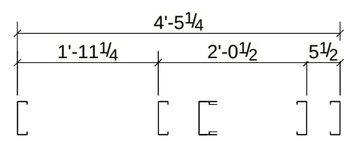


A - A

# BILL OF MATERIAL

| MARK | QTY | DESCRIPTION | LENGTH | WEIGHT | REMARKS |
|---|---|---|---|---|---|
| L61 | 1 | LOAD BEARNING WALL | | | SQ-2 |
| S320 | 1 | 550S162-43 | 14'-2 7/8" | 20.54 | A913-GR.50 |
| BR81 | 1 | 550S162-43 | 5'-2 3/16" | 7.47 | A913-GR.50 |
| BR82 | 1 | 550S162-43 | 5'-0 15/16" | 7.33 | A913-GR.50 |
| BR83 | 2 | 550S162-43 | 2'-0 7/16" | 5.87 | A913-GR.50 |
| BR84 | 1 | 550S162-43 | 4'-5" | 6.37 | A913-GR.50 |
| BT128 | 1 | 550S162-43 | 4'-5 1/4" | 6.40 | A913-GR.50 |
| S320 | 1 | 550S162-43 | 14'-2 7/8" | 20.54 | A913-GR.50 |
| S321 | 1 | 550S162-43 | 14'-2 7/8" | 20.54 | A913-GR.50 |
| S322 | 1 | 550S162-43 | 14'-2 7/8" | 20.54 | A913-GR.50 |
| TT121 | 1 | 550S162-43 | 4'-5 1/4" | 6.40 | A913-GR.50 |
| | | TOTAL WEIGHT THIS DRAWING | | 122 | |

| REV | DESCRIPTION | DATE |
|---|---|---|
| | | |

| | | | |
|---|---|---|---|
| DESCRIPTION | | | |
| PROJECT NAME | | | |
| DRAWN BY | VN | JOB No. | DRG No. |
| DATE DRAWN | 07/19/2024 | | L61 |

Tekla structures

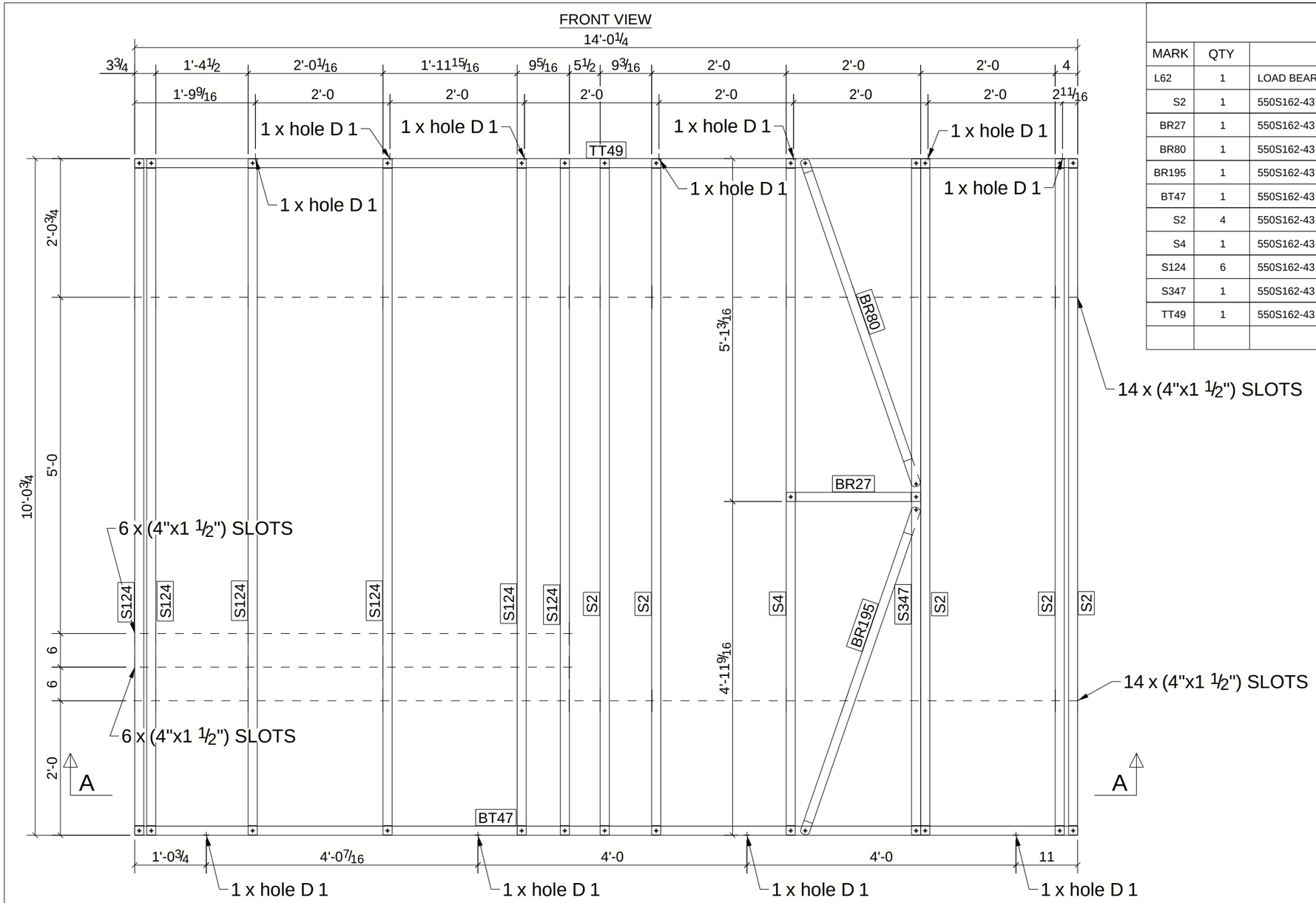


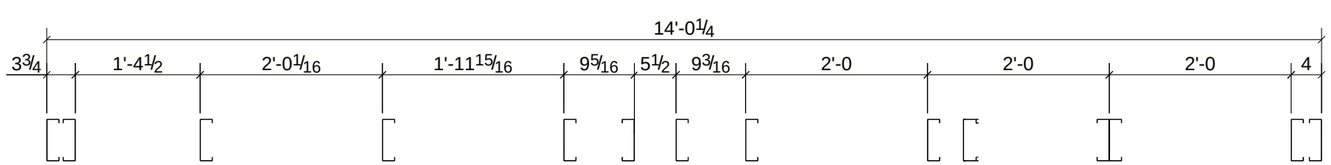


A - A

# BILL OF MATERIAL

| MARK | QTY | DESCRIPTION | LENGTH | WEIGHT | REMARKS |
|---|---|---|---|---|---|
| L62 | 1 | LOAD BEARNING WALL | | | SQ-2 |
| S2 | 1 | 550S162-43 | 10'-0 11/16" | 14.51 | A913-GR.50 |
| BR27 | 1 | 550S162-43 | 1'-11 15/16" | 2.88 | A913-GR.50 |
| BR80 | 1 | 550S162-43 | 5'-1 11/16" | 7.41 | A913-GR.50 |
| BR195 | 1 | 550S162-43 | 5'-1 11/16" | 7.41 | A913-GR.50 |
| BT47 | 1 | 550S162-43 | 14'-0 1/4" | 20.23 | A913-GR.50 |
| S2 | 4 | 550S162-43 | 10'-0 11/16" | 58.04 | A913-GR.50 |
| S4 | 1 | 550S162-43 | 10'-0 11/16" | 14.51 | A913-GR.50 |
| S124 | 6 | 550S162-43 | 10'-0 11/16" | 87.06 | A913-GR.50 |
| S347 | 1 | 550S162-43 | 10'-0 11/16" | 14.51 | A913-GR.50 |
| TT49 | 1 | 550S162-43 | 14'-0 1/4" | 20.23 | A913-GR.50 |
| | | TOTAL WEIGHT THIS DRAWING | | 247 | |

| REV | DESCRIPTION | DATE |
|---|---|---|
| | | |

| | | | |
|---|---|---|---|
| DESCRIPTION | | | |
| PROJECT NAME | | | |
| DRAWN BY | | JOB No. | DRG No. |
| DATE DRAWN | 08/14/2024 | | L62 |

Tekla structures

FRONT VIEW

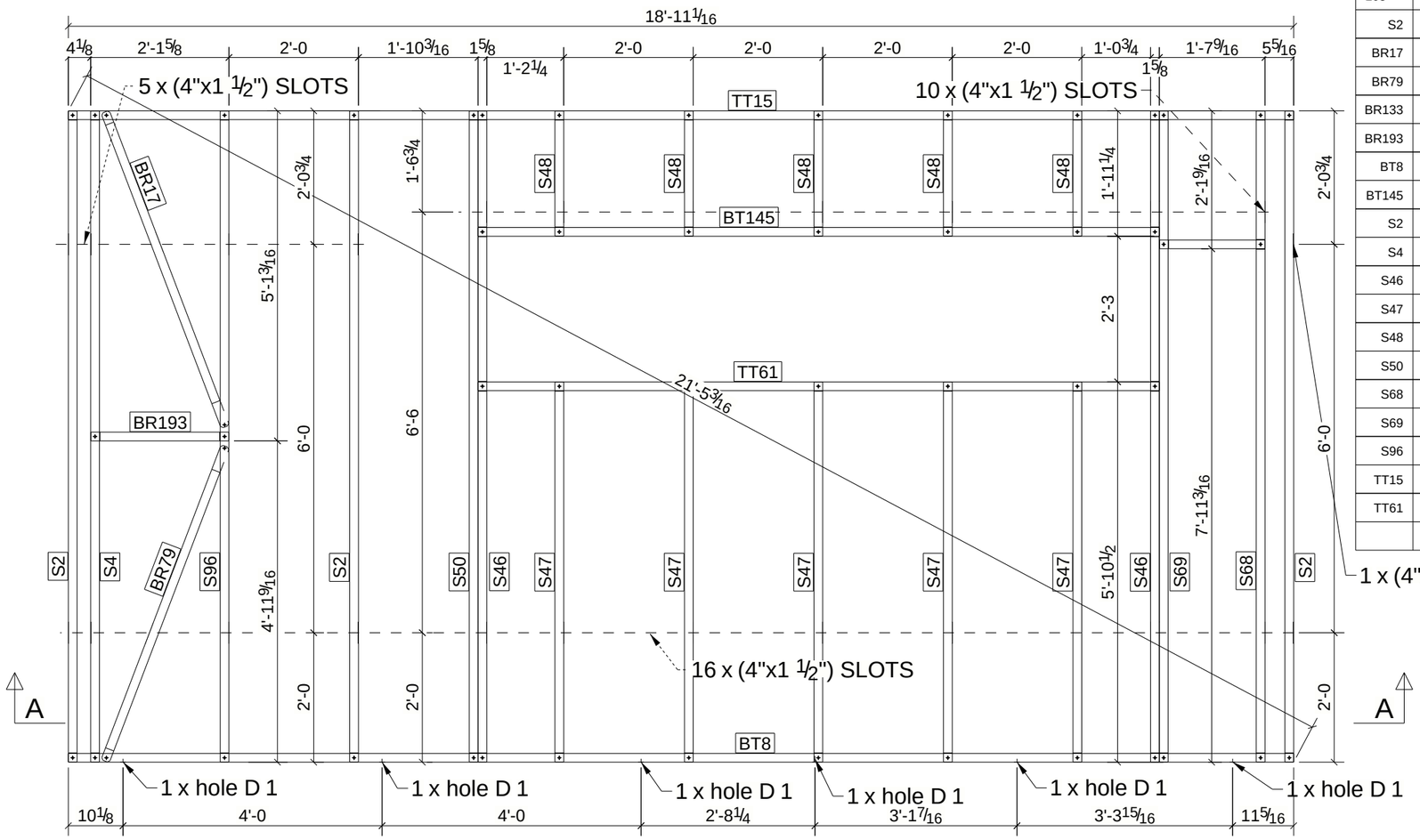


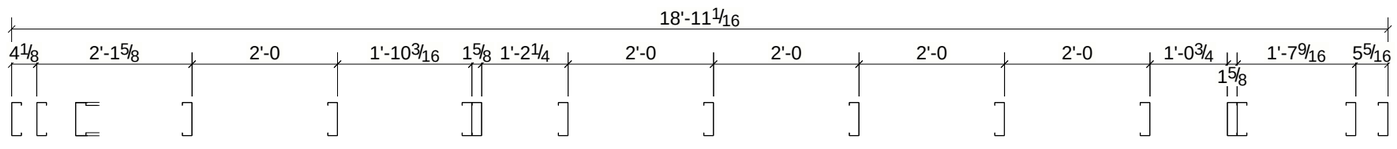


A - A

# BILL OF MATERIAL

| MARK | QTY | DESCRIPTION | LENGTH | WEIGHT | REMARKS |
|---|---|---|---|---|---|
| L63 | 1 | LOAD BEARNING WALL | | | SQ-2 |
| S2 | 1 | 550S162-43 | 10'-0 11/16" | 14.51 | A913-GR.50 |
| BR17 | 1 | 550S162-43 | 5'-2 1/2" | 7.51 | A913-GR.50 |
| BR79 | 1 | 550S162-43 | 5'-2 1/2" | 7.51 | A913-GR.50 |
| BR133 | 1 | 550S162-43 | 1'-7 9/16" | 2.35 | A913-GR.50 |
| BR193 | 1 | 550S162-43 | 2'-1 9/16" | 3.07 | A913-GR.50 |
| BT8 | 1 | 550S162-43 | 18'-11 1/16" | 27.31 | A913-GR.50 |
| BT145 | 1 | 550S162-43 | 10'-6 1/4" | 15.18 | A913-GR.50 |
| S2 | 2 | 550S162-43 | 10'-0 11/16" | 29.02 | A913-GR.50 |
| S4 | 1 | 550S162-43 | 10'-0 11/16" | 14.51 | A913-GR.50 |
| S46 | 2 | 550S162-43 | 10'-0 11/16" | 29.02 | A913-GR.50 |
| S47 | 5 | 550S162-43 | 5'-10 7/16" | 42.34 | A913-GR.50 |
| S48 | 5 | 550S162-43 | 1'-11 3/16" | 13.93 | A913-GR.50 |
| S50 | 1 | 550S162-43 | 10'-0 11/16" | 14.51 | A913-GR.50 |
| S68 | 1 | 550S162-43 | 10'-0 11/16" | 14.51 | A913-GR.50 |
| S69 | 1 | 550S162-43 | 10'-0 11/16" | 14.51 | A913-GR.50 |
| S96 | 1 | 550S162-43 | 10'-0 11/16" | 14.51 | A913-GR.50 |
| TT15 | 1 | 550S162-43 | 18'-11 1/16" | 27.31 | A913-GR.50 |
| TT61 | 1 | 550S162-43 | 10'-6 1/4" | 15.18 | A913-GR.50 |
| | | TOTAL WEIGHT THIS DRAWING | | 307 | |

| REV | DESCRIPTION | DATE |
|---|---|---|
| | | |

| | | | |
|---|---|---|---|
| DESCRIPTION | | | |
| PROJECT NAME | | | |
| DRAWN BY | VN | JOB No. | DRG No. |
| DATE DRAWN | 07/19/2024 | | L63 |

Tekla structures

FRONT VIEW

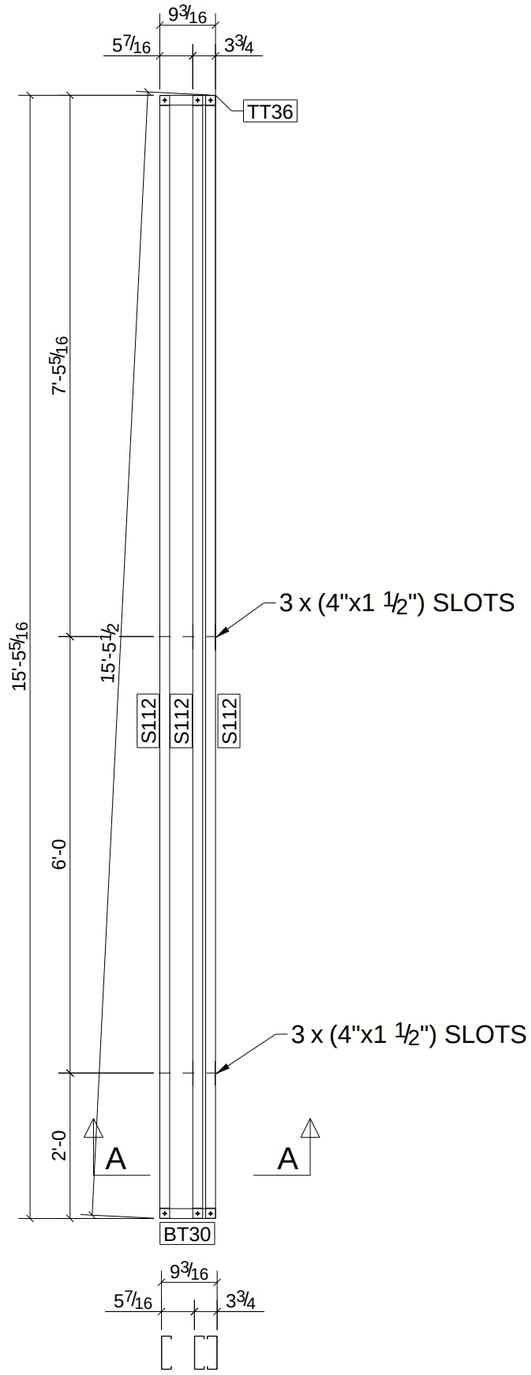


A - A

# BILL OF MATERIAL

| MARK | QTY | DESCRIPTION | LENGTH | WEIGHT | REMARKS |
|---|---|---|---|---|---|
| L64 | 1 | LOAD BEARNING WALL | | | SQ-2 |
| S112 | 1 | 550S162-43 | 15'-5 3/16" | 22.27 | A913-GR.50 |
| BT30 | 1 | 550S162-43 | 0'-9 3/16" | 1.10 | A913-GR.50 |
| S112 | 2 | 550S162-43 | 15'-5 3/16" | 44.54 | A913-GR.50 |
| TT36 | 1 | 550S162-43 | 0'-9 3/16" | 1.10 | A913-GR.50 |
| | | TOTAL WEIGHT THIS DRAWING | | 69 | |

| REV | DESCRIPTION | DATE |
|---|---|---|
| | | |

| | | | |
|---|---|---|---|
| DESCRIPTION | | | |
| PROJECT NAME | | | |
| DRAWN BY | VN | JOB No. | DRG No. |
| DATE DRAWN | 07/10/2024 | | L64 |

Tekla structures

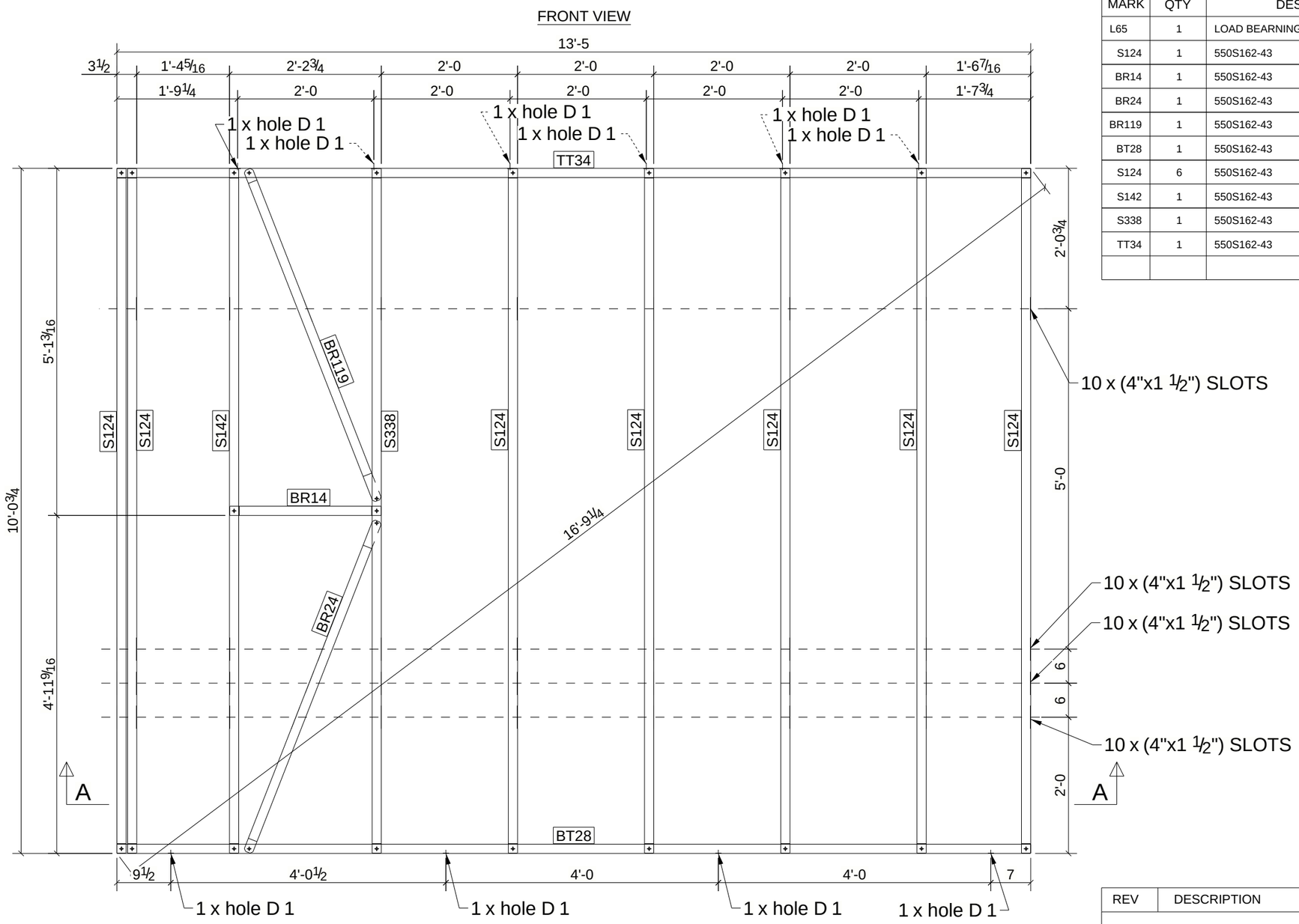


# BILL OF MATERIAL

| MARK | QTY | DESCRIPTION | LENGTH | WEIGHT | REMARKS |
|---|---|---|---|---|---|
| L65 | 1 | LOAD BEARNING WALL | | | SQ-2 |
| S124 | 1 | 550S162-43 | 10'-0 11/16" | 14.51 | A913-GR.50 |
| BR14 | 1 | 550S162-43 | 2'-2 11/16" | 3.21 | A913-GR.50 |
| BR24 | 1 | 550S162-43 | 5'-2 11/16" | 7.54 | A913-GR.50 |
| BR119 | 1 | 550S162-43 | 5'-2 11/16" | 7.54 | A913-GR.50 |
| BT28 | 1 | 550S162-43 | 13'-5" | 19.36 | A913-GR.50 |
| S124 | 6 | 550S162-43 | 10'-0 11/16" | 87.06 | A913-GR.50 |
| S142 | 1 | 550S162-43 | 10'-0 11/16" | 14.51 | A913-GR.50 |
| S338 | 1 | 550S162-43 | 10'-0 11/16" | 14.51 | A913-GR.50 |
| TT34 | 1 | 550S162-43 | 13'-5" | 19.36 | A913-GR.50 |
| | | TOTAL WEIGHT THIS DRAWING | | 188 | |

| REV | DESCRIPTION | DATE |
|---|---|---|
| | | |

| | | | |
|---|---|---|---|
| DESCRIPTION | | | |
| PROJECT NAME | | | |
| DRAWN BY | VN | JOB No. | DRG No. |
| DATE DRAWN | 07/19/2024 | | L65 |

Tekla structures

FRONT VIEW

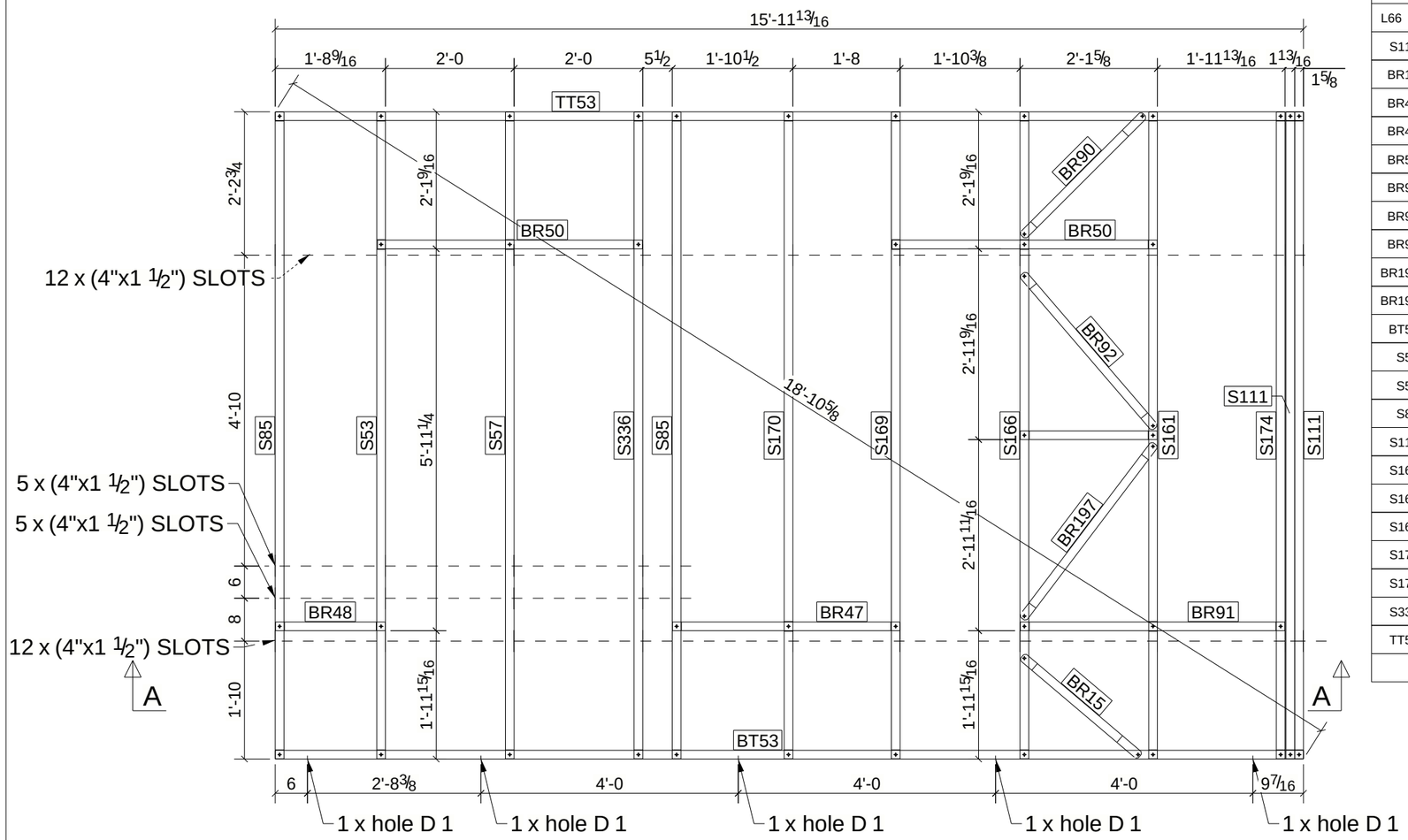


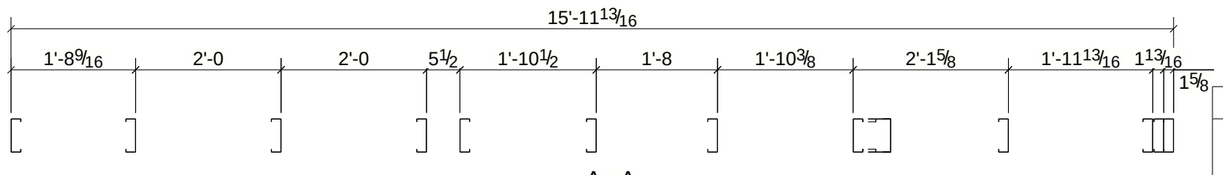


A - A

# BILL OF MATERIAL

| MARK | QTY | DESCRIPTION | LENGTH | WEIGHT | REMARKS |
|---|---|---|---|---|---|
| L66 | 1 | LOAD BEARNING WALL | | | SQ-2 |
| S111 | 1 | 550S162-43 | 10'-0 11/16" | 14.51 | A913-GR.50 |
| BR15 | 1 | 550S162-43 | 2'-4 13/16" | 3.46 | A913-GR.50 |
| BR47 | 1 | 550S162-43 | 3'-6 7/16" | 5.10 | A913-GR.50 |
| BR48 | 1 | 550S162-43 | 1'-8 1/2" | 2.46 | A913-GR.50 |
| BR50 | 2 | 550S162-43 | 4'-1 7/16" | 11.89 | A913-GR.50 |
| BR90 | 1 | 550S162-43 | 2'-8 1/8" | 3.86 | A913-GR.50 |
| BR91 | 1 | 550S162-43 | 4'-1 3/8" | 5.93 | A913-GR.50 |
| BR92 | 1 | 550S162-43 | 3'-1 15/16" | 4.56 | A913-GR.50 |
| BR193 | 1 | 550S162-43 | 2'-1 9/16" | 3.07 | A913-GR.50 |
| BR197 | 1 | 550S162-43 | 3'-4 7/8" | 4.92 | A913-GR.50 |
| BT53 | 1 | 550S162-43 | 15'-11 13*** | 23.06 | A913-GR.50 |
| S53 | 1 | 550S162-43 | 10'-0 11/16" | 14.51 | A913-GR.50 |
| S57 | 1 | 550S162-43 | 10'-0 11/16" | 14.51 | A913-GR.50 |
| S85 | 2 | 550S162-43 | 10'-0 11/16" | 29.02 | A913-GR.50 |
| S111 | 1 | 550S162-43 | 10'-0 11/16" | 14.51 | A913-GR.50 |
| S161 | 1 | 550S162-43 | 10'-0 11/16" | 14.51 | A913-GR.50 |
| S166 | 1 | 550S162-43 | 10'-0 11/16" | 14.51 | A913-GR.50 |
| S169 | 1 | 550S162-43 | 10'-0 11/16" | 14.51 | A913-GR.50 |
| S170 | 1 | 550S162-43 | 10'-0 11/16" | 14.51 | A913-GR.50 |
| S174 | 1 | 550S162-43 | 10'-0 11/16" | 14.51 | A913-GR.50 |
| S336 | 1 | 550S162-43 | 10'-0 11/16" | 14.51 | A913-GR.50 |
| TT53 | 1 | 550S162-43 | 15'-11 13*** | 23.06 | A913-GR.50 |
| | | TOTAL WEIGHT THIS DRAWING | | 266 | |

| REV | DESCRIPTION | DATE |
|---|---|---|
| | | |

| | | | |
|---|---|---|---|
| DESCRIPTION | | | |
| PROJECT NAME | | | |
| DRAWN BY | VN | JOB No. | DRG No. |
| DATE DRAWN | 07/19/2024 | | L66 |

Tekla structures

FRONT VIEW

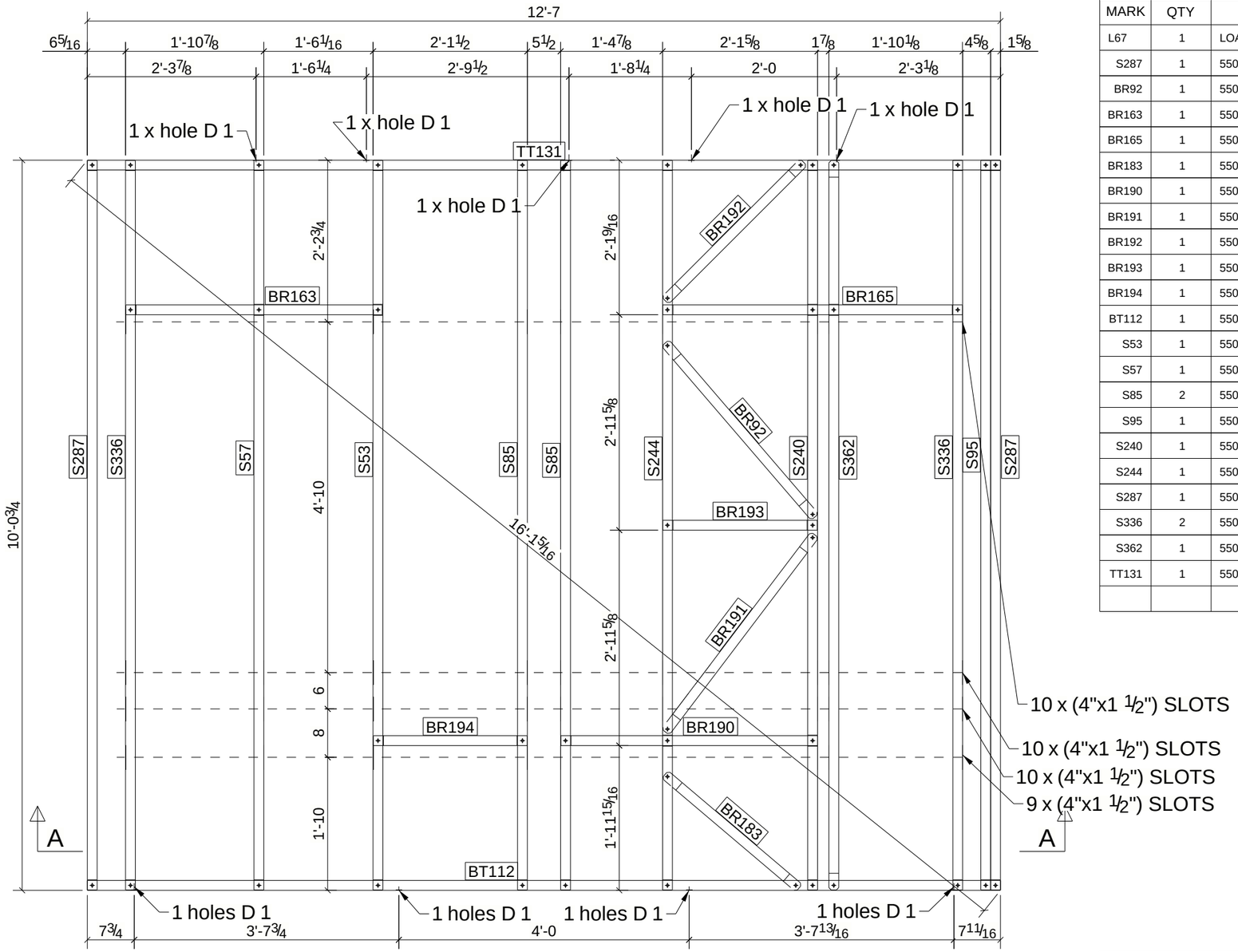


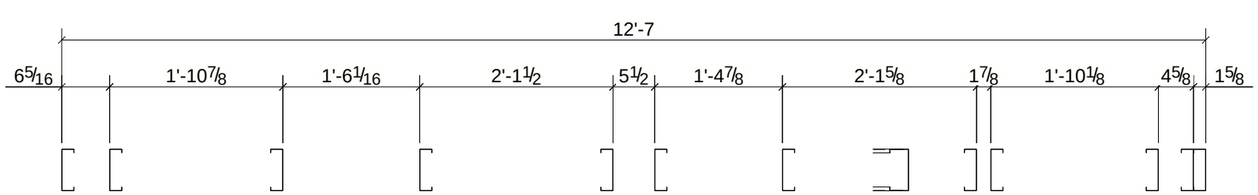


A - A

# BILL OF MATERIAL

| MARK | QTY | DESCRIPTION | LENGTH | WEIGHT | REMARKS |
|---|---|---|---|---|---|
| L67 | 1 | LOAD BEARNING WALL | | | SQ-2 |
| S287 | 1 | 550S162-43 | 10'-0 11/16" | 14.51 | A913-GR.50 |
| BR92 | 1 | 550S162-43 | 3'-1 15/16" | 4.56 | A913-GR.50 |
| BR163 | 1 | 550S162-43 | 3'-6 3/8" | 5.10 | A913-GR.50 |
| BR165 | 1 | 550S162-43 | 4'-1 9/16" | 5.96 | A913-GR.50 |
| BR183 | 1 | 550S162-43 | 2'-5 1/16" | 3.49 | A913-GR.50 |
| BR190 | 1 | 550S162-43 | 3'-6 7/16" | 5.10 | A913-GR.50 |
| BR191 | 1 | 550S162-43 | 3'-4 7/8" | 4.92 | A913-GR.50 |
| BR192 | 1 | 550S162-43 | 2'-8 3/8" | 3.89 | A913-GR.50 |
| BR193 | 1 | 550S162-43 | 2'-1 9/16" | 3.07 | A913-GR.50 |
| BR194 | 1 | 550S162-43 | 2'-1 7/16" | 3.06 | A913-GR.50 |
| BT112 | 1 | 550S162-43 | 12'-7" | 18.16 | A913-GR.50 |
| S53 | 1 | 550S162-43 | 10'-0 11/16" | 14.51 | A913-GR.50 |
| S57 | 1 | 550S162-43 | 10'-0 11/16" | 14.51 | A913-GR.50 |
| S85 | 2 | 550S162-43 | 10'-0 11/16" | 29.02 | A913-GR.50 |
| S95 | 1 | 550S162-43 | 10'-0 11/16" | 14.51 | A913-GR.50 |
| S240 | 1 | 550S162-43 | 10'-0 11/16" | 14.51 | A913-GR.50 |
| S244 | 1 | 550S162-43 | 10'-0 11/16" | 14.51 | A913-GR.50 |
| S287 | 1 | 550S162-43 | 10'-0 11/16" | 14.51 | A913-GR.50 |
| S336 | 2 | 550S162-43 | 10'-0 11/16" | 29.02 | A913-GR.50 |
| S362 | 1 | 550S162-43 | 10'-0 11/16" | 14.51 | A913-GR.50 |
| TT131 | 1 | 550S162-43 | 12'-7" | 18.16 | A913-GR.50 |
| | | TOTAL WEIGHT THIS DRAWING | | 250 | |

| REV | DESCRIPTION | DATE |
|---|---|---|
| | | |

| | | | |
|---|---|---|---|
| DESCRIPTION | | | |
| PROJECT NAME | | | |
| DRAWN BY | | JOB No. | DRG No. |
| DATE DRAWN | 07/19/2024 | | L67 |

Tekla structures

FRONT VIEW

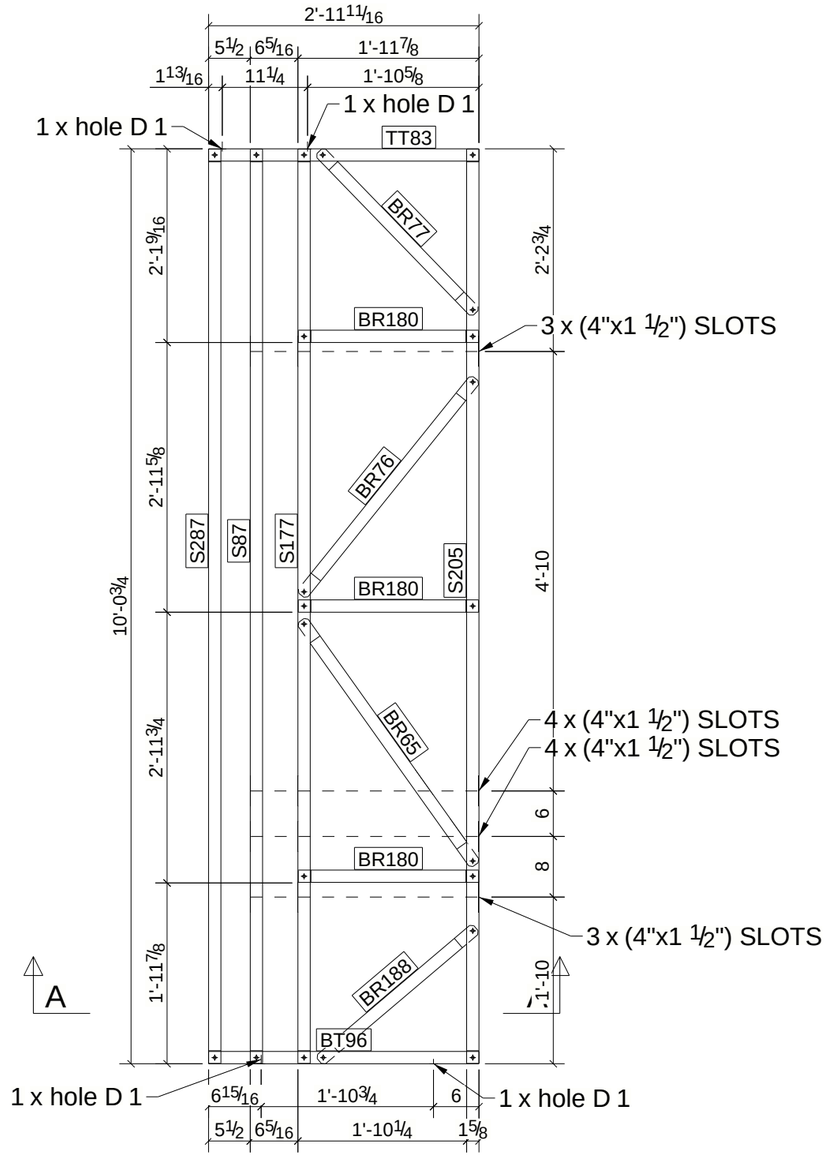


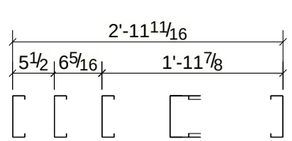


A - A

# BILL OF MATERIAL

| MARK | QTY | DESCRIPTION | LENGTH | WEIGHT | REMARKS |
|---|---|---|---|---|---|
| L68 | 1 | LOAD BEARNING WALL | | | SQ-2 |
| S87 | 1 | 550S162-43 | 10'-0 11/16" | 14.51 | A913-GR.50 |
| BR65 | 1 | 550S162-43 | 3'-3 9/16" | 4.76 | A913-GR.50 |
| BR76 | 1 | 550S162-43 | 3'-0 11/16" | 4.41 | A913-GR.50 |
| BR77 | 1 | 550S162-43 | 2'-5 11/16" | 3.57 | A913-GR.50 |
| BR180 | 3 | 550S162-43 | 1'-11 13/16" | 8.59 | A913-GR.50 |
| BR188 | 1 | 550S162-43 | 2'-3 1/8" | 3.26 | A913-GR.50 |
| BT96 | 1 | 550S162-43 | 2'-11 11/16" | 4.29 | A913-GR.50 |
| S177 | 1 | 550S162-43 | 10'-0 11/16" | 14.51 | A913-GR.50 |
| S205 | 1 | 550S162-43 | 10'-0 11/16" | 14.51 | A913-GR.50 |
| S287 | 1 | 550S162-43 | 10'-0 11/16" | 14.51 | A913-GR.50 |
| TT83 | 1 | 550S162-43 | 2'-11 11/16" | 4.29 | A913-GR.50 |
| | | TOTAL WEIGHT THIS DRAWING | | 91 | |

| REV | DESCRIPTION | DATE |
|---|---|---|
| | | |

| | | | |
|---|---|---|---|
| DESCRIPTION | | | |
| PROJECT NAME | | | |
| DRAWN BY | | JOB No. | DRG No. |
| DATE DRAWN | 07/19/2024 | | L68 |

Tekla structures

# BILL OF MATERIAL

| MARK | QTY | DESCRIPTION | LENGTH | WEIGHT | REMARKS |
|---|---|---|---|---|---|
| L69 | 1 | LOAD BEARNING WALL | | | SQ-2 |
| S2 | 1 | 550S162-43 | 10'-0 11/16" | 14.51 | A913-GR.50 |
| BT52 | 1 | 550S162-43 | 0'-10" | 1.20 | A913-GR.50 |
| S2 | 2 | 550S162-43 | 10'-0 11/16" | 29.02 | A913-GR.50 |
| TT52 | 1 | 550S162-43 | 0'-10" | 1.20 | A913-GR.50 |
| | | TOTAL WEIGHT THIS DRAWING | | 46 | |

FRONT VIEW

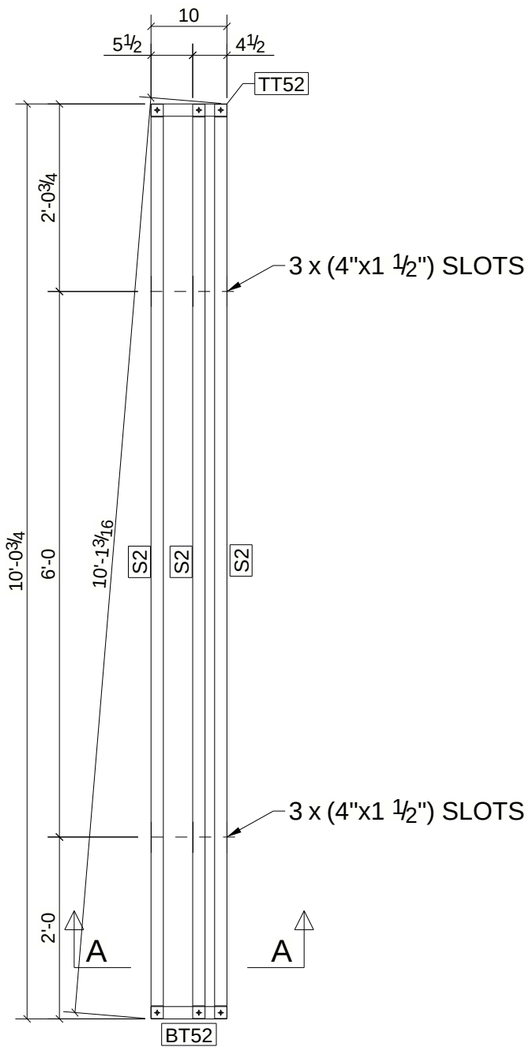


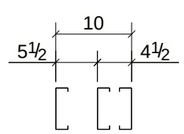


A - A

Tekla structures

| REV | DESCRIPTION | DATE |
|---|---|---|
| | | |

| | | | |
|---|---|---|---|
| DESCRIPTION | | | |
| PROJECT NAME | | | |
| DRAWN BY | VN | JOB No. | DRG No. |
| DATE DRAWN | 07/10/2024 | | L69 |

FRONT VIEW

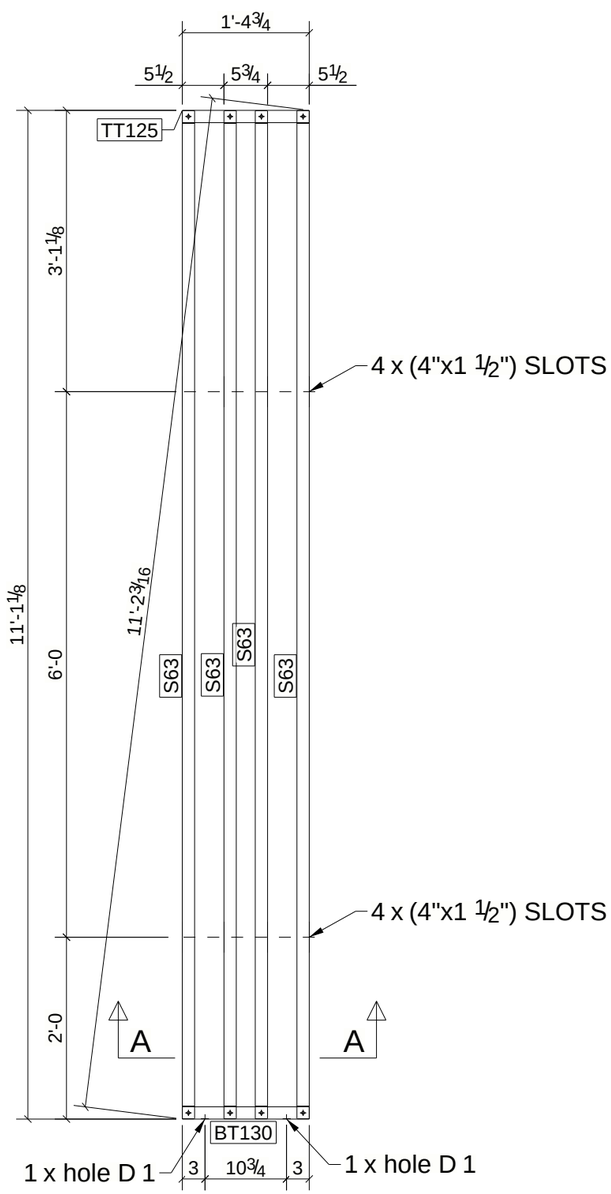


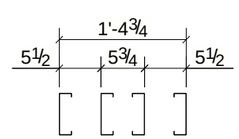


A - A

# BILL OF MATERIAL

| MARK | QTY | DESCRIPTION | LENGTH | WEIGHT | REMARKS |
|---|---|---|---|---|---|
| L70 | 1 | LOAD BEARNING WALL | | | SQ-2 |
| S63 | 1 | 550S162-43 | 11'-1 1/16" | 16.00 | A913-GR.50 |
| BT130 | 1 | 550S162-43 | 1'-4 3/4" | 2.01 | A913-GR.50 |
| S63 | 3 | 550S162-43 | 11'-1 1/16" | 47.99 | A913-GR.50 |
| TT125 | 1 | 550S162-43 | 1'-4 3/4" | 2.01 | A913-GR.50 |
| | | TOTAL WEIGHT THIS DRAWING | | 68 | |

| REV | DESCRIPTION | DATE |
|---|---|---|
| | | |

| | | | |
|---|---|---|---|
| DESCRIPTION | | | |
| PROJECT NAME | | | |
| DRAWN BY | VN | JOB No. | DRG No. |
| DATE DRAWN | 07/19/2024 | | L70 |

Tekla structures

# BILL OF MATERIAL

| MARK | QTY | DESCRIPTION | LENGTH | WEIGHT | REMARKS |
|---|---|---|---|---|---|
| L71 | 1 | LOAD BEARNING WALL | | | SQ-2 |
| S365 | 1 | 550S162-43 | 10'-0 11/16" | 14.51 | A653-GR.50 |
| BT46 | 1 | 550S162-43 | 2'-5 9/16" | 3.55 | A653-GR.50 |
| S366 | 3 | 550S162-43 | 10'-0 11/16" | 43.53 | A653-GR.50 |
| TT48 | 1 | 550S162-43 | 2'-5 9/16" | 3.55 | A653-GR.50 |
| | | TOTAL WEIGHT THIS DRAWING | | 65 | |

FRONT VIEW

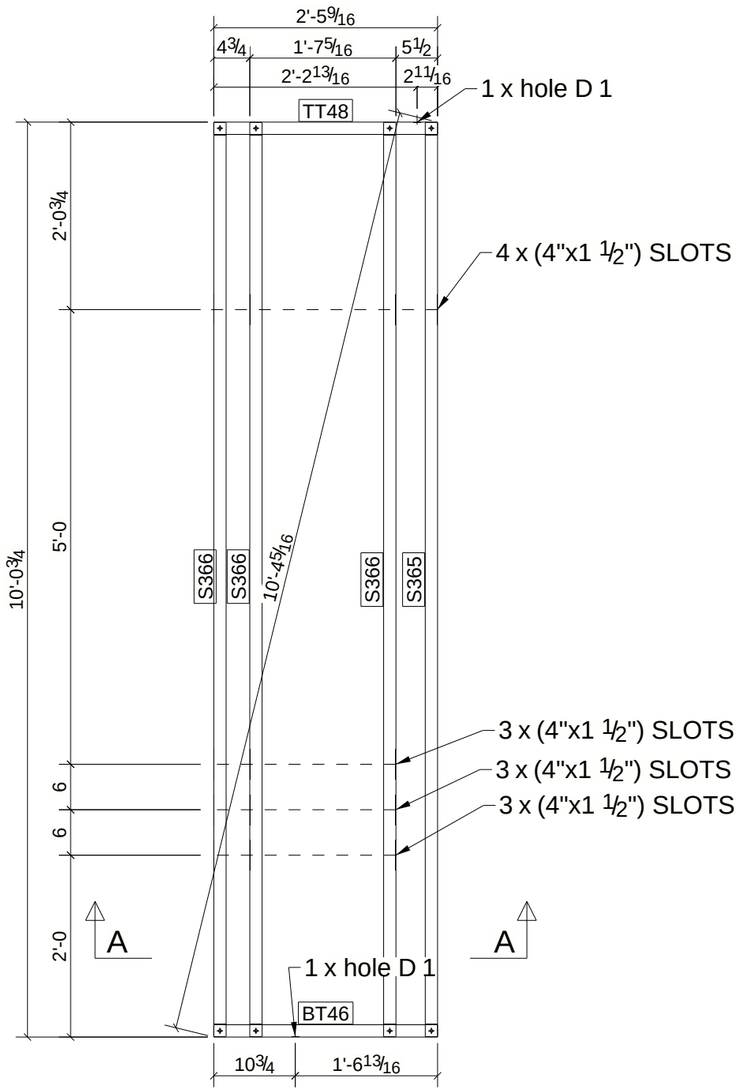


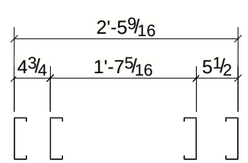


A - A

Tekla structures

| REV | DESCRIPTION | DATE |
|---|---|---|
| | | |

| | | | |
|---|---|---|---|
| DESCRIPTION | | | |
| PROJECT NAME | | | |
| DRAWN BY | | JOB No. | DRG No. |
| DATE DRAWN | 08/14/2024 | | L71 |

FRONT VIEW

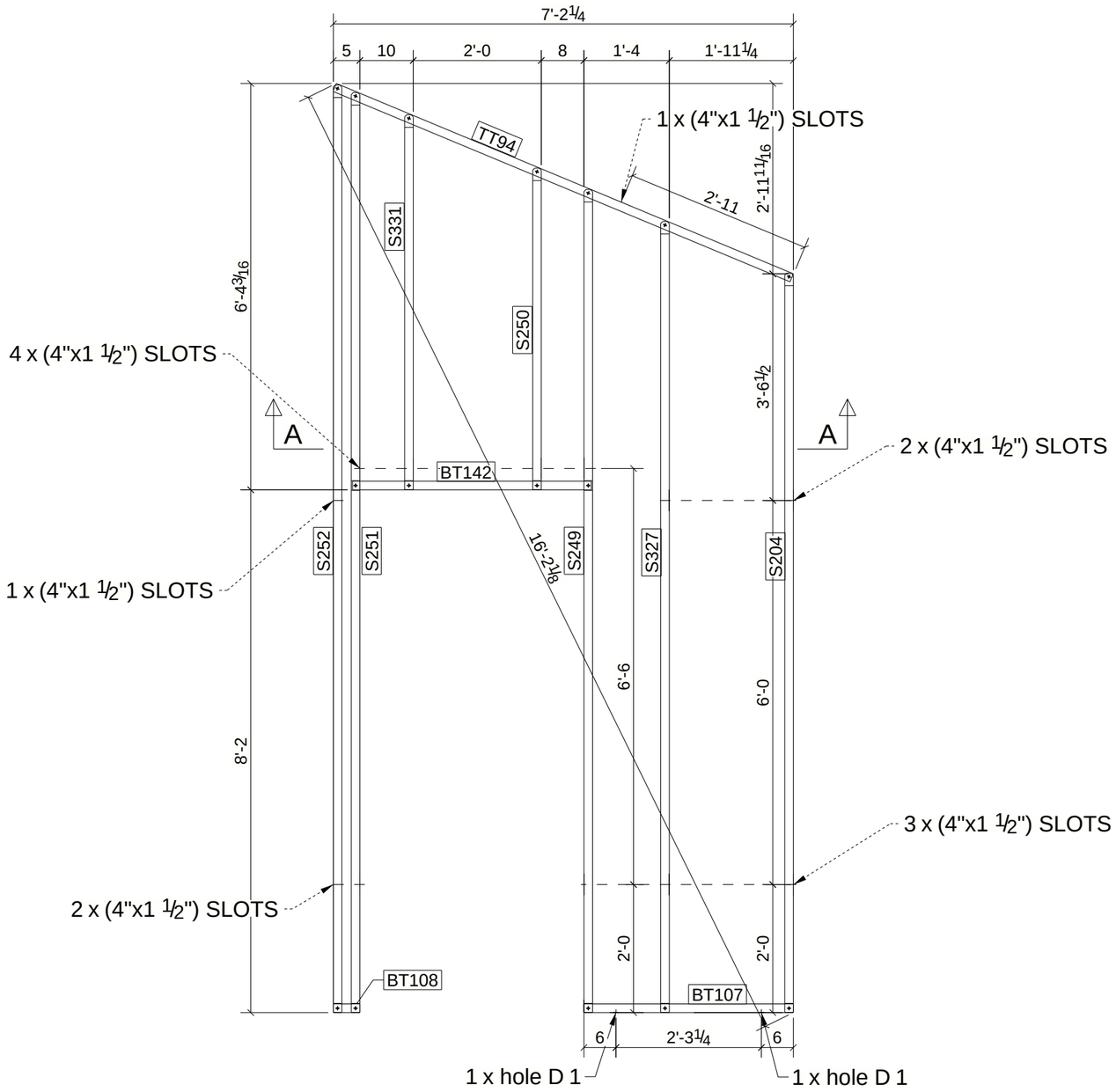


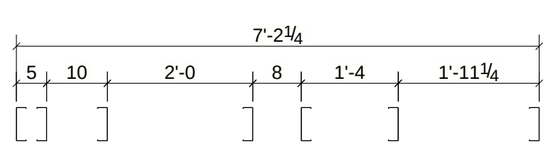


A - A

# BILL OF MATERIAL

| MARK | QTY | DESCRIPTION | LENGTH | WEIGHT | REMARKS |
|---|---|---|---|---|---|
| N1 | 1 | NON-LOAD BEARING WALL | | | SQ-2 |
| S252 | 1 | 550S162-27 | 14'-5 7/8" | 12.33 | A653-GR.50 |
| BT107 | 1 | 550S162-27 | 3'-3 1/4" | 2.78 | A653-GR.50 |
| BT108 | 1 | 550S162-27 | 0'-5" | 0.35 | A653-GR.50 |
| BT142 | 1 | 550S162-27 | 3'-8 3/4" | 3.17 | A653-GR.50 |
| S204 | 1 | 550S162-27 | 11'-6 5/8" | 9.83 | A653-GR.50 |
| S249 | 1 | 550S162-27 | 12'-10 5/16" | 10.94 | A653-GR.50 |
| S250 | 1 | 550S162-27 | 5'-0 5/16" | 4.27 | A653-GR.50 |
| S251 | 1 | 550S162-27 | 14'-4 7/16" | 12.23 | A653-GR.50 |
| S327 | 1 | 550S162-27 | 12'-4 5/16" | 10.51 | A653-GR.50 |
| S331 | 1 | 550S162-27 | 5'-10 5/16" | 4.98 | A653-GR.50 |
| TT94 | 1 | 550S162-27 | 7'-8 13/16" | 6.58 | A653-GR.50 |
| | | TOTAL WEIGHT THIS DRAWING | | 78 | |

| REV | DESCRIPTION | DATE |
|---|---|---|
| | | |

| | | | |
|---|---|---|---|
| DESCRIPTION | | | |
| PROJECT NAME | | | |
| DRAWN BY | VN | JOB No. | DRG No. |
| DATE DRAWN | 07/19/2024 | | N1 |

Tekla structures

# BILL OF MATERIAL

| MARK | QTY | DESCRIPTION | LENGTH | WEIGHT | REMARKS |
|---|---|---|---|---|---|
| N2 | 1 | NON-LOAD BEARING WALL | | | SQ-2 |
| S283 | 1 | 550S162-27 | 9'-0 9/16" | 7.70 | A653-GR.50 |
| BT122 | 1 | 550S162-27 | 3'-4 3/8" | 2.86 | A653-GR.50 |
| S283 | 3 | 550S162-27 | 9'-0 9/16" | 23.09 | A653-GR.50 |
| TT106 | 1 | 550S162-27 | 3'-4 3/8" | 2.86 | A653-GR.50 |
| | | TOTAL WEIGHT THIS DRAWING | | 37 | |

FRONT VIEW

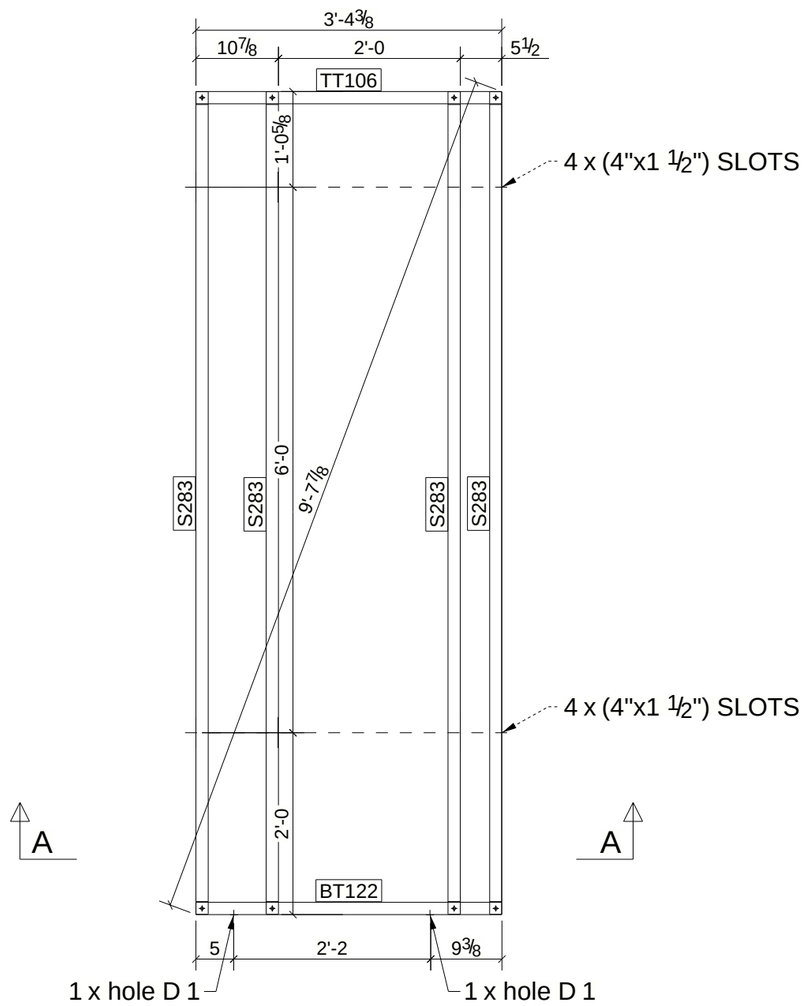


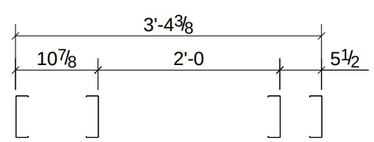


A - A

| REV | DESCRIPTION | DATE |
|---|---|---|
| | | |

| | | | |
|---|---|---|---|
| DESCRIPTION | | | |
| PROJECT NAME | | | |
| DRAWN BY | VN | JOB No. | DRG No. |
| DATE DRAWN | 07/19/2024 | | N2 |

Tekla structures

FRONT VIEW

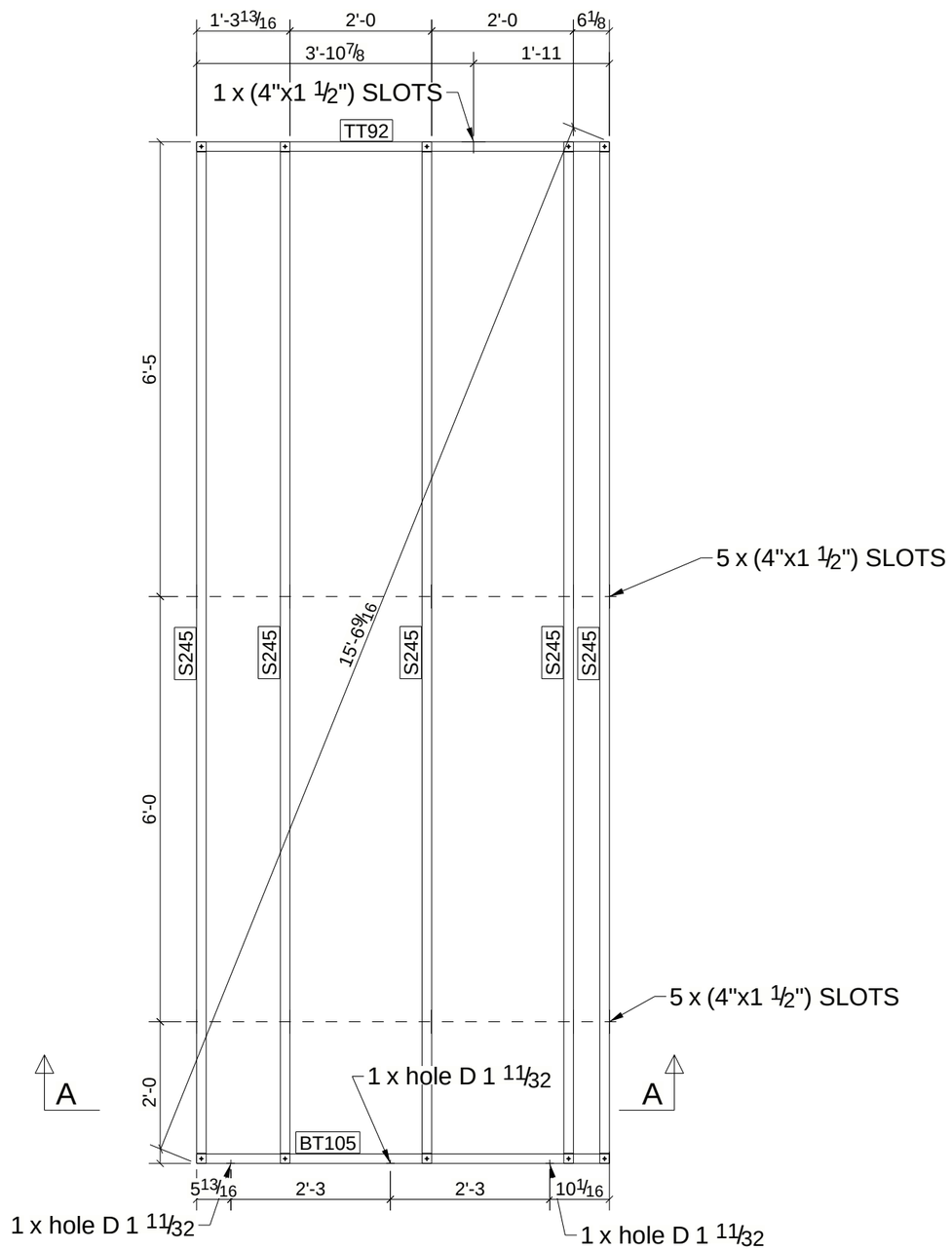


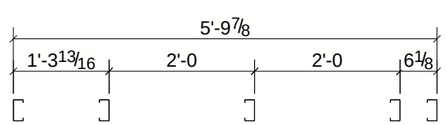


A - A

# BILL OF MATERIAL

| MARK | QTY | DESCRIPTION | LENGTH | WEIGHT | REMARKS |
|---|---|---|---|---|---|
| N3 | 1 | NON-LOAD BEARING WALL | | | SQ-2 |
| S245 | 1 | 350S162-33 | 14'-4 15/16" | 12.65 | A653-GR.50 |
| BT105 | 1 | 350S162-33 | 5'-9 7/8" | 5.11 | A653-GR.50 |
| S245 | 4 | 350S162-33 | 14'-4 15/16" | 50.61 | A653-GR.50 |
| TT92 | 1 | 350S162-33 | 5'-9 7/8" | 5.11 | A653-GR.50 |
| | | TOTAL WEIGHT THIS DRAWING | | 73 | |

| REV | DESCRIPTION | DATE |
|---|---|---|
| | | |

| | | | |
|---|---|---|---|
| DESCRIPTION | | | |
| PROJECT NAME | | | |
| DRAWN BY | VN | JOB No. | DRG No. |
| DATE DRAWN | 07/19/2024 | | N3 |

Tekla structures

FRONT VIEW

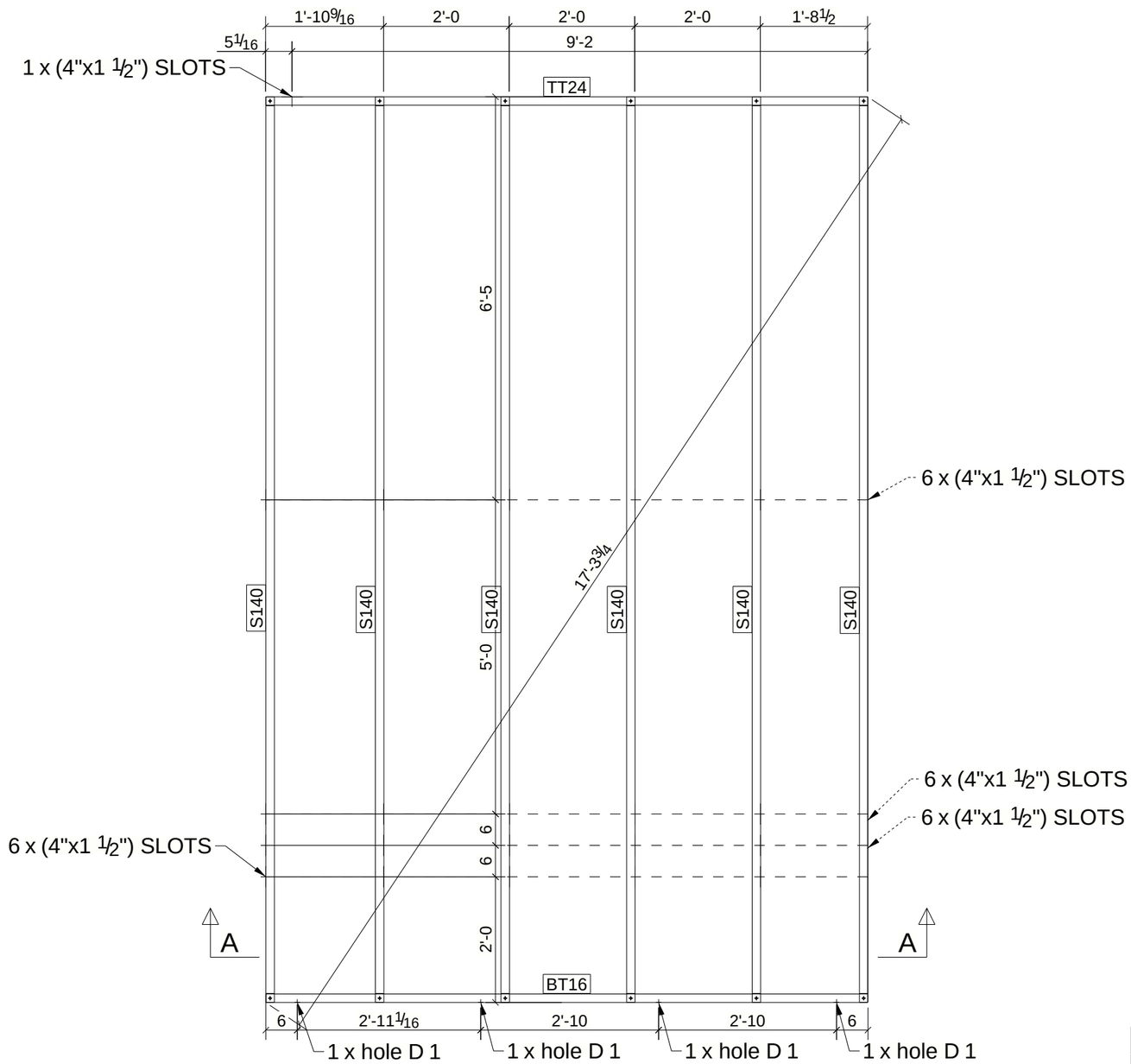


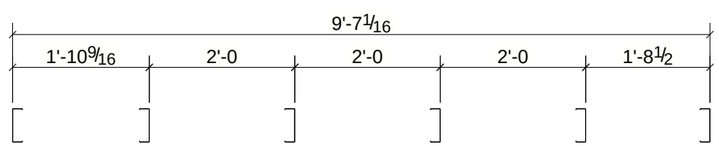


A - A

# BILL OF MATERIAL

| MARK | QTY | DESCRIPTION | LENGTH | WEIGHT | REMARKS |
|---|---|---|---|---|---|
| N4 | 1 | NON-LOAD BEARING WALL | | | SQ-2 |
| S140 | 1 | 550S162-27 | 14'-4 15/16" | 12.26 | A653-GR.50 |
| BT16 | 1 | 550S162-27 | 9'-7 1/16" | 8.16 | A653-GR.50 |
| S140 | 5 | 550S162-27 | 14'-4 15/16" | 61.31 | A653-GR.50 |
| TT24 | 1 | 550S162-27 | 9'-7 1/16" | 8.16 | A653-GR.50 |
| | | TOTAL WEIGHT THIS DRAWING | | 90 | |

| REV | DESCRIPTION | DATE |
|---|---|---|
| | | |

| | | | |
|---|---|---|---|
| DESCRIPTION | | | |
| PROJECT NAME | | | |
| DRAWN BY | VN | JOB No. | DRG No. |
| DATE DRAWN | 07/19/2024 | | N4 |

Tekla structures

FRONT VIEW

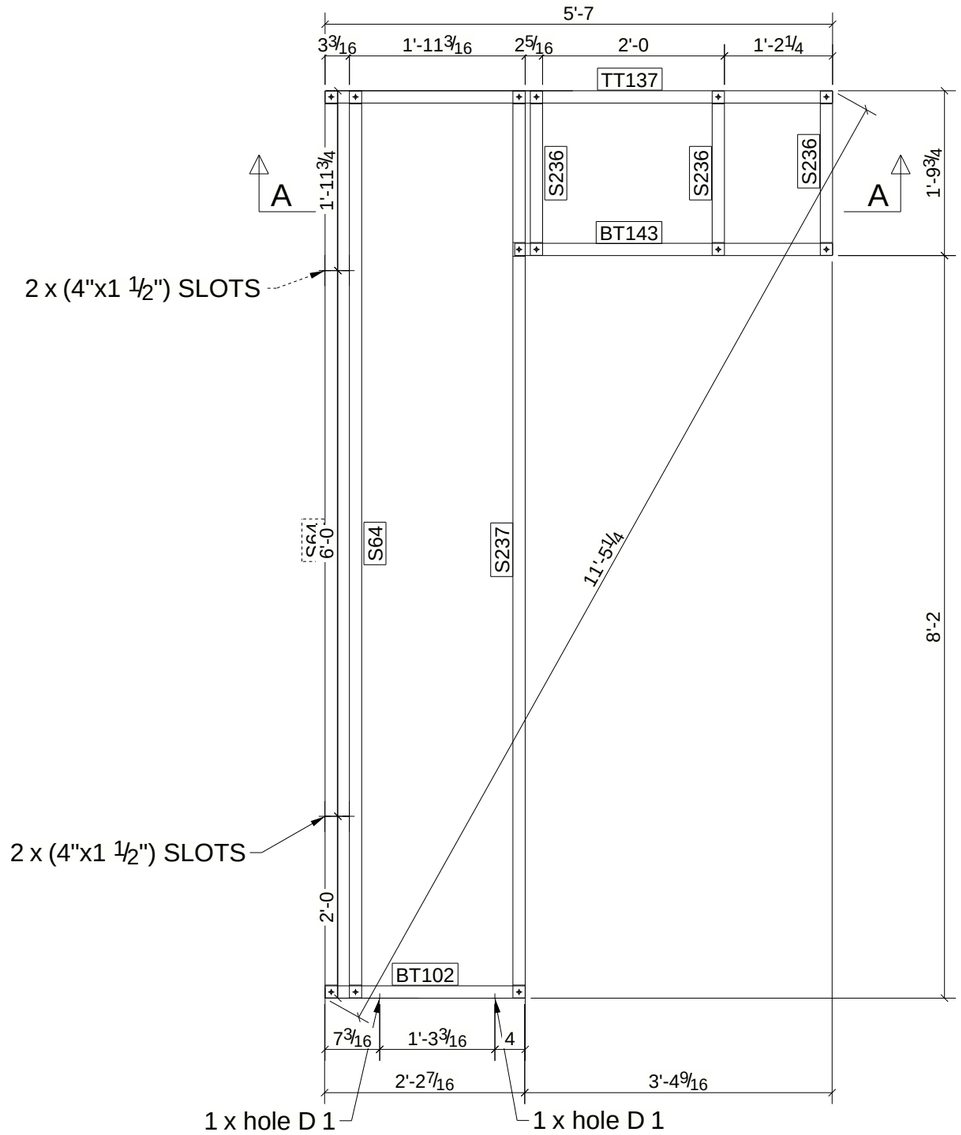


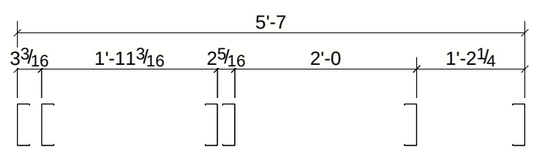


A - A

# BILL OF MATERIAL

| MARK | QTY | DESCRIPTION | LENGTH | WEIGHT | REMARKS |
|---|---|---|---|---|---|
| N5 | 1 | NON-LOAD BEARING WALL | | | SQ-2 |
| S237 | 1 | 550S162-27 | 9'-11 11/16" | 8.49 | A653-GR.50 |
| BT102 | 1 | 550S162-27 | 2'-2 7/16" | 1.87 | A653-GR.50 |
| BT143 | 1 | 550S162-27 | 3'-5 15/16" | 2.97 | A653-GR.50 |
| S64 | 2 | 550S162-27 | 9'-11 11/16" | 16.97 | A653-GR.50 |
| S236 | 3 | 550S162-27 | 1'-9 11/16" | 4.61 | A653-GR.50 |
| TT137 | 1 | 550S162-27 | 5'-7" | 4.75 | A653-GR.50 |
| | | TOTAL WEIGHT THIS DRAWING | | 40 | |

| REV | DESCRIPTION | DATE |
|---|---|---|
| | | |

| | | | |
|---|---|---|---|
| DESCRIPTION | | | |
| PROJECT NAME | | | |
| DRAWN BY | VN | JOB No. | DRG No. |
| DATE DRAWN | 07/19/2024 | | N5 |

Tekla structures

FRONT VIEW

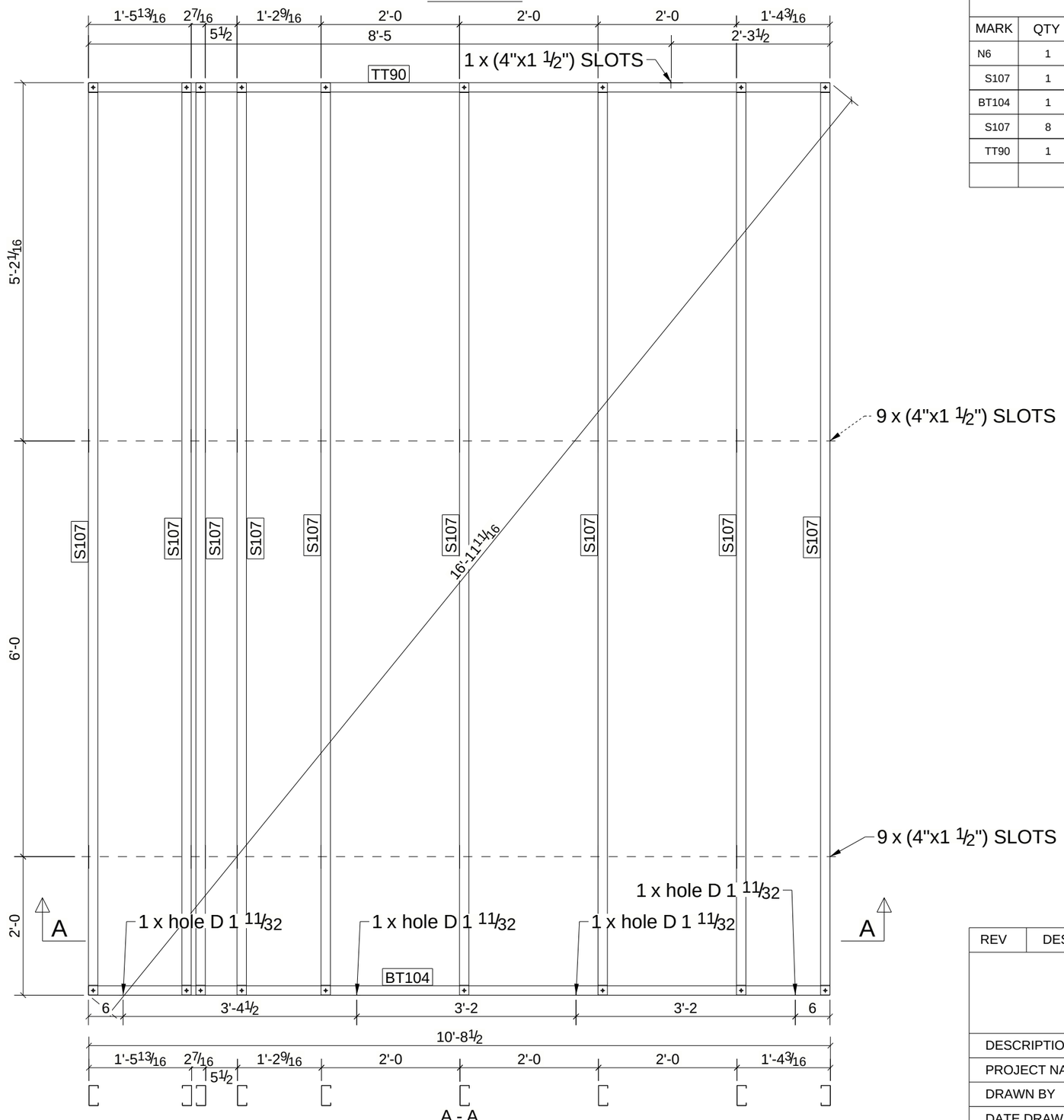


A - A

# BILL OF MATERIAL

| MARK | QTY | DESCRIPTION | LENGTH | WEIGHT | REMARKS |
|---|---|---|---|---|---|
| N6 | 1 | NON-LOAD BEARING WALL | | | SQ-2 |
| S107 | 1 | 350S162-33 | 13'-2" | 11.56 | A653-GR.50 |
| BT104 | 1 | 350S162-33 | 10'-8 1/2" | 9.40 | A653-GR.50 |
| S107 | 8 | 350S162-33 | 13'-2" | 92.48 | A653-GR.50 |
| TT90 | 1 | 350S162-33 | 10'-8 1/2" | 9.40 | A653-GR.50 |
| | | TOTAL WEIGHT THIS DRAWING | | 123 | |

| REV | DESCRIPTION | DATE |
|---|---|---|
| | | |

| | | | |
|---|---|---|---|
| DESCRIPTION | | | |
| PROJECT NAME | | | |
| DRAWN BY | VN | JOB No. | DRG No. |
| DATE DRAWN | 07/19/2024 | | N6 |

Tekla structures

FRONT VIEW

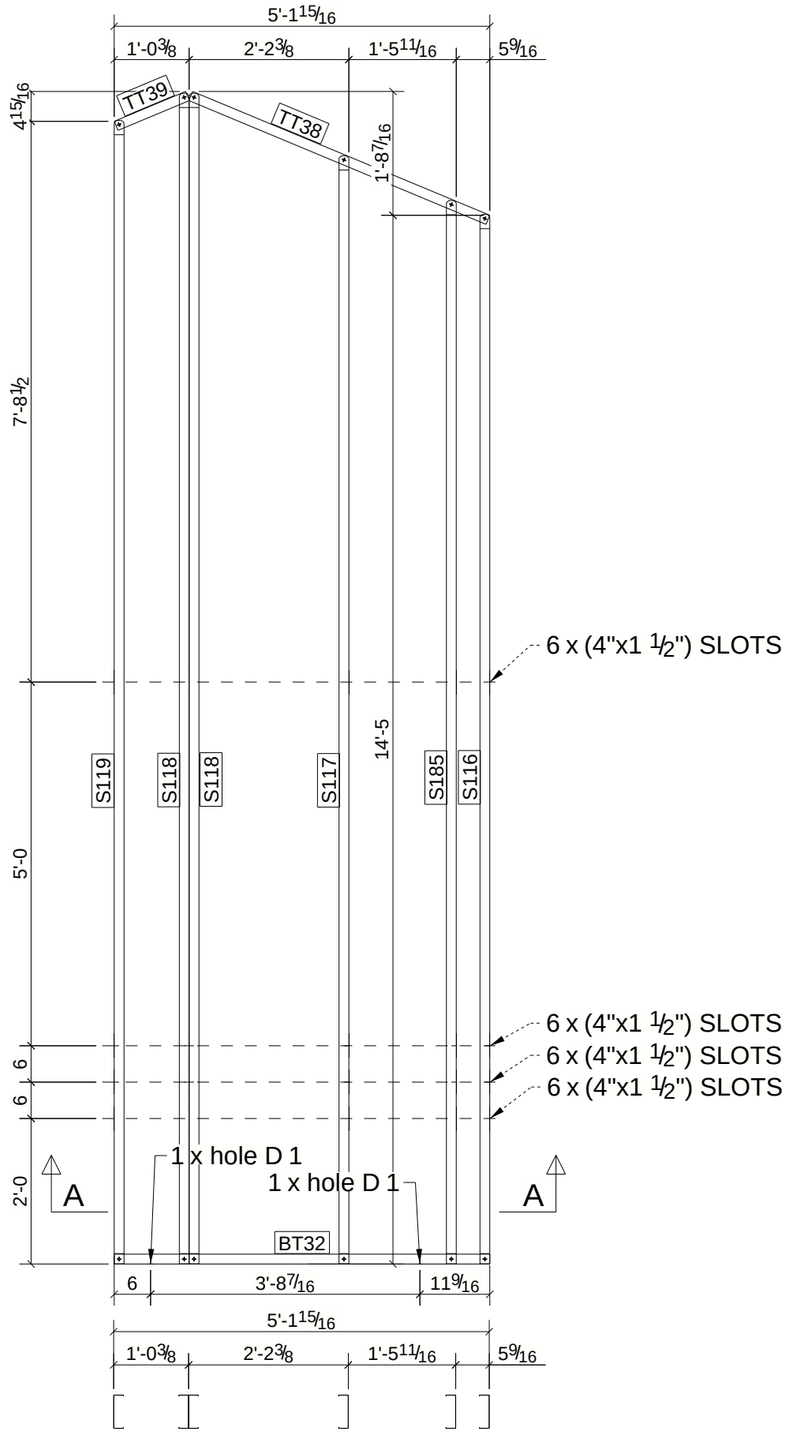


A - A

# BILL OF MATERIAL

| MARK | QTY | DESCRIPTION | LENGTH | WEIGHT | REMARKS |
|---|---|---|---|---|---|
| N7 | 1 | NON-LOAD BEARING WALL | | | SQ-2 |
| S118 | 1 | 550S162-27 | 16'-1 1/8" | 13.69 | A653-GR.50 |
| BT32 | 1 | 550S162-27 | 5'-1 15/16" | 4.39 | A653-GR.50 |
| S116 | 1 | 550S162-27 | 14'-5 1/8" | 12.27 | A653-GR.50 |
| S117 | 1 | 550S162-27 | 15'-2 13/16" | 12.96 | A653-GR.50 |
| S118 | 1 | 550S162-27 | 16'-1 1/8" | 13.69 | A653-GR.50 |
| S119 | 1 | 550S162-27 | 15'-8 5/8" | 13.37 | A653-GR.50 |
| S185 | 1 | 550S162-27 | 14'-7 7/16" | 12.44 | A653-GR.50 |
| TT38 | 1 | 550S162-27 | 4'-5 1/8" | 3.77 | A653-GR.50 |
| TT39 | 1 | 550S162-27 | 1'-0 3/4" | 0.91 | A653-GR.50 |
| | | TOTAL WEIGHT THIS DRAWING | | 87 | |

| REV | DESCRIPTION | DATE |
|---|---|---|
| | | |

| | | | |
|---|---|---|---|
| DESCRIPTION | | | |
| PROJECT NAME | | | |
| DRAWN BY | VN | JOB No. | DRG No. |
| DATE DRAWN | 07/19/2024 | | N7 |

Tekla structures

FRONT VIEW

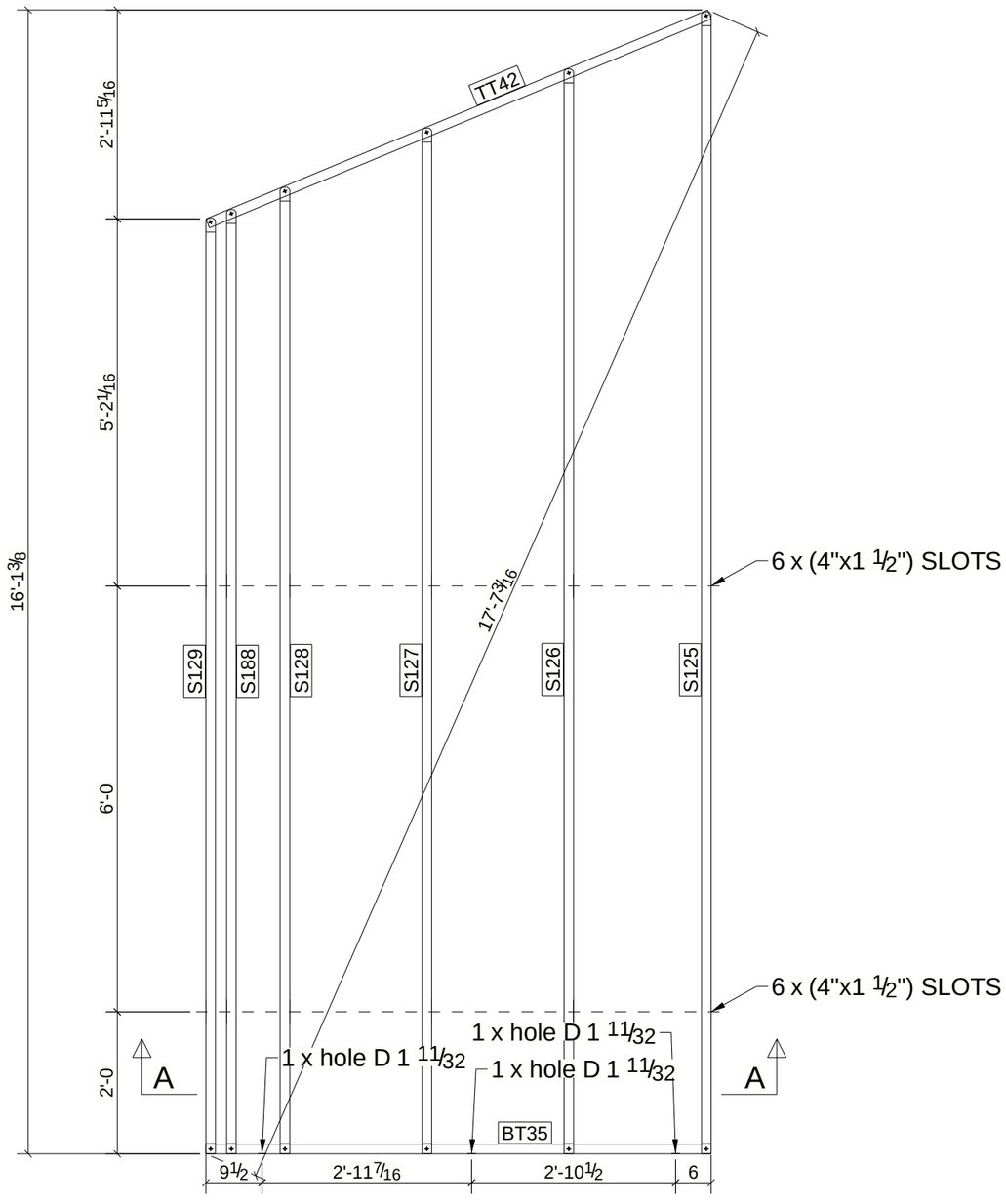


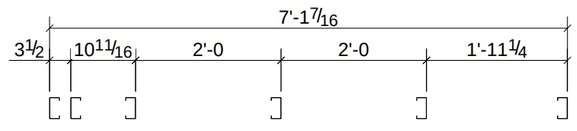


A - A

# BILL OF MATERIAL

| MARK | QTY | DESCRIPTION | LENGTH | WEIGHT | REMARKS |
|---|---|---|---|---|---|
| N8 | 1 | NON-LOAD BEARING WALL | | | SQ-2 |
| S125 | 1 | 350S162-33 | 16'-1 1/16" | 14.12 | A653-GR.50 |
| BT35 | 1 | 350S162-33 | 7'-1 7/16" | 6.25 | A653-GR.50 |
| S126 | 1 | 350S162-33 | 15'-3 3/8" | 13.42 | A653-GR.50 |
| S127 | 1 | 350S162-33 | 14'-5 3/8" | 12.69 | A653-GR.50 |
| S128 | 1 | 350S162-33 | 13'-7 3/8" | 11.95 | A653-GR.50 |
| S129 | 1 | 350S162-33 | 13'-2 3/16" | 11.57 | A653-GR.50 |
| S188 | 1 | 350S162-33 | 13'-3 5/8" | 11.68 | A653-GR.50 |
| TT42 | 1 | 350S162-33 | 7'-7 15/16" | 6.73 | A653-GR.50 |
| | | TOTAL WEIGHT THIS DRAWING | | 88 | |

| REV | DESCRIPTION | DATE |
|---|---|---|
| | | |

| | | | |
|---|---|---|---|
| DESCRIPTION | | | |
| PROJECT NAME | | | |
| DRAWN BY | VN | JOB No. | DRG No. |
| DATE DRAWN | 07/19/2024 | | N8 |

Tekla structures

# BILL OF MATERIAL

| MARK | QTY | DESCRIPTION | LENGTH | WEIGHT | REMARKS |
|---|---|---|---|---|---|
| N9 | 1 | NON-LOAD BEARING WALL | | | SQ-2 |
| S52 | 1 | 350S162-33 | 9'-11 15/16" | 8.78 | A653-GR.50 |
| BT34 | 1 | 350S162-33 | 4'-5 1/8" | 3.89 | A653-GR.50 |
| S52 | 3 | 350S162-33 | 9'-11 15/16" | 26.33 | A653-GR.50 |
| TT41 | 1 | 350S162-33 | 4'-5 1/8" | 3.89 | A653-GR.50 |
| | | TOTAL WEIGHT THIS DRAWING | | 43 | |

FRONT VIEW

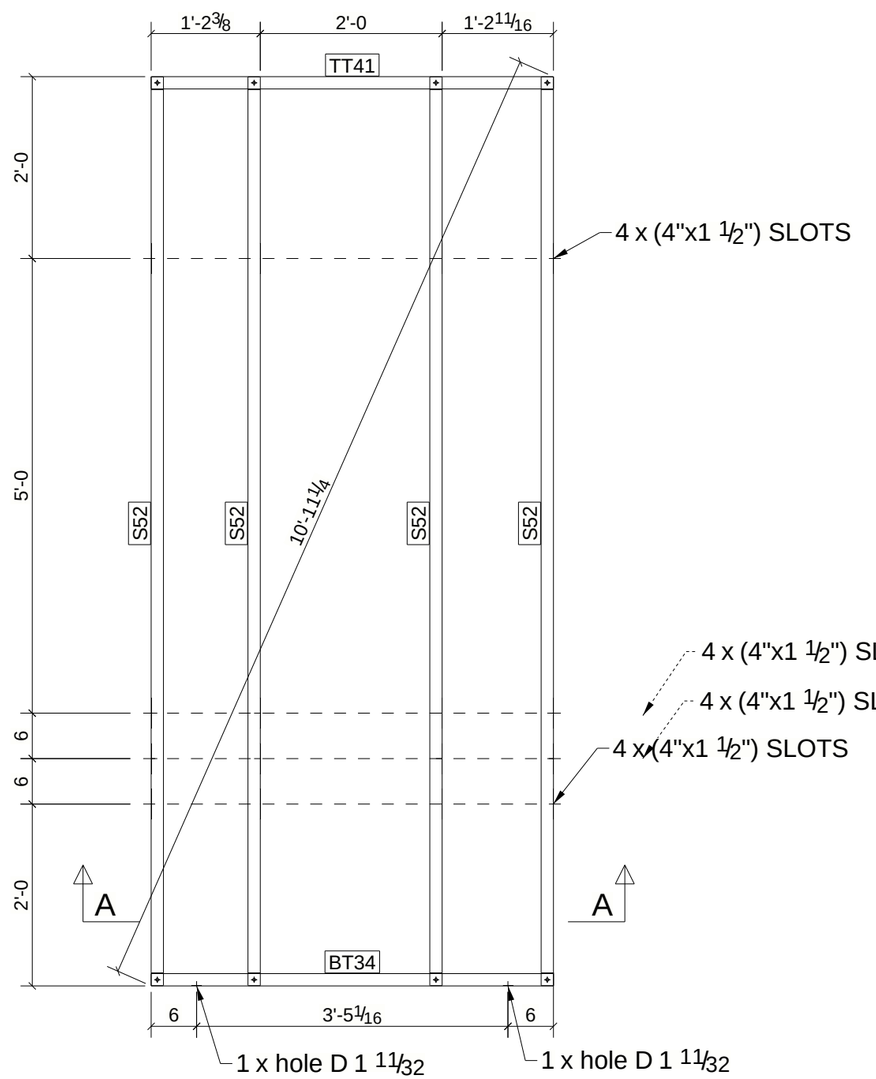


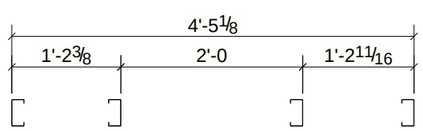


A - A

| REV | DESCRIPTION | DATE |
|---|---|---|
| | | |

| | | | |
|---|---|---|---|
| DESCRIPTION | | | |
| PROJECT NAME | | | |
| DRAWN BY | VN | JOB No. | DRG No. |
| DATE DRAWN | 07/19/2024 | | N9 |

Tekla structures

FRONT VIEW

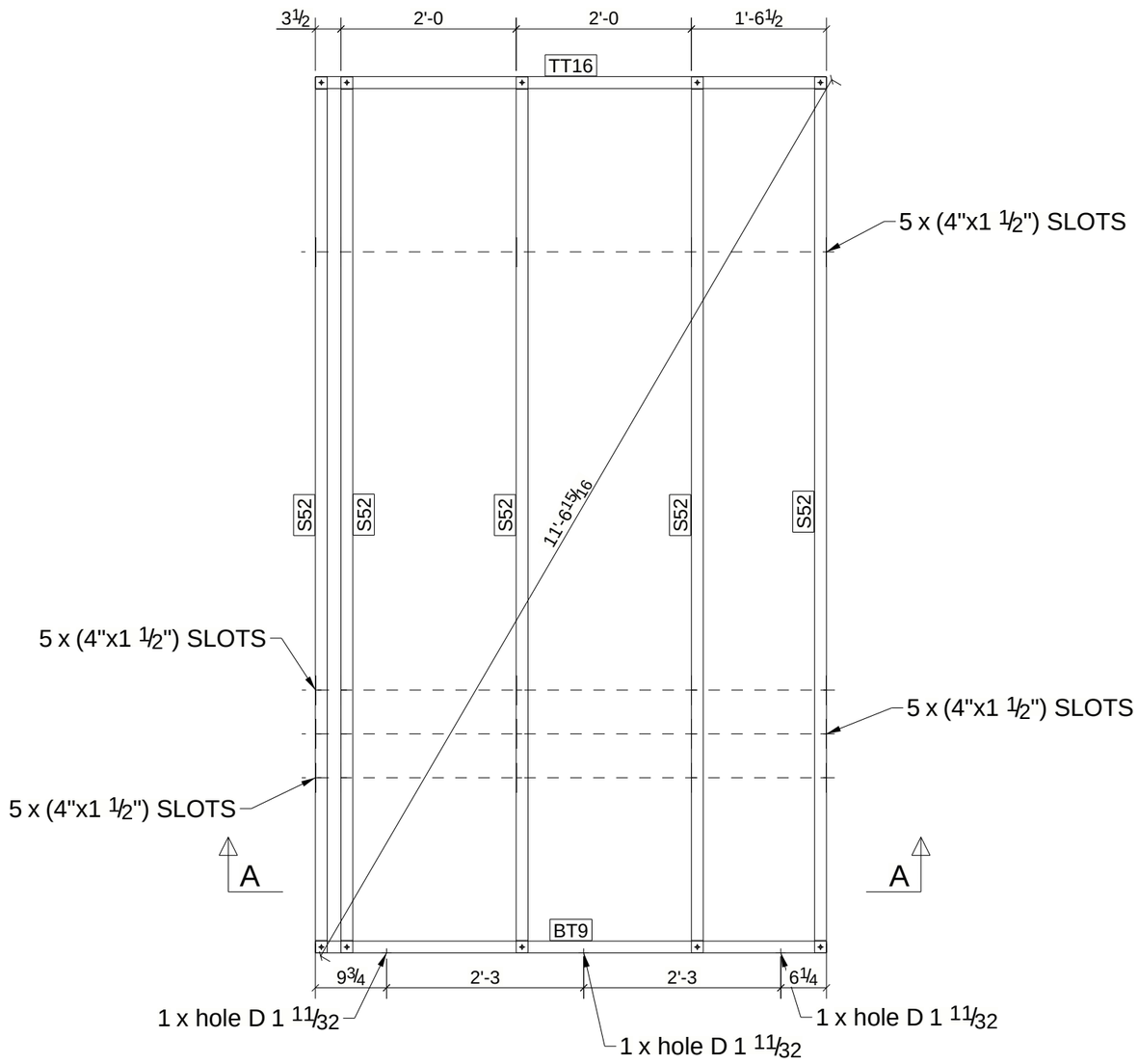


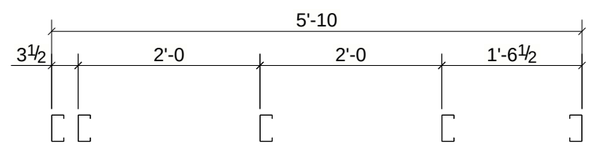


A - A

# BILL OF MATERIAL

| MARK | QTY | DESCRIPTION | LENGTH | WEIGHT | REMARKS |
|---|---|---|---|---|---|
| N10 | 1 | NON-LOAD BEARING WALL | | | SQ-2 |
| S52 | 1 | 350S162-33 | 9'-11 15/16" | 8.78 | A653-GR.50 |
| BT9 | 1 | 350S162-33 | 5'-10" | 5.12 | A653-GR.50 |
| S52 | 4 | 350S162-33 | 9'-11 15/16" | 35.10 | A653-GR.50 |
| TT16 | 1 | 350S162-33 | 5'-10" | 5.12 | A653-GR.50 |
| | | TOTAL WEIGHT THIS DRAWING | | 54 | |

| REV | DESCRIPTION | DATE |
|---|---|---|
| | | |

| | | | |
|---|---|---|---|
| DESCRIPTION | | | |
| PROJECT NAME | | | |
| DRAWN BY | VN | JOB No. | DRG No. |
| DATE DRAWN | 07/19/2024 | | N10 |

Tekla structures

# BILL OF MATERIAL

| MARK | QTY | DESCRIPTION | LENGTH | WEIGHT | REMARKS |
|---|---|---|---|---|---|
| N11 | 1 | NON-LOAD BEARING WALL | | | SQ-2 |
| S1 | 1 | 350S162-43 | 0'-8 9/16" | 0.81 | A653-GR.50 |
| BT146 | 1 | 350S162-43 | 0'-5 3/8" | 0.51 | A653-GR.50 |
| S1 | 1 | 350S162-43 | 0'-8 9/16" | 0.81 | A653-GR.50 |
| TT139 | 1 | 350S162-43 | 0'-5 3/8" | 0.51 | A653-GR.50 |
| | | TOTAL WEIGHT THIS DRAWING | | 3 | |

FRONT VIEW

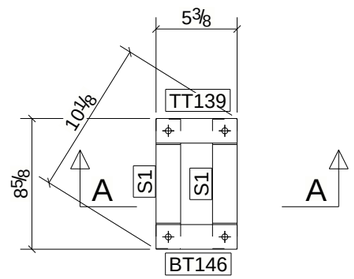


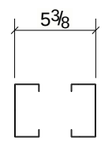


A - A

| REV | DESCRIPTION | DATE |
|---|---|---|
| | | |

| | | | |
|---|---|---|---|
| DESCRIPTION | | | |
| PROJECT NAME | | | |
| DRAWN BY | VN | JOB No. | DRG No. |
| DATE DRAWN | 07/18/2024 | | N11 |

Tekla structures

# BILL OF MATERIAL

| MARK | QTY | DESCRIPTION | LENGTH | WEIGHT | REMARKS |
|---|---|---|---|---|---|
| N12 | 1 | NON-LOAD BEARING WALL | | | SQ-2 |
| S181 | 1 | 350S162-43 | 1'-6 9/16" | 1.76 | A653-GR.50 |
| BT147 | 1 | 350S162-43 | 5'-6 3/4" | 6.32 | A653-GR.50 |
| S181 | 4 | 350S162-43 | 1'-6 9/16" | 7.02 | A653-GR.50 |
| TT77 | 1 | 350S162-43 | 5'-6 3/4" | 6.32 | A653-GR.50 |
| | | TOTAL WEIGHT THIS DRAWING | | 21 | |

FRONT VIEW

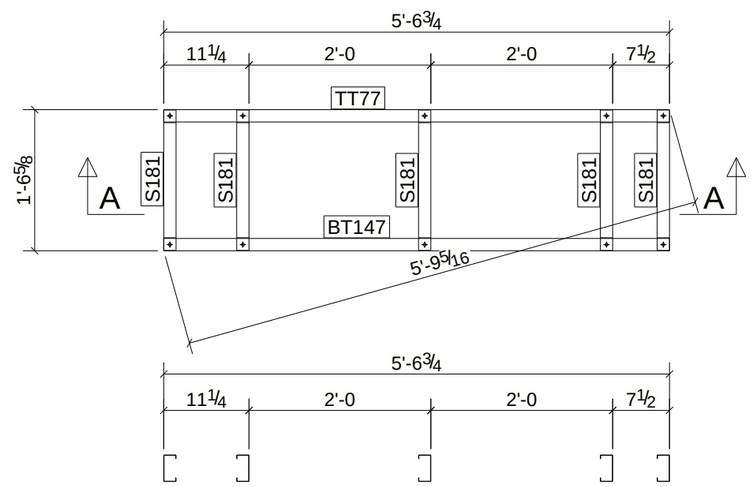


A - A

| REV | DESCRIPTION | DATE |
|---|---|---|
| | | |

| | | | |
|---|---|---|---|
| DESCRIPTION | | | |
| PROJECT NAME | | | |
| DRAWN BY | VN | JOB No. | DRG No. |
| DATE DRAWN | 07/18/2024 | | N12 |

Tekla structures

FRONT VIEW

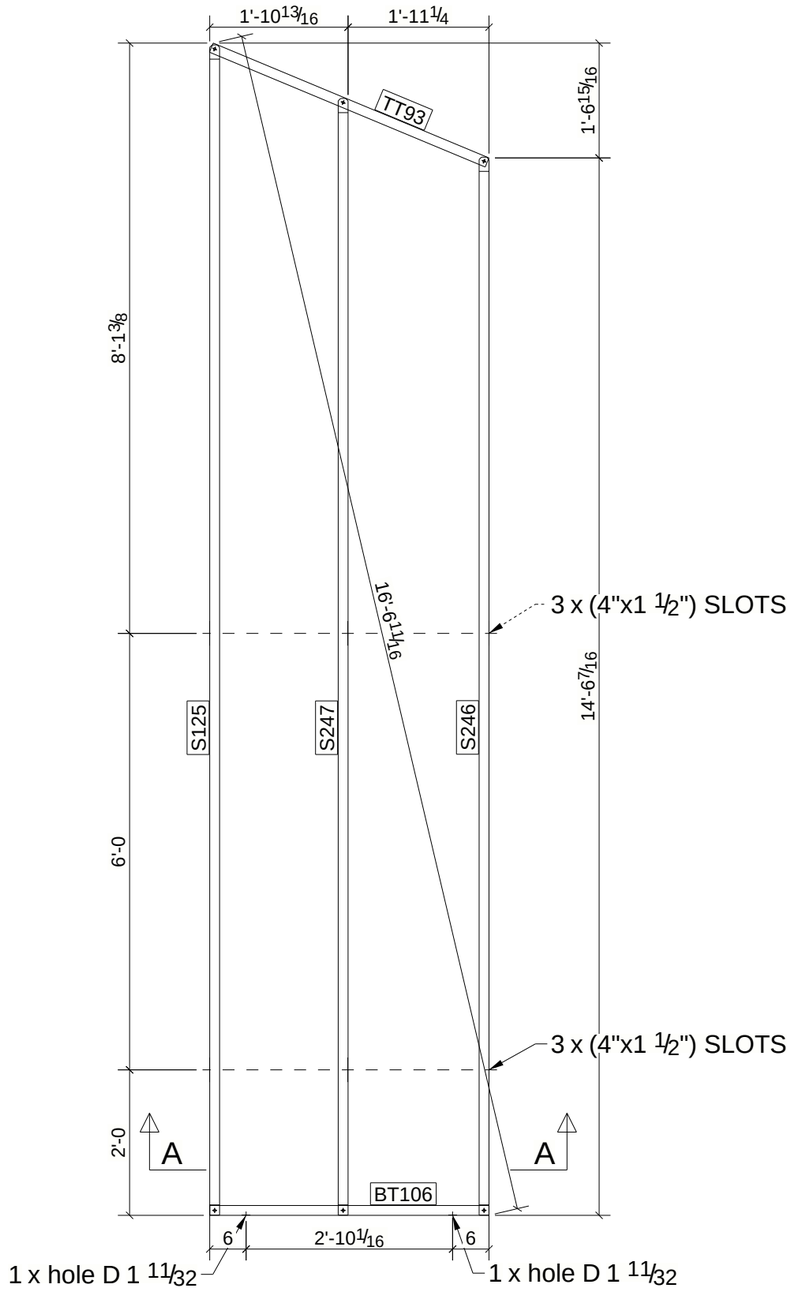


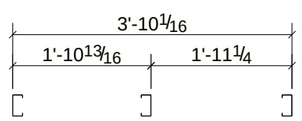


A - A

# BILL OF MATERIAL

| MARK | QTY | DESCRIPTION | LENGTH | WEIGHT | REMARKS |
|---|---|---|---|---|---|
| N13 | 1 | NON-LOAD BEARING WALL | | | SQ-2 |
| S125 | 1 | 350S162-33 | 16'-1 1/16" | 14.12 | A653-GR.50 |
| BT106 | 1 | 350S162-33 | 3'-10 1/16" | 3.37 | A653-GR.50 |
| S246 | 1 | 350S162-33 | 14'-6 9/16" | 12.77 | A653-GR.50 |
| S247 | 1 | 350S162-33 | 15'-4 3/16" | 13.48 | A653-GR.50 |
| TT93 | 1 | 350S162-33 | 4'-1 5/16" | 3.61 | A653-GR.50 |
| | | TOTAL WEIGHT THIS DRAWING | | 47 | |

| REV | DESCRIPTION | DATE |
|---|---|---|
| | | |

| | | | |
|---|---|---|---|
| DESCRIPTION | | | |
| PROJECT NAME | | | |
| DRAWN BY | VN | JOB No. | DRG No. |
| DATE DRAWN | 07/19/2024 | | N13 |

Tekla structures

FRONT VIEW

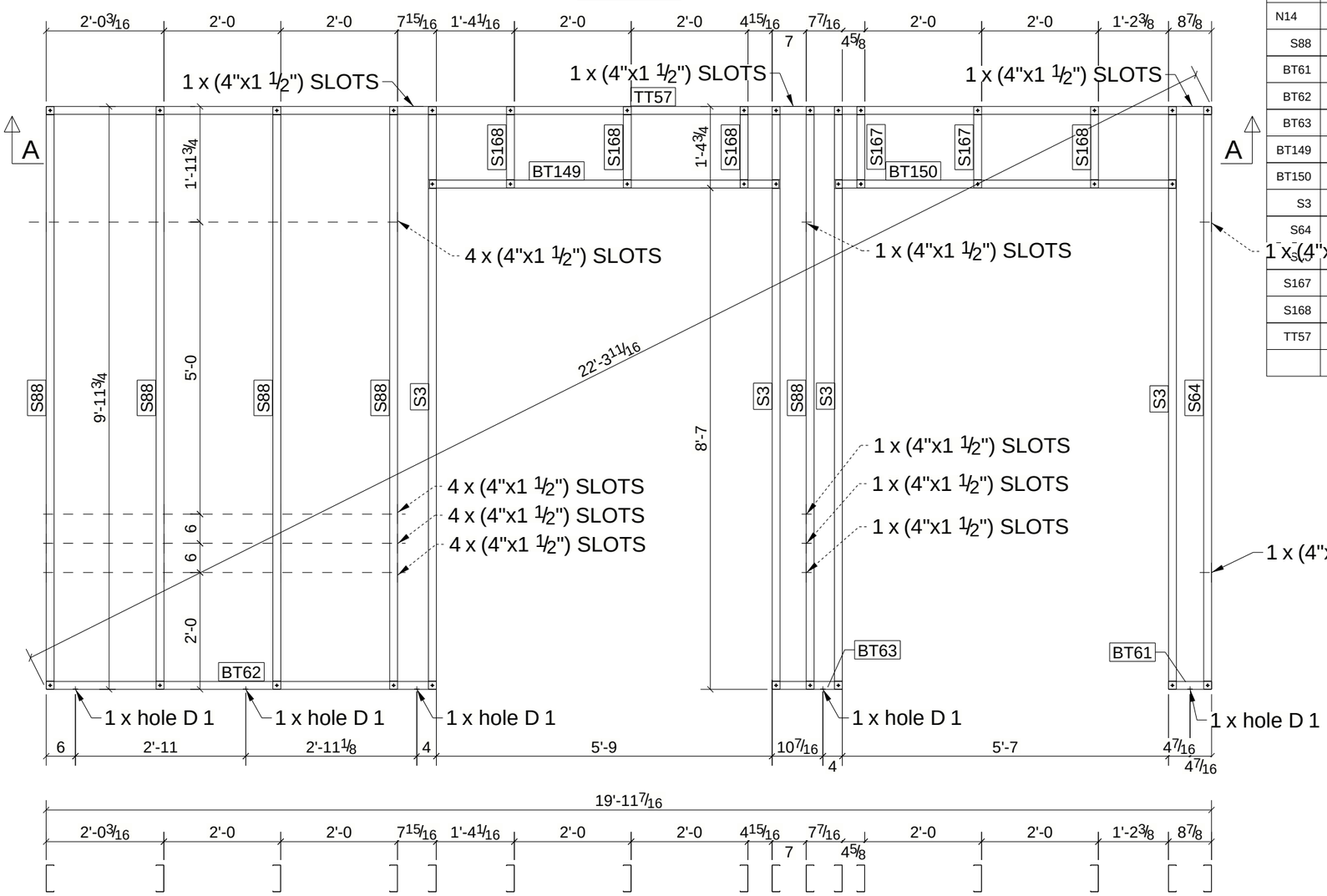


A - A

# BILL OF MATERIAL

| MARK | QTY | DESCRIPTION | LENGTH | WEIGHT | REMARKS |
|---|---|---|---|---|---|
| N14 | 1 | NON-LOAD BEARING WALL | | | SQ-2 |
| S88 | 1 | 550S162-27 | 9'-11 11/16" | 8.49 | A653-GR.50 |
| BT61 | 1 | 550S162-27 | 0'-8 7/8" | 0.63 | A653-GR.50 |
| BT62 | 1 | 550S162-27 | 6'-8 1/8" | 5.68 | A653-GR.50 |
| BT63 | 1 | 550S162-27 | 1'-2 7/16" | 1.02 | A653-GR.50 |
| BT149 | 1 | 550S162-27 | 5'-11 3/4" | 5.09 | A653-GR.50 |
| BT150 | 1 | 550S162-27 | 5'-9 7/8" | 4.96 | A653-GR.50 |
| S3 | 4 | 550S162-27 | 9'-11 11/16" | 33.95 | A653-GR.50 |
| S64 | 1 | 550S162-27 | 9'-11 11/16" | 8.49 | A653-GR.50 |
| [illegible] | [illegible] | [illegible] | 9'-11 11/16" | 33.95 | A653-GR.50 |
| S167 | 2 | 550S162-27 | 1'-4 11/16" | 2.37 | A653-GR.50 |
| S168 | 4 | 550S162-27 | 1'-4 11/16" | 4.73 | A653-GR.50 |
| TT57 | 1 | 550S162-27 | 19'-11 7/16" | 16.98 | A653-GR.50 |
| | | TOTAL WEIGHT THIS DRAWING | | 126 | |

| REV | DESCRIPTION | DATE |
|---|---|---|
| | | |

| | | | |
|---|---|---|---|
| DESCRIPTION | | | |
| PROJECT NAME | | | |
| DRAWN BY | VN | JOB No. | DRG No. |
| DATE DRAWN | 07/19/2024 | | N14 |

Tekla structures

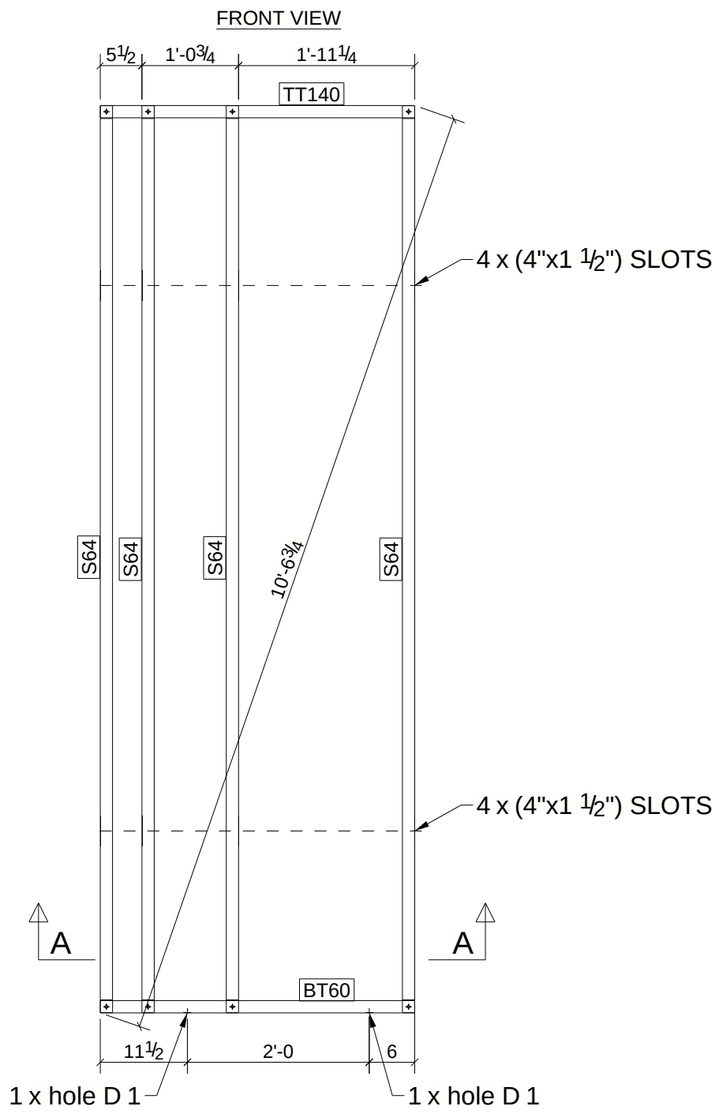


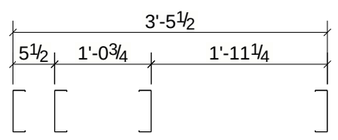


A - A

# BILL OF MATERIAL

| MARK | QTY | DESCRIPTION | LENGTH | WEIGHT | REMARKS |
|---|---|---|---|---|---|
| N15 | 1 | NON-LOAD BEARING WALL | | | SQ-2 |
| S64 | 1 | 550S162-27 | 9'-11 11/16" | 8.49 | A653-GR.50 |
| BT60 | 1 | 550S162-27 | 3'-5 1/2" | 2.94 | A653-GR.50 |
| S64 | 3 | 550S162-27 | 9'-11 11/16" | 25.46 | A653-GR.50 |
| TT140 | 1 | 550S162-27 | 3'-5 1/2" | 2.94 | A653-GR.50 |
| | | TOTAL WEIGHT THIS DRAWING | | 40 | |

| REV | DESCRIPTION | DATE |
|---|---|---|
| | | |

| | | | |
|---|---|---|---|
| DESCRIPTION | | | |
| PROJECT NAME | | | |
| DRAWN BY | VN | JOB No. | DRG No. |
| DATE DRAWN | 07/19/2024 | | N15 |

Tekla structures

FRONT VIEW

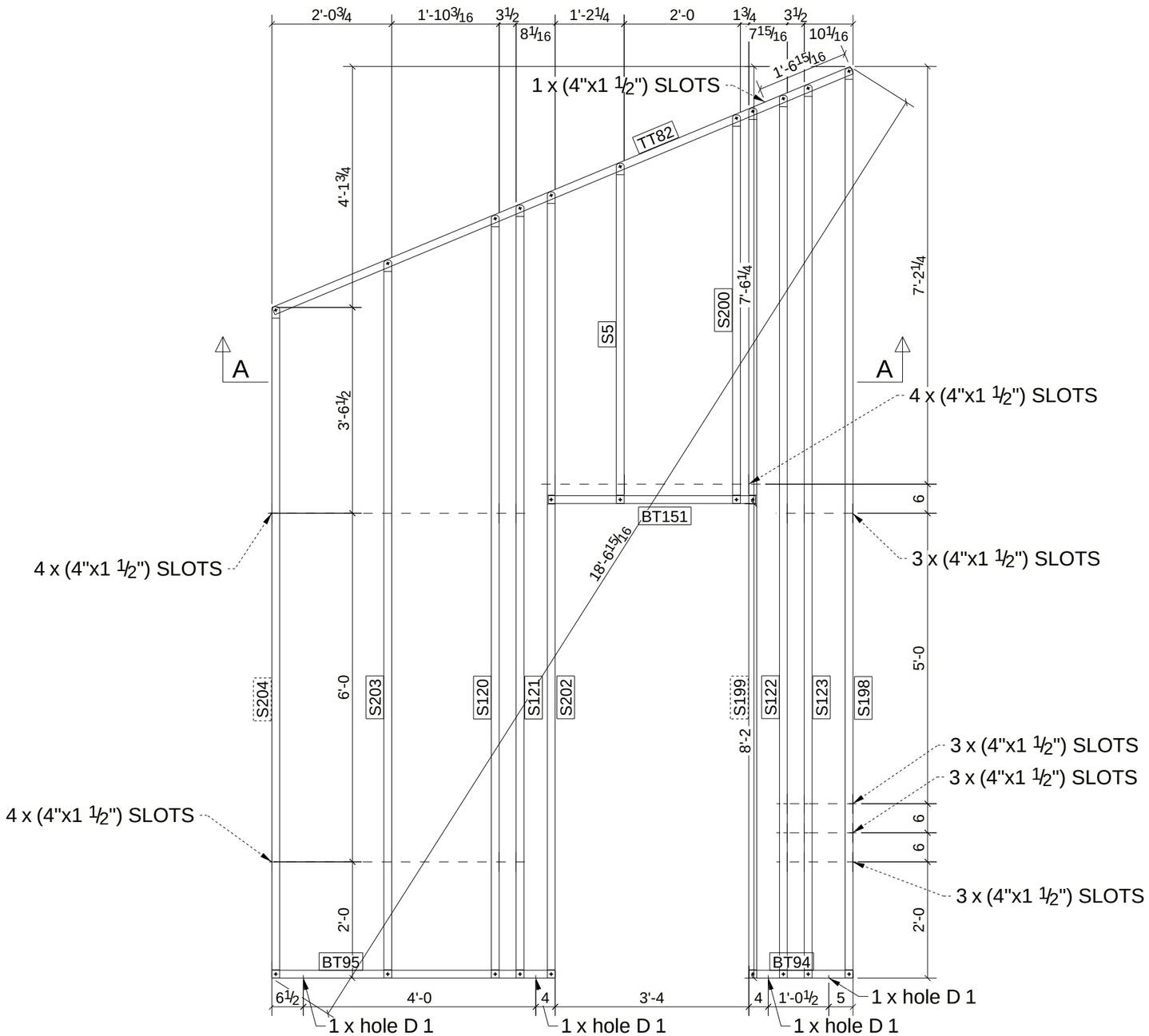


A - A

# BILL OF MATERIAL

| MARK | QTY | DESCRIPTION | LENGTH | WEIGHT | REMARKS |
|---|---|---|---|---|---|
| N16 | 1 | NON-LOAD BEARING WALL | | | SQ-2 |
| S198 | 1 | 550S162-27 | 15'-7 15/16" | 13.32 | A653-GR.50 |
| BT94 | 1 | 550S162-27 | 1'-9 1/2" | 1.52 | A653-GR.50 |
| BT95 | 1 | 550S162-27 | 4'-10 1/2" | 4.15 | A653-GR.50 |
| BT151 | 1 | 550S162-27 | 3'-6 3/4" | 3.03 | A653-GR.50 |
| S5 | 1 | 550S162-27 | 5'-10 1/4" | 4.98 | A653-GR.50 |
| S120 | 1 | 550S162-27 | 13'-1 1/2" | 11.17 | A653-GR.50 |
| S121 | 1 | 550S162-27 | 13'-3 5/8" | 11.32 | A653-GR.50 |
| S122 | 1 | 550S162-27 | 15'-2 1/4" | 12.92 | A653-GR.50 |
| S123 | 1 | 550S162-27 | 15'-4 7/16" | 13.07 | A653-GR.50 |
| S199 | 1 | 550S162-27 | 14'-11 5/8" | 12.74 | A653-GR.50 |
| S200 | 1 | 550S162-27 | 6'-8 1/4" | 5.69 | A653-GR.50 |
| S202 | 1 | 550S162-27 | 13'-6 5/16" | 11.51 | A653-GR.50 |
| S203 | 1 | 550S162-27 | 12'-4 1/4" | 10.51 | A653-GR.50 |
| S204 | 1 | 550S162-27 | 11'-6 5/8" | 9.83 | A653-GR.50 |
| TT82 | 1 | 550S162-27 | 10'-9 3/8" | 9.17 | A653-GR.50 |
| | | TOTAL WEIGHT THIS DRAWING | | 135 | |

| REV | DESCRIPTION | DATE |
|---|---|---|
| | | |

| | | | |
|---|---|---|---|
| DESCRIPTION | | | |
| PROJECT NAME | | | |
| DRAWN BY | VN | JOB No. | DRG No. |
| DATE DRAWN | 07/19/2024 | | N16 |

Tekla structures

FRONT VIEW

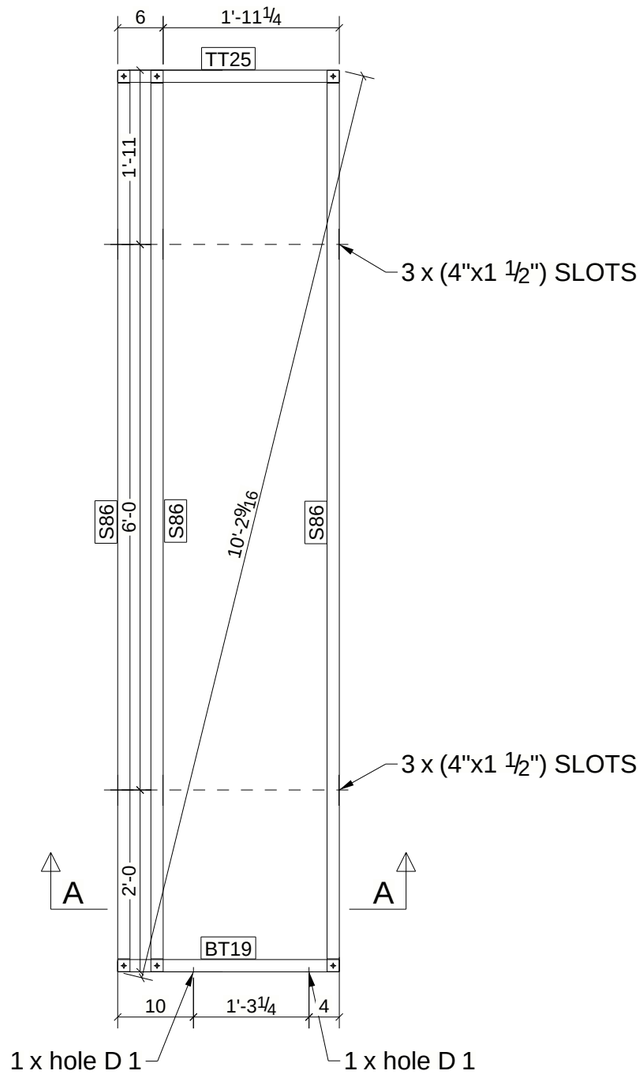


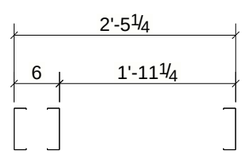


A - A

# BILL OF MATERIAL

| MARK | QTY | DESCRIPTION | LENGTH | WEIGHT | REMARKS |
|---|---|---|---|---|---|
| N17 | 1 | NON-LOAD BEARING WALL | | | SQ-2 |
| S86 | 1 | 550S162-27 | 9'-10 15/16" | 8.43 | A653-GR.50 |
| BT19 | 1 | 550S162-27 | 2'-5 1/4" | 2.07 | A653-GR.50 |
| S86 | 2 | 550S162-27 | 9'-10 15/16" | 16.87 | A653-GR.50 |
| TT25 | 1 | 550S162-27 | 2'-5 1/4" | 2.07 | A653-GR.50 |
| | | TOTAL WEIGHT THIS DRAWING | | 29 | |

| REV | DESCRIPTION | DATE |
|---|---|---|
| | | |

| | | | |
|---|---|---|---|
| DESCRIPTION | | | |
| PROJECT NAME | | | |
| DRAWN BY | VN | JOB No. | DRG No. |
| DATE DRAWN | 07/19/2024 | | N17 |

Tekla structures

# BILL OF MATERIAL

| MARK | QTY | DESCRIPTION | LENGTH | WEIGHT | REMARKS |
|---|---|---|---|---|---|
| N18 | 1 | NON-LOAD BEARING WALL | | | SQ-2 |
| S241 | 1 | 550S162-27 | 4'-11 7/16" | 4.22 | A653-GR.50 |
| BT152 | 1 | 550S162-27 | 3'-10 15/16" | 3.33 | A653-GR.50 |
| S242 | 1 | 550S162-27 | 4'-1 13/16" | 3.53 | A653-GR.50 |
| S243 | 1 | 550S162-27 | 3'-4 5/8" | 2.88 | A653-GR.50 |
| TT91 | 1 | 550S162-27 | 4'-2 1/4" | 3.56 | A653-GR.50 |
| | | TOTAL WEIGHT THIS DRAWING | | 18 | |

FRONT VIEW

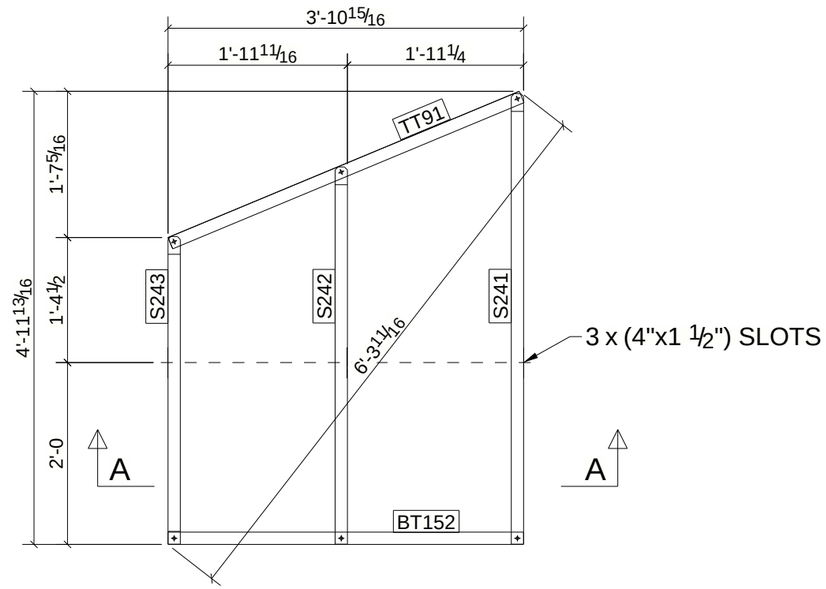


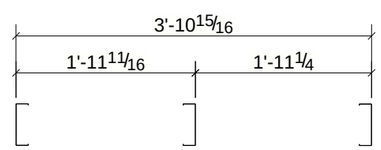


A - A

| REV | DESCRIPTION | DATE |
|---|---|---|
| | | |

| | | | |
|---|---|---|---|
| DESCRIPTION | | | |
| PROJECT NAME | | | |
| DRAWN BY | VN | JOB No. | DRG No. |
| DATE DRAWN | 07/11/2024 | | N18 |

Tekla structures

FRONT VIEW

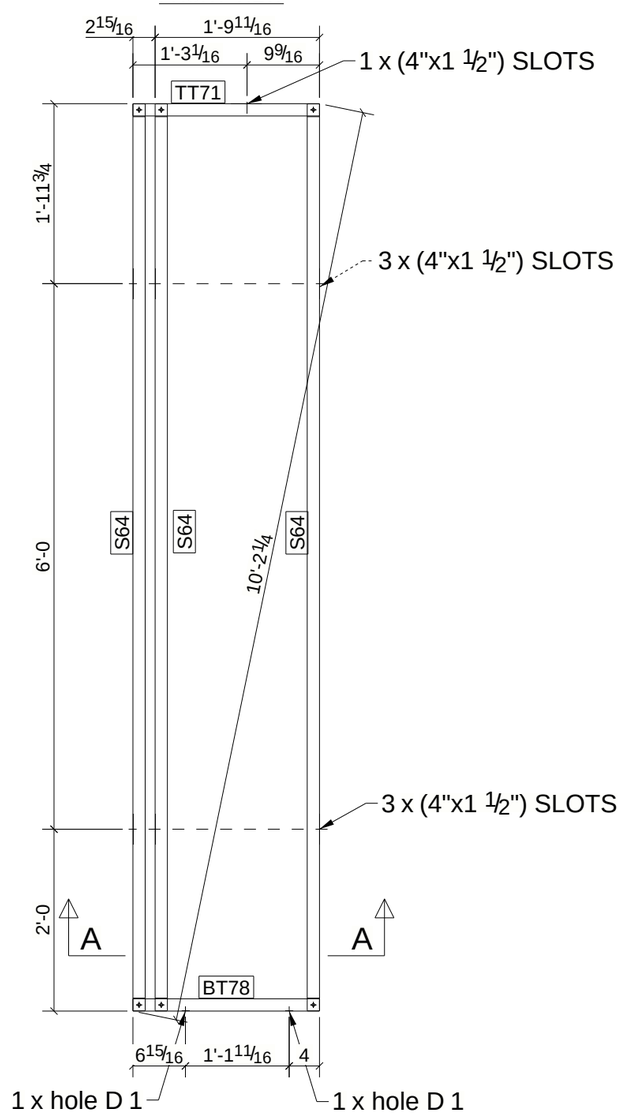


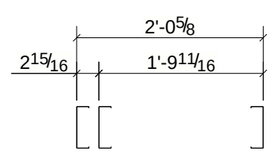


A - A

# BILL OF MATERIAL

| MARK | QTY | DESCRIPTION | LENGTH | WEIGHT | REMARKS |
|---|---|---|---|---|---|
| N19 | 1 | NON-LOAD BEARING WALL | | | SQ-2 |
| S64 | 1 | 550S162-27 | 9'-11 11/16" | 8.49 | A653-GR.50 |
| BT78 | 1 | 550S162-27 | 2'-0 5/8" | 1.75 | A653-GR.50 |
| S64 | 2 | 550S162-27 | 9'-11 11/16" | 16.97 | A653-GR.50 |
| TT71 | 1 | 550S162-27 | 2'-0 5/8" | 1.75 | A653-GR.50 |
| | | TOTAL WEIGHT THIS DRAWING | | 29 | |

| REV | DESCRIPTION | DATE |
|---|---|---|
| | | |

| | | | |
|---|---|---|---|
| DESCRIPTION | | | |
| PROJECT NAME | | | |
| DRAWN BY | VN | JOB No. | DRG No. |
| DATE DRAWN | 08/14/2024 | | N19 |

Tekla structures

FRONT VIEW

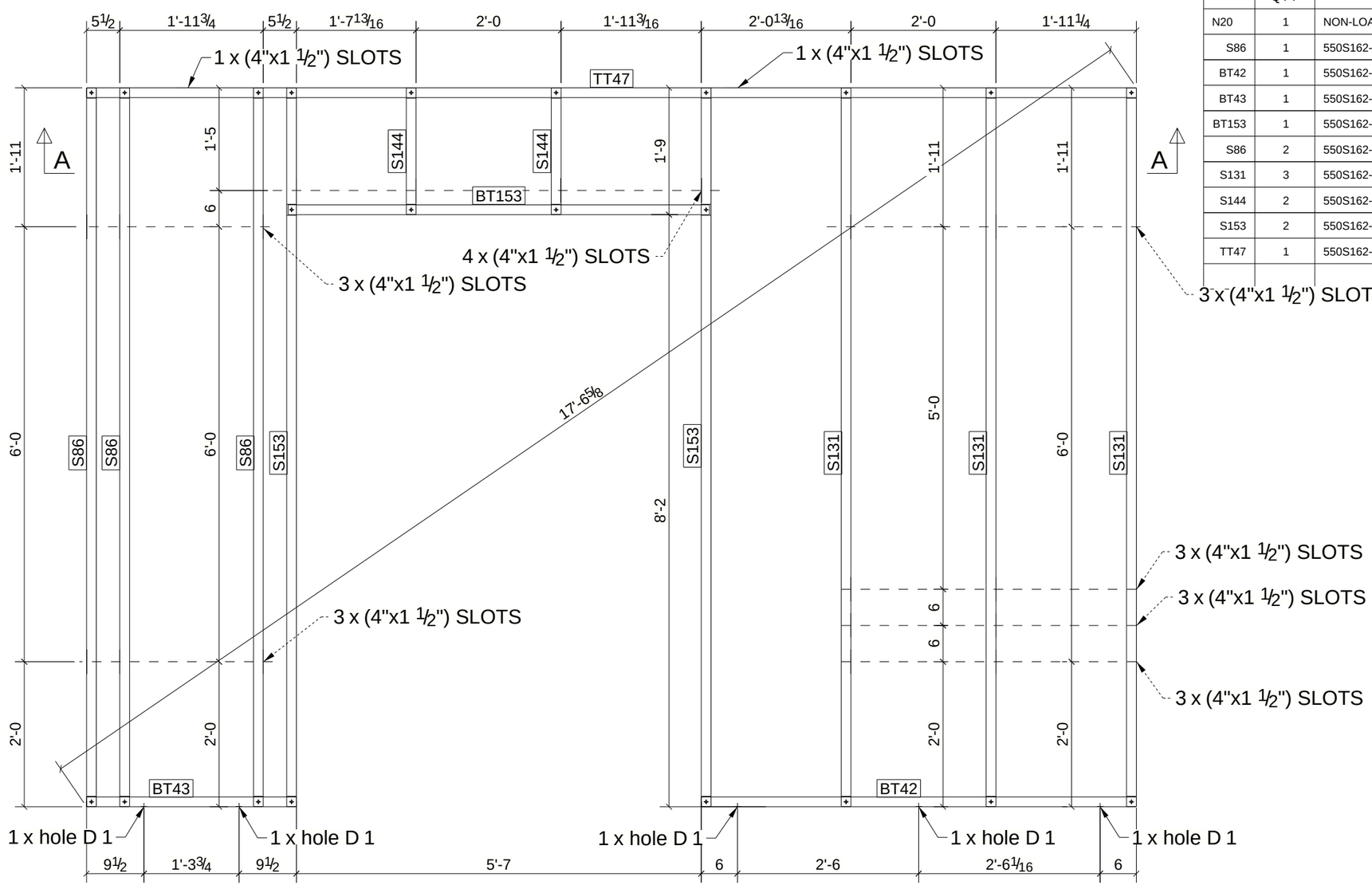


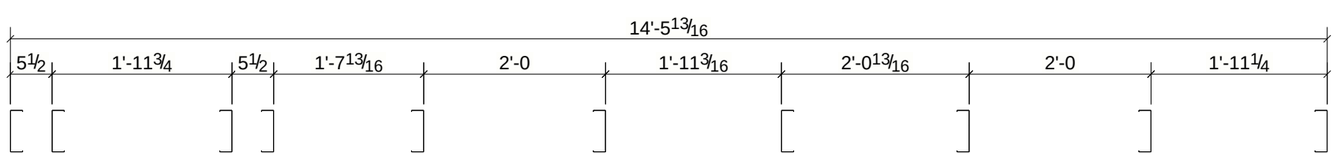


A - A

# BILL OF MATERIAL

| MARK | QTY | DESCRIPTION | LENGTH | WEIGHT | REMARKS |
|---|---|---|---|---|---|
| N20 | 1 | NON-LOAD BEARING WALL | | | SQ-2 |
| S86 | 1 | 550S162-27 | 9'-10 15/16" | 8.43 | A653-GR.50 |
| BT42 | 1 | 550S162-27 | 6'-0 1/16" | 5.11 | A653-GR.50 |
| BT43 | 1 | 550S162-27 | 2'-10 3/4" | 2.46 | A653-GR.50 |
| BT153 | 1 | 550S162-27 | 5'-9 3/4" | 4.95 | A653-GR.50 |
| S86 | 2 | 550S162-27 | 9'-10 15/16" | 16.87 | A653-GR.50 |
| S131 | 3 | 550S162-27 | 9'-10 15/16" | 25.30 | A653-GR.50 |
| S144 | 2 | 550S162-27 | 1'-8 15/16" | 2.97 | A653-GR.50 |
| S153 | 2 | 550S162-27 | 9'-10 15/16" | 16.87 | A653-GR.50 |
| TT47 | 1 | 550S162-27 | 14'-5 13/16" | 12.32 | A653-GR.50 |
| | | TOTAL WEIGHT THIS DRAWING | | 95 | |

| REV | DESCRIPTION | DATE |
|---|---|---|
| | | |

| | | | |
|---|---|---|---|
| DESCRIPTION | | | |
| PROJECT NAME | | | |
| DRAWN BY | VN | JOB No. | DRG No. |
| DATE DRAWN | 07/19/2024 | | N20 |

Tekla structures

# BILL OF MATERIAL

| MARK | QTY | DESCRIPTION | LENGTH | WEIGHT | REMARKS |
|---|---|---|---|---|---|
| N21 | 1 | NON-LOAD BEARING WALL | | | SQ-2 |
| S88 | 1 | 550S162-27 | 9'-11 11/16" | 8.49 | A653-GR.50 |
| BT64 | 1 | 550S162-27 | 5'-6 1/2" | 4.71 | A653-GR.50 |
| S88 | 3 | 550S162-27 | 9'-11 11/16" | 25.46 | A653-GR.50 |
| TT58 | 1 | 550S162-27 | 5'-6 1/2" | 4.71 | A653-GR.50 |
| | | TOTAL WEIGHT THIS DRAWING | | 43 | |

FRONT VIEW

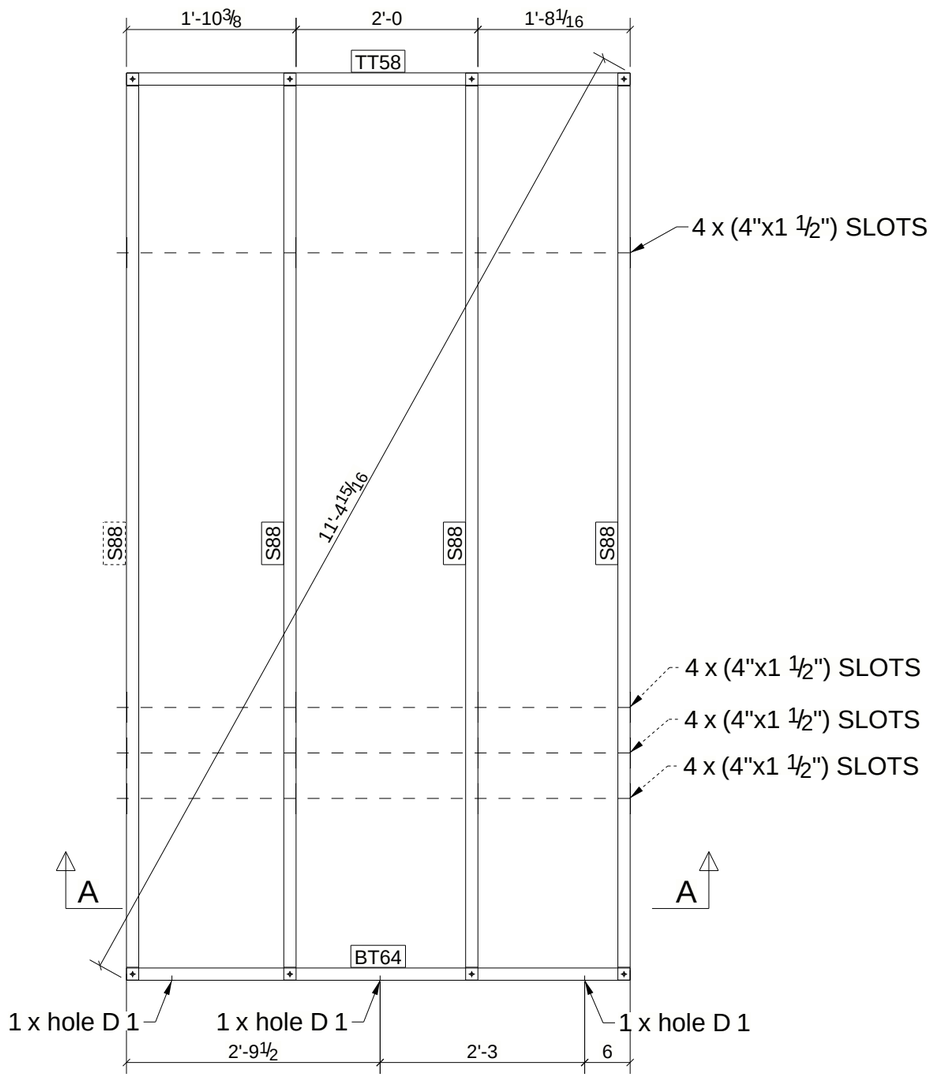


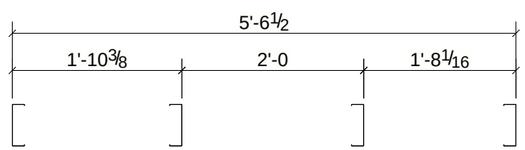


A - A

| REV | DESCRIPTION | DATE |
|---|---|---|
| | | |

| | | | |
|---|---|---|---|
| DESCRIPTION | | | |
| PROJECT NAME | | | |
| DRAWN BY | VN | JOB No. | DRG No. |
| DATE DRAWN | 07/19/2024 | | N21 |

Tekla structures

FRONT VIEW

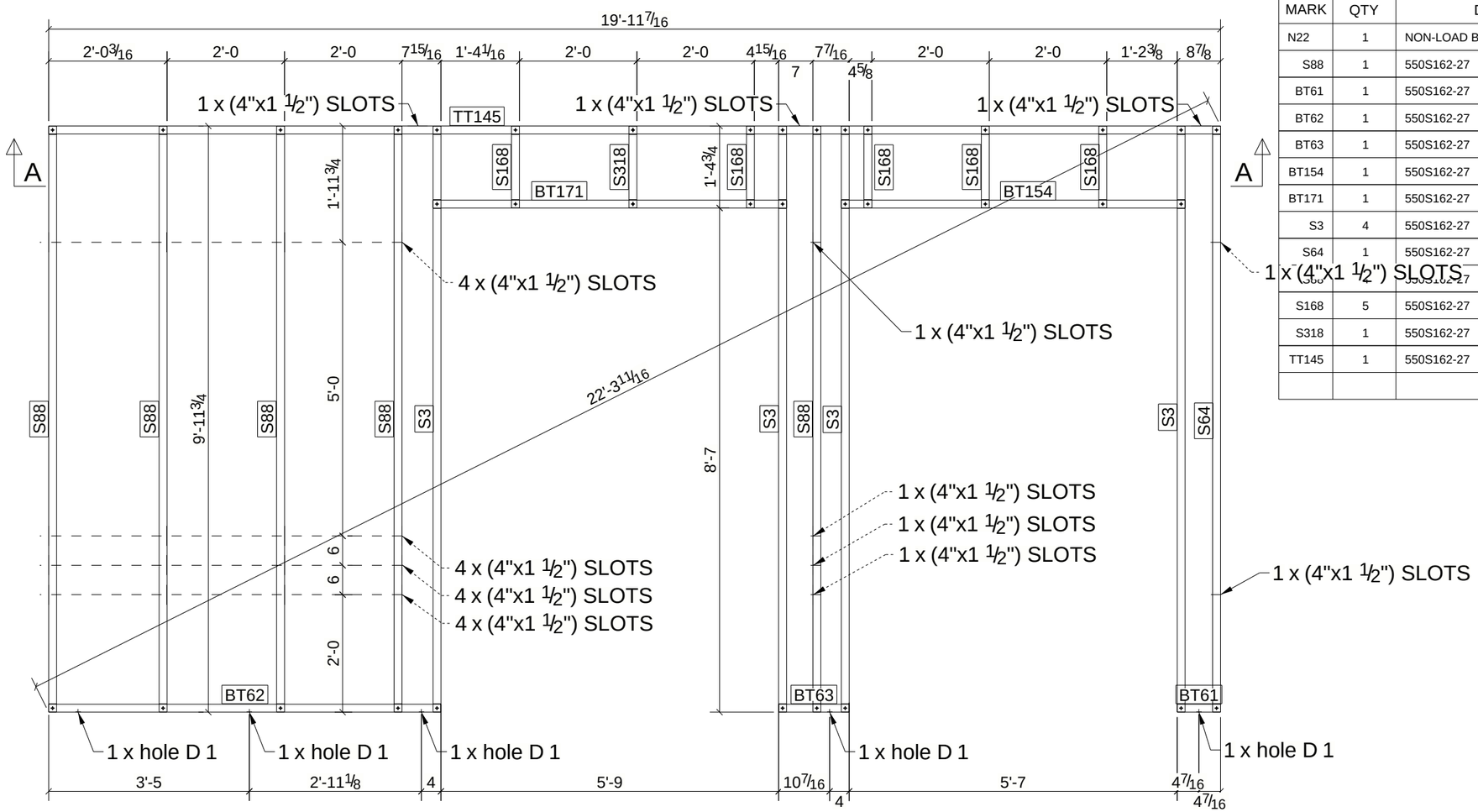


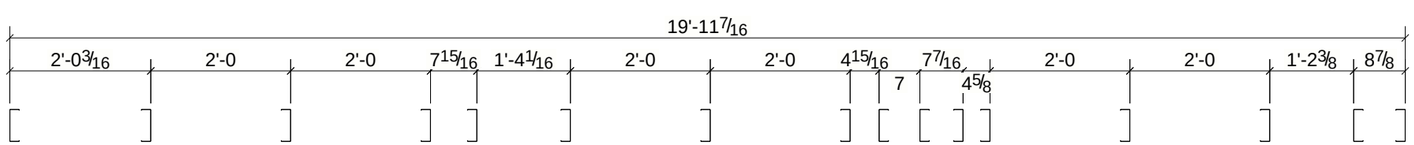


A - A

# BILL OF MATERIAL

| MARK | QTY | DESCRIPTION | LENGTH | WEIGHT | REMARKS |
|---|---|---|---|---|---|
| N22 | 1 | NON-LOAD BEARING WALL | | | SQ-2 |
| S88 | 1 | 550S162-27 | 9'-11 11/16" | 8.49 | A653-GR.50 |
| BT61 | 1 | 550S162-27 | 0'-8 7/8" | 0.63 | A653-GR.50 |
| BT62 | 1 | 550S162-27 | 6'-8 1/8" | 5.68 | A653-GR.50 |
| BT63 | 1 | 550S162-27 | 1'-2 7/16" | 1.02 | A653-GR.50 |
| BT154 | 1 | 550S162-27 | 5'-10 1/4" | 4.98 | A653-GR.50 |
| BT171 | 1 | 550S162-27 | 6'-0 1/4" | 5.12 | A653-GR.50 |
| S3 | 4 | 550S162-27 | 9'-11 11/16" | 33.95 | A653-GR.50 |
| S64 | 1 | 550S162-27 | 9'-11 11/16" | 8.49 | A653-GR.50 |
| S[illegible] | [illegible] | [illegible] | 9'-11 11/16" | 33.95 | A653-GR.50 |
| S168 | 5 | 550S162-27 | 1'-4 11/16" | 5.92 | A653-GR.50 |
| S318 | 1 | 550S162-27 | 1'-4 11/16" | 1.18 | A653-GR.50 |
| TT145 | 1 | 550S162-27 | 19'-11 7/16" | 16.98 | A653-GR.50 |
| | | TOTAL WEIGHT THIS DRAWING | | 126 | |

| REV | DESCRIPTION | DATE |
|---|---|---|
| | | |

| | | | |
|---|---|---|---|
| DESCRIPTION | | | |
| PROJECT NAME | | | |
| DRAWN BY | VN | JOB No. | DRG No. |
| DATE DRAWN | 07/19/2024 | | N22 |

Tekla structures

FRONT VIEW

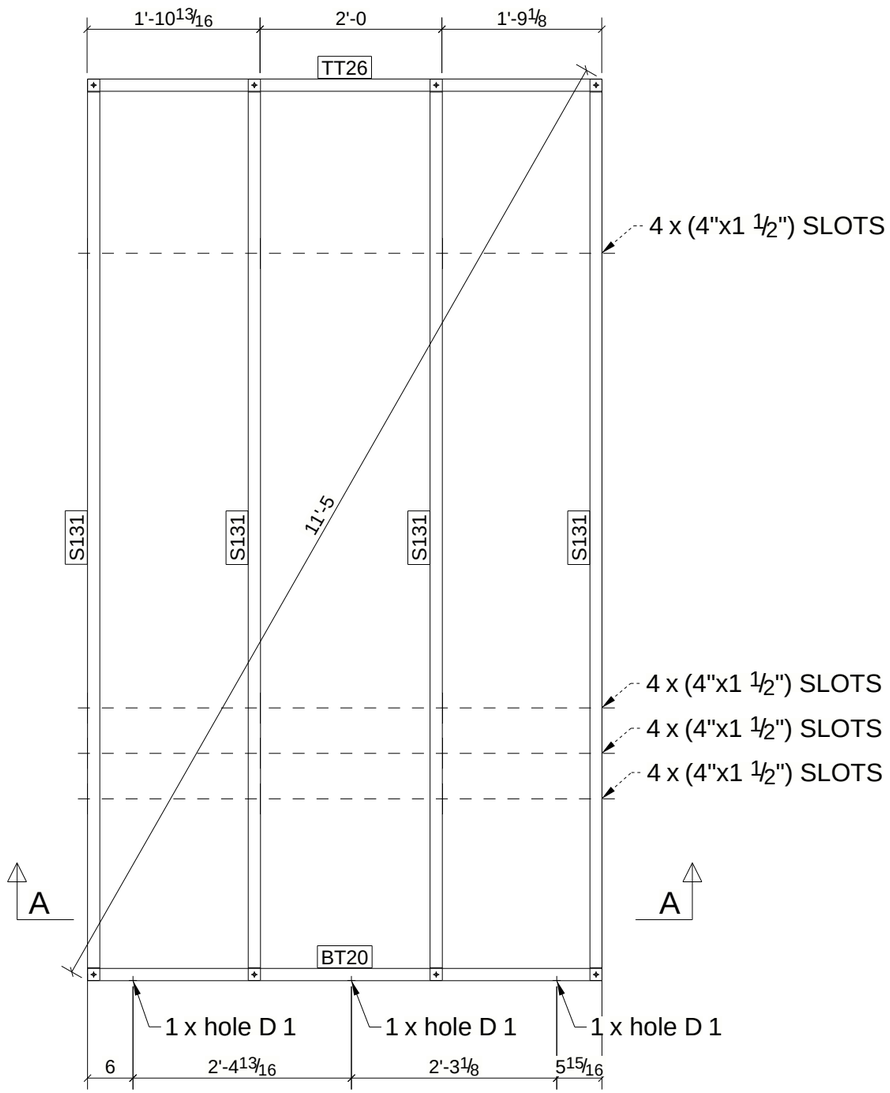


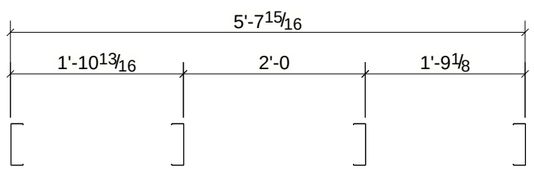


A - A

# BILL OF MATERIAL

| MARK | QTY | DESCRIPTION | LENGTH | WEIGHT | REMARKS |
|---|---|---|---|---|---|
| N23 | 1 | NON-LOAD BEARING WALL | | | SQ-2 |
| S131 | 1 | 550S162-27 | 9'-10 15/16" | 8.43 | A653-GR.50 |
| BT20 | 1 | 550S162-27 | 5'-7 15/16" | 4.82 | A653-GR.50 |
| S131 | 3 | 550S162-27 | 9'-10 15/16" | 25.30 | A653-GR.50 |
| TT26 | 1 | 550S162-27 | 5'-7 15/16" | 4.82 | A653-GR.50 |
| | | TOTAL WEIGHT THIS DRAWING | | 43 | |

| REV | DESCRIPTION | DATE |
|---|---|---|
| | | |

| | | | |
|---|---|---|---|
| DESCRIPTION | | | |
| PROJECT NAME | | | |
| DRAWN BY | VN | JOB No. | DRG No. |
| DATE DRAWN | 07/19/2024 | | N23 |

Tekla structures

FRONT VIEW

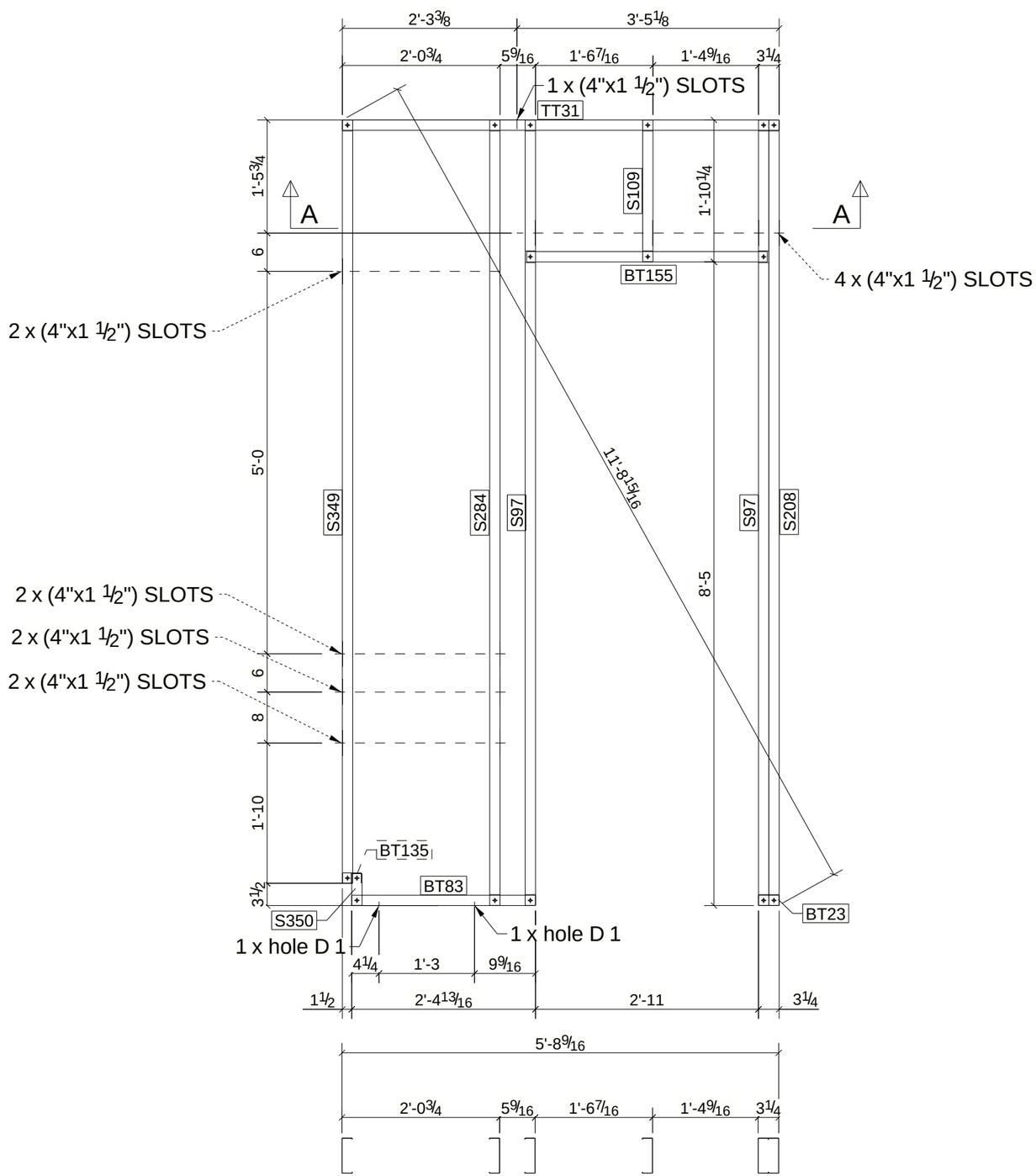


A - A

# BILL OF MATERIAL

| MARK | QTY | DESCRIPTION | LENGTH | WEIGHT | REMARKS |
|---|---|---|---|---|---|
| N24 | 1 | NON-LOAD BEARING WALL | | | SQ-2 |
| S97 | 1 | 550S162-27 | 10'-3 3/16" | 8.73 | A653-GR.50 |
| BT23 | 1 | 550S162-27 | 0'-3 1/4" | 0.23 | A653-GR.50 |
| BT83 | 1 | 550S162-27 | 2'-4 13/16" | 2.04 | A653-GR.50 |
| BT135 | 1 | 550S162-27 | 0'-2 15/16" | 0.21 | A653-GR.50 |
| BT155 | 1 | 550S162-27 | 3'-1 3/4" | 2.68 | A653-GR.50 |
| S97 | 1 | 550S162-27 | 10'-3 3/16" | 8.73 | A653-GR.50 |
| S109 | 1 | 550S162-27 | 1'-10 1/4" | 1.58 | A653-GR.50 |
| S208 | 1 | 550S162-27 | 10'-3 3/16" | 8.73 | A653-GR.50 |
| S284 | 1 | 550S162-27 | 10'-3 3/16" | 8.73 | A653-GR.50 |
| S349 | 1 | 550S162-27 | 9'-11 3/4" | 8.49 | A653-GR.50 |
| S350 | 1 | 550S162-27 | 0'-5" | 0.35 | A653-GR.50 |
| TT31 | 1 | 550S162-27 | 5'-8 9/16" | 4.86 | A653-GR.50 |
| | | TOTAL WEIGHT THIS DRAWING | | 55 | |

| REV | DESCRIPTION | DATE |
|---|---|---|
| | | |

| | | | |
|---|---|---|---|
| DESCRIPTION | | | |
| PROJECT NAME | | | |
| DRAWN BY | VN | JOB No. | DRG No. |
| DATE DRAWN | 07/19/2024 | | N24 |

Tekla structures

FRONT VIEW

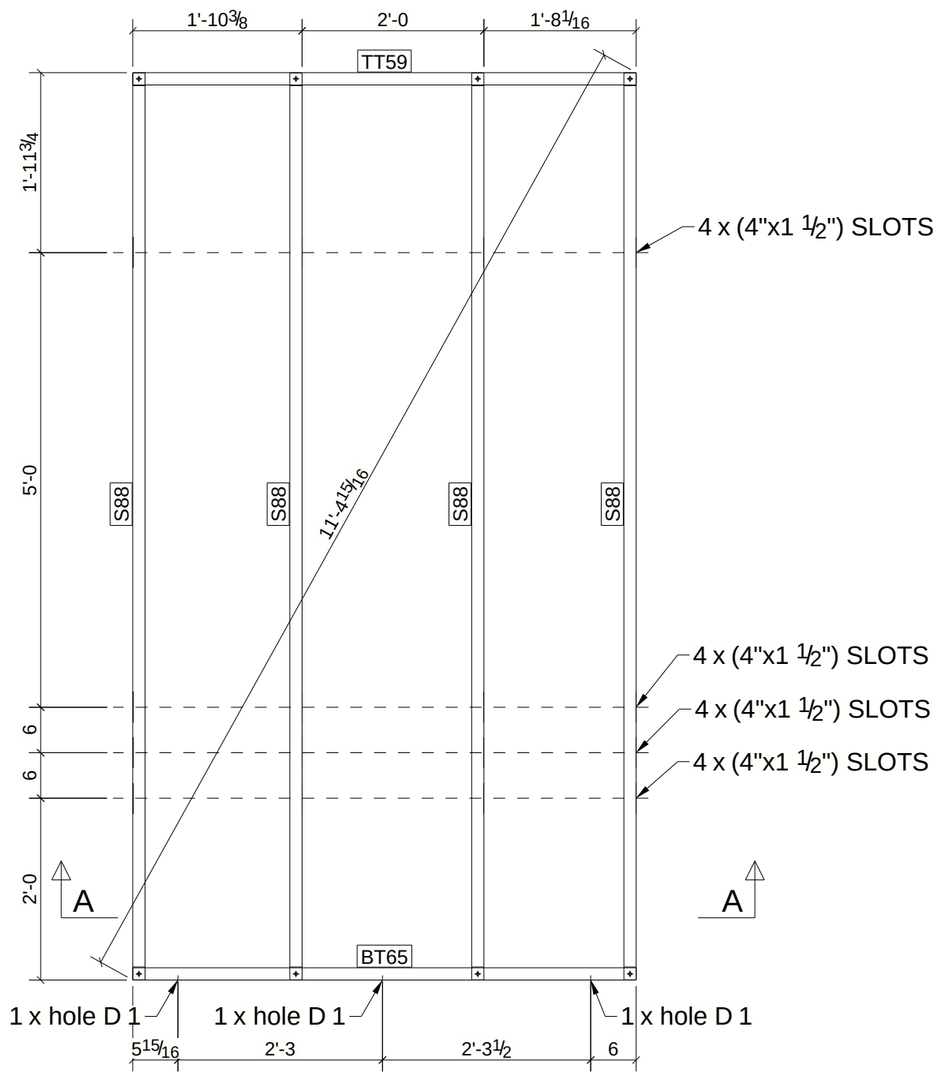


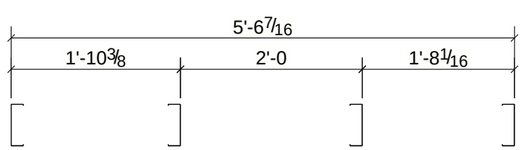


A - A

# BILL OF MATERIAL

| MARK | QTY | DESCRIPTION | LENGTH | WEIGHT | REMARKS |
|---|---|---|---|---|---|
| N25 | 1 | NON-LOAD BEARING WALL | | | SQ-2 |
| S88 | 1 | 550S162-27 | 9'-11 11/16" | 8.49 | A653-GR.50 |
| BT65 | 1 | 550S162-27 | 5'-6 7/16" | 4.71 | A653-GR.50 |
| S88 | 3 | 550S162-27 | 9'-11 11/16" | 25.46 | A653-GR.50 |
| TT59 | 1 | 550S162-27 | 5'-6 7/16" | 4.71 | A653-GR.50 |
| | | TOTAL WEIGHT THIS DRAWING | | 43 | |

| REV | DESCRIPTION | DATE |
|---|---|---|
| | | |

| | | | |
|---|---|---|---|
| DESCRIPTION | | | |
| PROJECT NAME | | | |
| DRAWN BY | VN | JOB No. | DRG No. |
| DATE DRAWN | 07/19/2024 | | N25 |

Tekla structures

FRONT VIEW

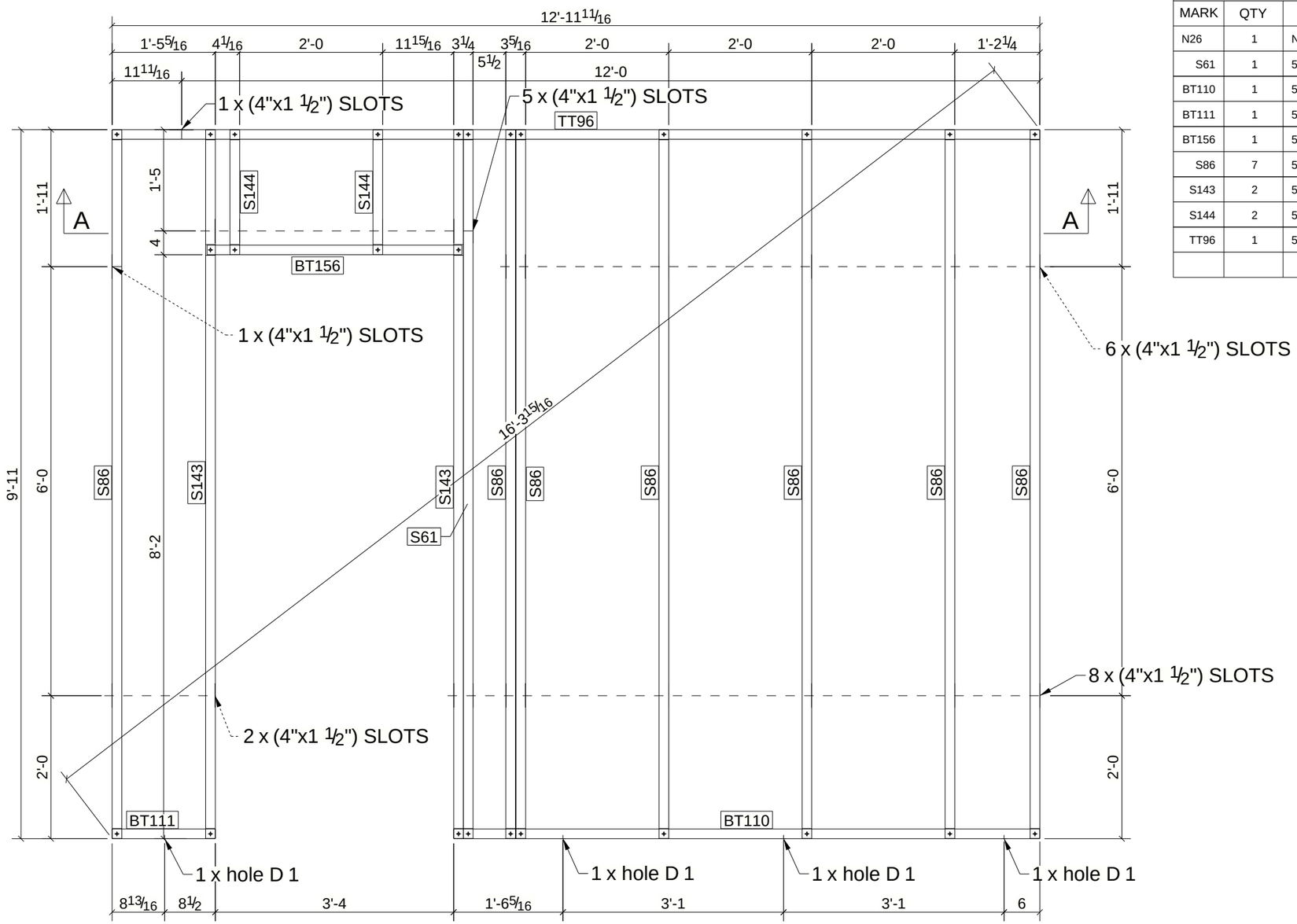


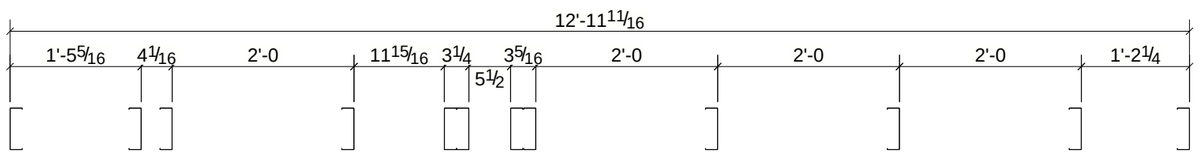


A - A

# BILL OF MATERIAL

| MARK | QTY | DESCRIPTION | LENGTH | WEIGHT | REMARKS |
|---|---|---|---|---|---|
| N26 | 1 | NON-LOAD BEARING WALL | | | SQ-2 |
| S61 | 1 | 550S162-27 | 9'-10 15/16" | 8.43 | A653-GR.50 |
| BT110 | 1 | 550S162-27 | 8'-2 3/8" | 6.97 | A653-GR.50 |
| BT111 | 1 | 550S162-27 | 1'-5 5/16" | 1.23 | A653-GR.50 |
| BT156 | 1 | 550S162-27 | 3'-6 3/4" | 3.03 | A653-GR.50 |
| S86 | 7 | 550S162-27 | 9'-10 15/16" | 59.03 | A653-GR.50 |
| S143 | 2 | 550S162-27 | 9'-10 15/16" | 16.87 | A653-GR.50 |
| S144 | 2 | 550S162-27 | 1'-8 15/16" | 2.97 | A653-GR.50 |
| TT96 | 1 | 550S162-27 | 12'-11 11*** | 11.04 | A653-GR.50 |
| | | TOTAL WEIGHT THIS DRAWING | | 110 | |

| REV | DESCRIPTION | DATE |
|---|---|---|
| | | |

| | | | |
|---|---|---|---|
| DESCRIPTION | | | |
| PROJECT NAME | | | |
| DRAWN BY | VN | JOB No. | DRG No. |
| DATE DRAWN | 07/19/2024 | | N26 |

Tekla structures

FRONT VIEW

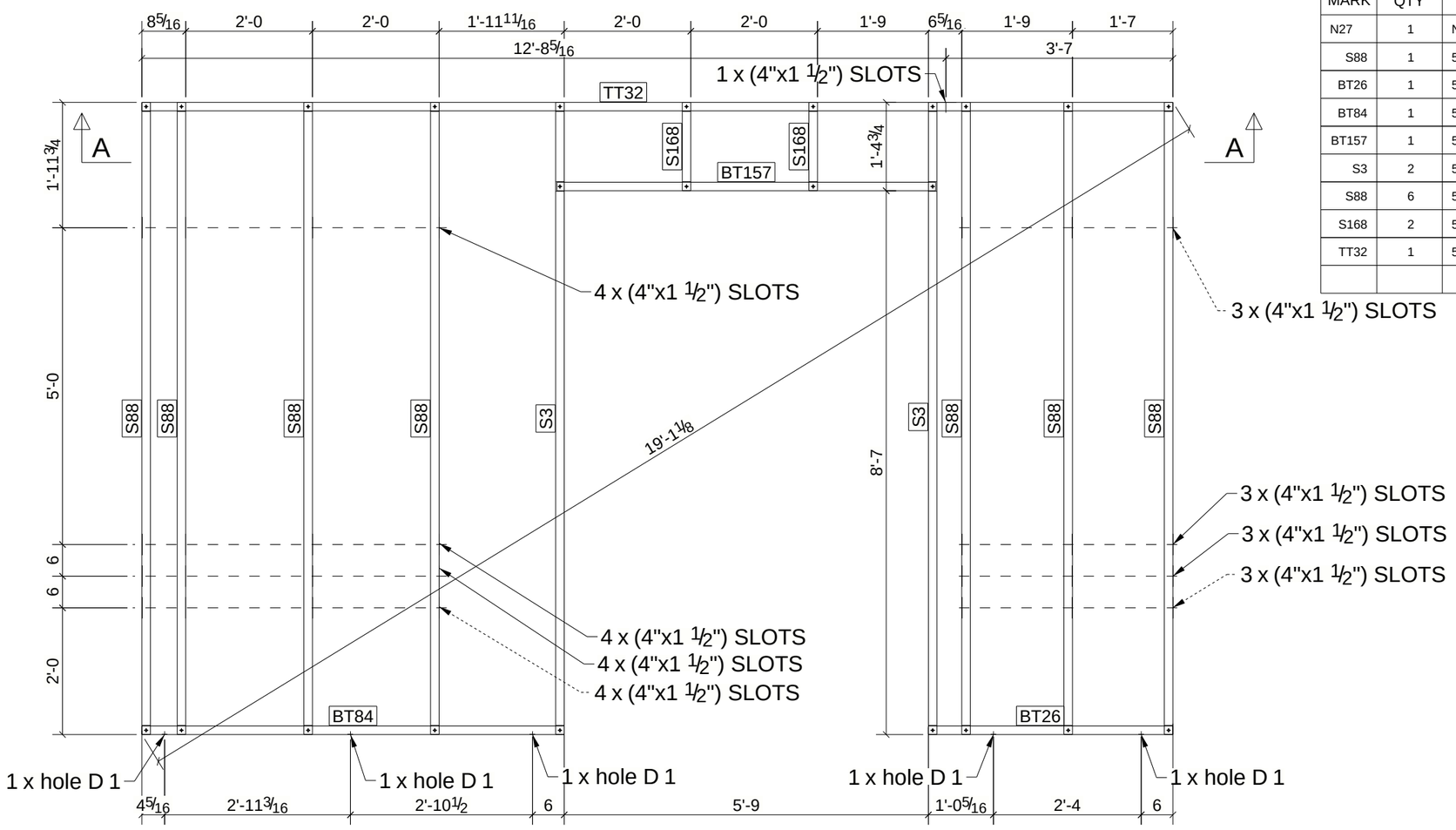


A - A

# BILL OF MATERIAL

| MARK | QTY | DESCRIPTION | LENGTH | WEIGHT | REMARKS |
|---|---|---|---|---|---|
| N27 | 1 | NON-LOAD BEARING WALL | | | SQ-2 |
| S88 | 1 | 550S162-27 | 9'-11 11/16" | 8.49 | A653-GR.50 |
| BT26 | 1 | 550S162-27 | 3'-10 5/16" | 3.28 | A653-GR.50 |
| BT84 | 1 | 550S162-27 | 6'-8" | 5.67 | A653-GR.50 |
| BT157 | 1 | 550S162-27 | 5'-11 3/4" | 5.09 | A653-GR.50 |
| S3 | 2 | 550S162-27 | 9'-11 11/16" | 16.97 | A653-GR.50 |
| S88 | 6 | 550S162-27 | 9'-11 11/16" | 50.92 | A653-GR.50 |
| S168 | 2 | 550S162-27 | 1'-4 11/16" | 2.37 | A653-GR.50 |
| TT32 | 1 | 550S162-27 | 16'-3 5/16" | 13.85 | A653-GR.50 |
| | | TOTAL WEIGHT THIS DRAWING | | 107 | |

| REV | DESCRIPTION | DATE |
|---|---|---|
| | | |

| | | | |
|---|---|---|---|
| DESCRIPTION | | | |
| PROJECT NAME | | | |
| DRAWN BY | VN | JOB No. | DRG No. |
| DATE DRAWN | 07/19/2024 | | N27 |

Tekla structures

# BILL OF MATERIAL

| MARK | QTY | DESCRIPTION | LENGTH | WEIGHT | REMARKS |
|---|---|---|---|---|---|
| N28 | 1 | NON-LOAD BEARING WALL | | | SQ-2 |
| S64 | 1 | 550S162-27 | 9'-11 11/16" | 8.49 | A653-GR.50 |
| BT68 | 1 | 550S162-27 | 3'-5 1/8" | 2.91 | A653-GR.50 |
| S64 | 3 | 550S162-27 | 9'-11 11/16" | 25.46 | A653-GR.50 |
| TT62 | 1 | 550S162-27 | 3'-5 1/8" | 2.91 | A653-GR.50 |
| | | TOTAL WEIGHT THIS DRAWING | | 40 | |

FRONT VIEW

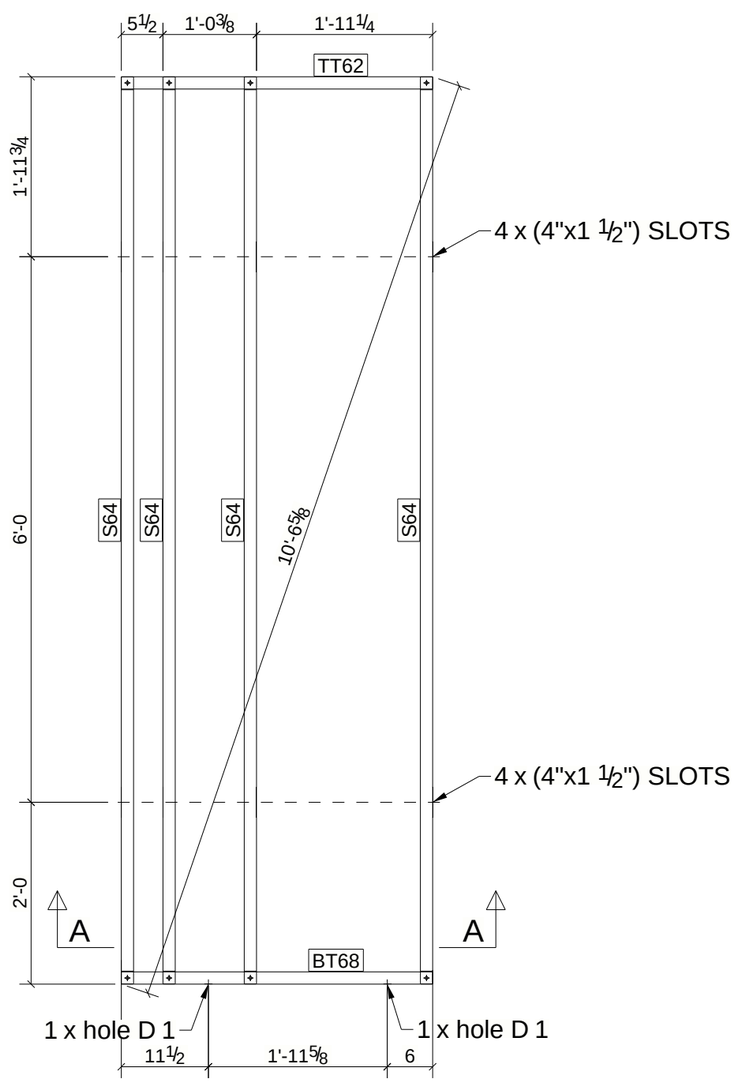


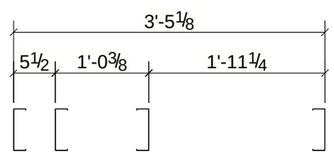


A - A

| REV | DESCRIPTION | DATE |
|---|---|---|
| | | |

| | | | |
|---|---|---|---|
| DESCRIPTION | | | |
| PROJECT NAME | | | |
| DRAWN BY | VN | JOB No. | DRG No. |
| DATE DRAWN | 07/19/2024 | | N28 |

Tekla structures

# BILL OF MATERIAL

| MARK | QTY | DESCRIPTION | LENGTH | WEIGHT | REMARKS |
|---|---|---|---|---|---|
| N29 | 1 | NON-LOAD BEARING WALL | | | SQ-2 |
| S286 | 1 | 550S162-27 | 5'-4 5/16" | 4.56 | A653-GR.50 |
| BT123 | 1 | 550S162-27 | 4'-5 1/4" | 3.78 | A653-GR.50 |
| S285 | 1 | 550S162-27 | 5'-4 5/16" | 4.56 | A653-GR.50 |
| S286 | 3 | 550S162-27 | 5'-4 5/16" | 13.68 | A653-GR.50 |
| TT107 | 1 | 550S162-27 | 4'-5 1/4" | 3.78 | A653-GR.50 |
| | | TOTAL WEIGHT THIS DRAWING | | 30 | |

FRONT VIEW

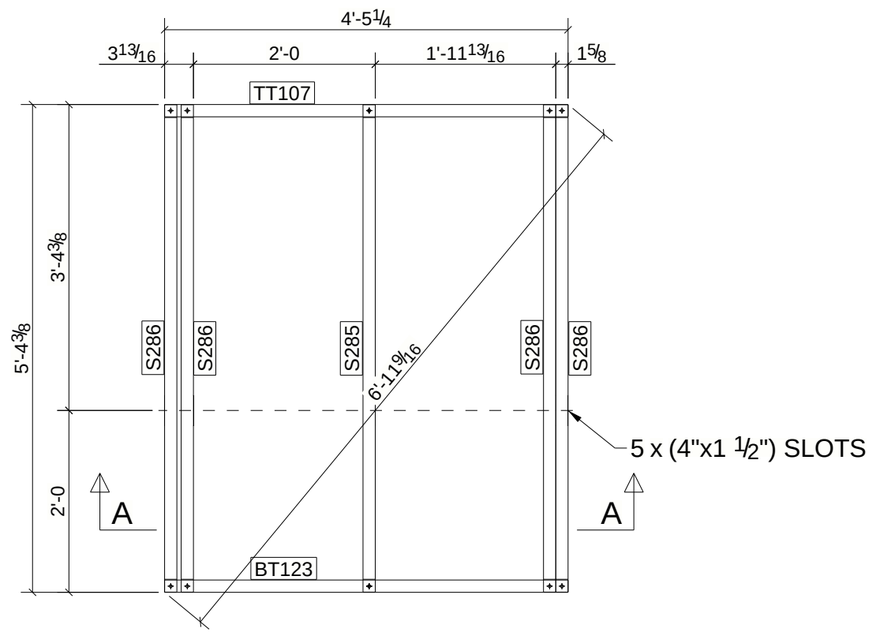


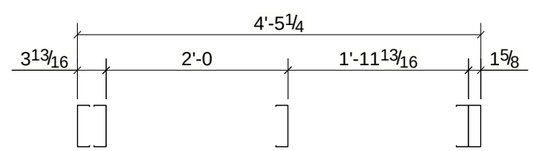


A - A

| REV | DESCRIPTION | DATE |
|---|---|---|
| | | |

| | | | |
|---|---|---|---|
| DESCRIPTION | | | |
| PROJECT NAME | | | |
| DRAWN BY | VN | JOB No. | DRG No. |
| DATE DRAWN | 07/19/2024 | | N29 |

Tekla structures

# BILL OF MATERIAL

| MARK | QTY | DESCRIPTION | LENGTH | WEIGHT | REMARKS |
|---|---|---|---|---|---|
| N30 | 1 | NON-LOAD BEARING WALL | | | SQ-2 |
| S64 | 1 | 550S162-27 | 9'-11 11/16" | 8.49 | A653-GR.50 |
| BT72 | 1 | 550S162-27 | 19'-11 7/16" | 16.98 | A653-GR.50 |
| S64 | 14 | 550S162-27 | 9'-11 11/16" | 118.81 | A653-GR.50 |
| TT66 | 1 | 550S162-27 | 19'-11 7/16" | 16.98 | A653-GR.50 |
| | | TOTAL WEIGHT THIS DRAWING | | 161 | |

FRONT VIEW

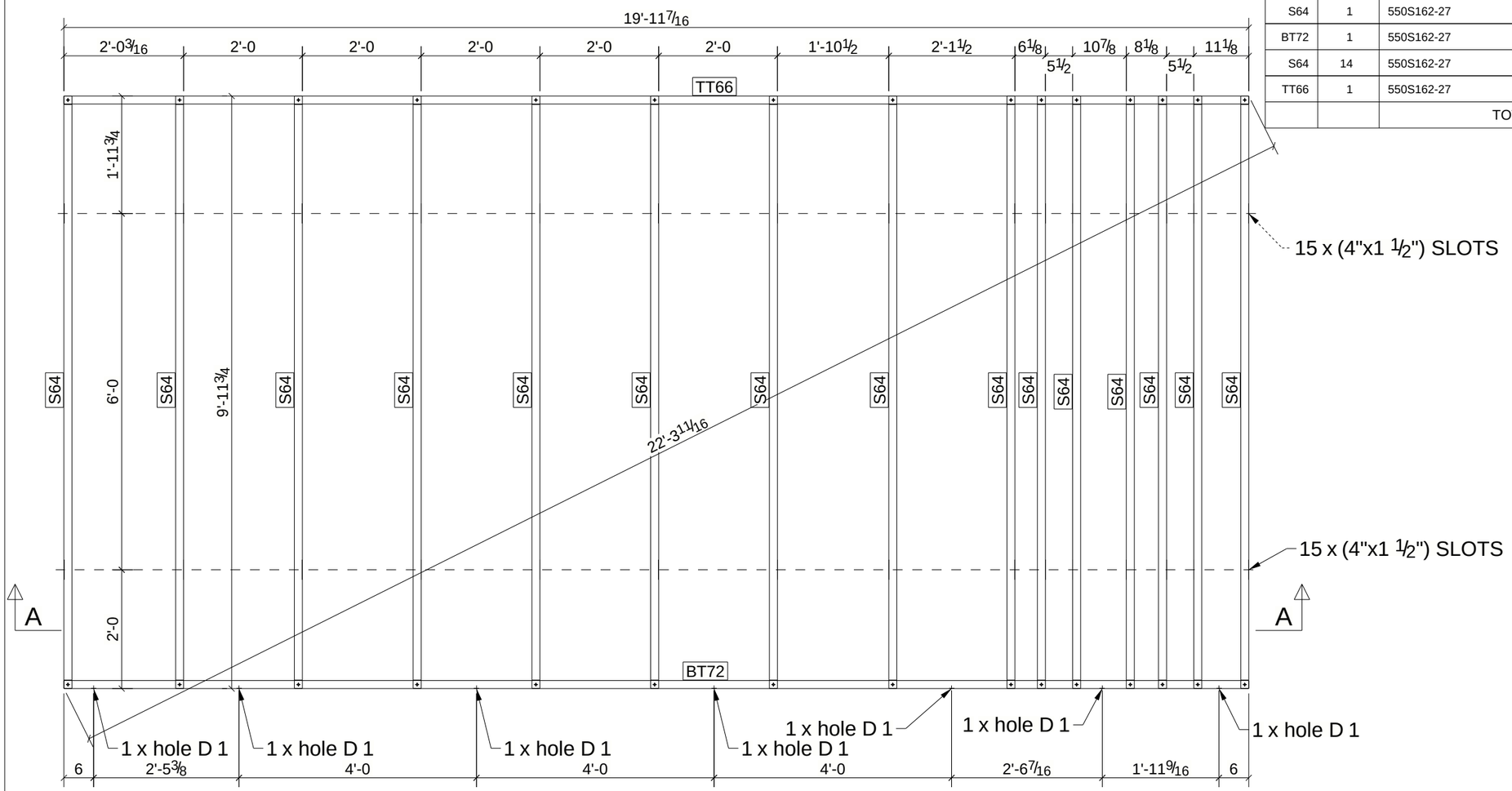


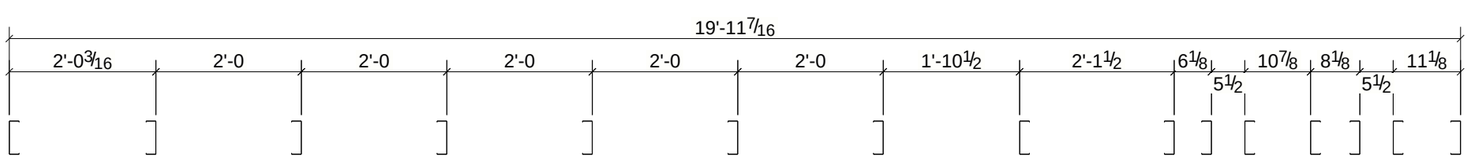


A - A

| REV | DESCRIPTION | DATE |
|---|---|---|
| | | |

| | | | |
|---|---|---|---|
| DESCRIPTION | | | |
| PROJECT NAME | | | |
| DRAWN BY | VN | JOB No. | DRG No. |
| DATE DRAWN | 07/19/2024 | | N30 |

Tekla structures

FRONT VIEW

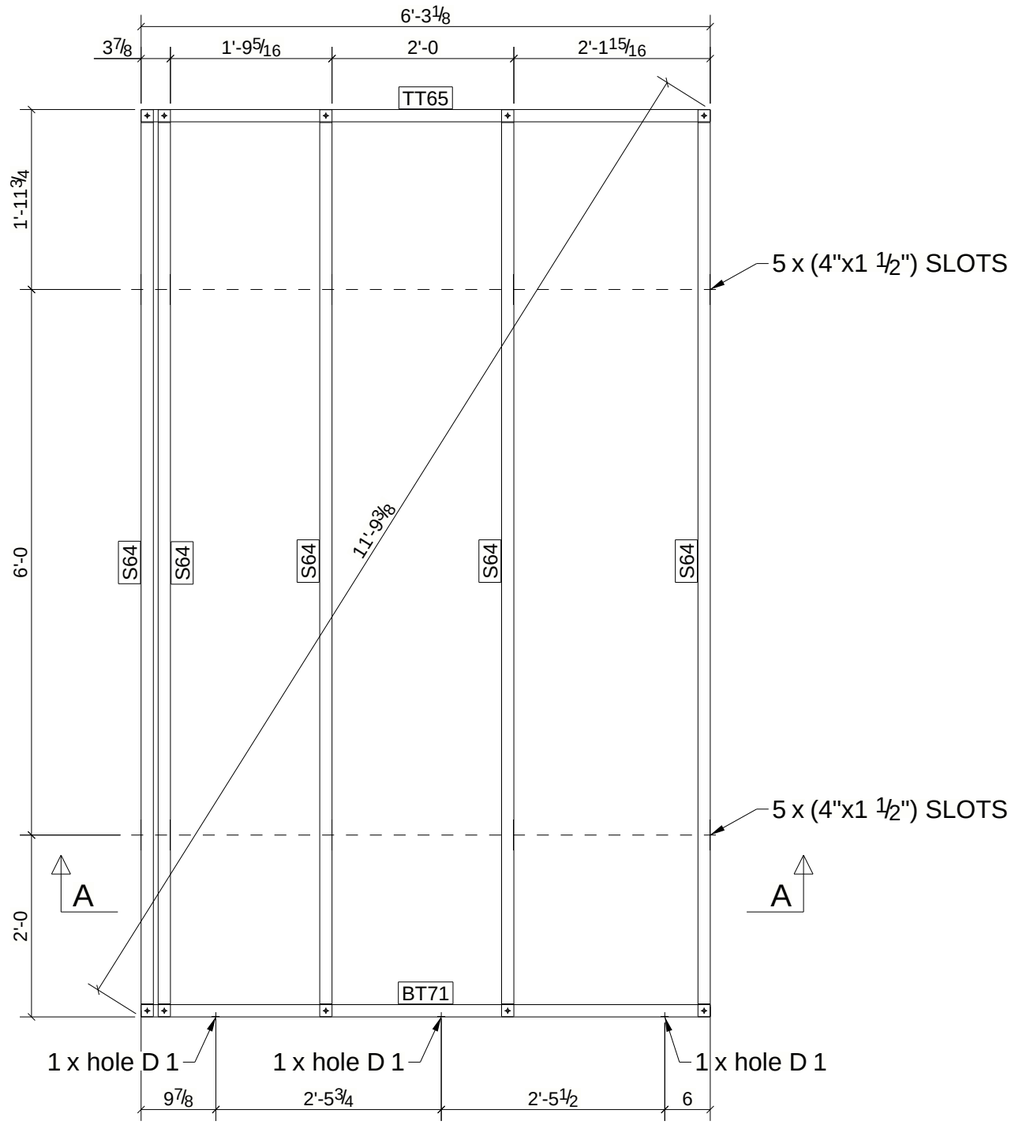


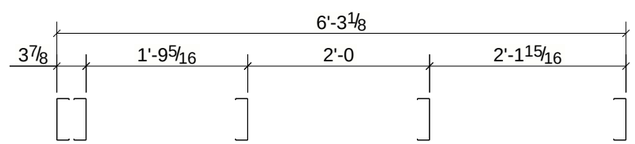


A - A

# BILL OF MATERIAL

| MARK | QTY | DESCRIPTION | LENGTH | WEIGHT | REMARKS |
|---|---|---|---|---|---|
| N31 | 1 | NON-LOAD BEARING WALL | | | SQ-2 |
| S64 | 1 | 550S162-27 | 9'-11 11/16" | 8.49 | A653-GR.50 |
| BT71 | 1 | 550S162-27 | 6'-3 1/8" | 5.33 | A653-GR.50 |
| S64 | 4 | 550S162-27 | 9'-11 11/16" | 33.95 | A653-GR.50 |
| TT65 | 1 | 550S162-27 | 6'-3 1/8" | 5.33 | A653-GR.50 |
| | | TOTAL WEIGHT THIS DRAWING | | 53 | |

| REV | DESCRIPTION | DATE |
|---|---|---|
| | | |

| | | | |
|---|---|---|---|
| DESCRIPTION | | | |
| PROJECT NAME | | | |
| DRAWN BY | VN | JOB No. | DRG No. |
| DATE DRAWN | 07/19/2024 | | N31 |

Tekla structures

FRONT VIEW

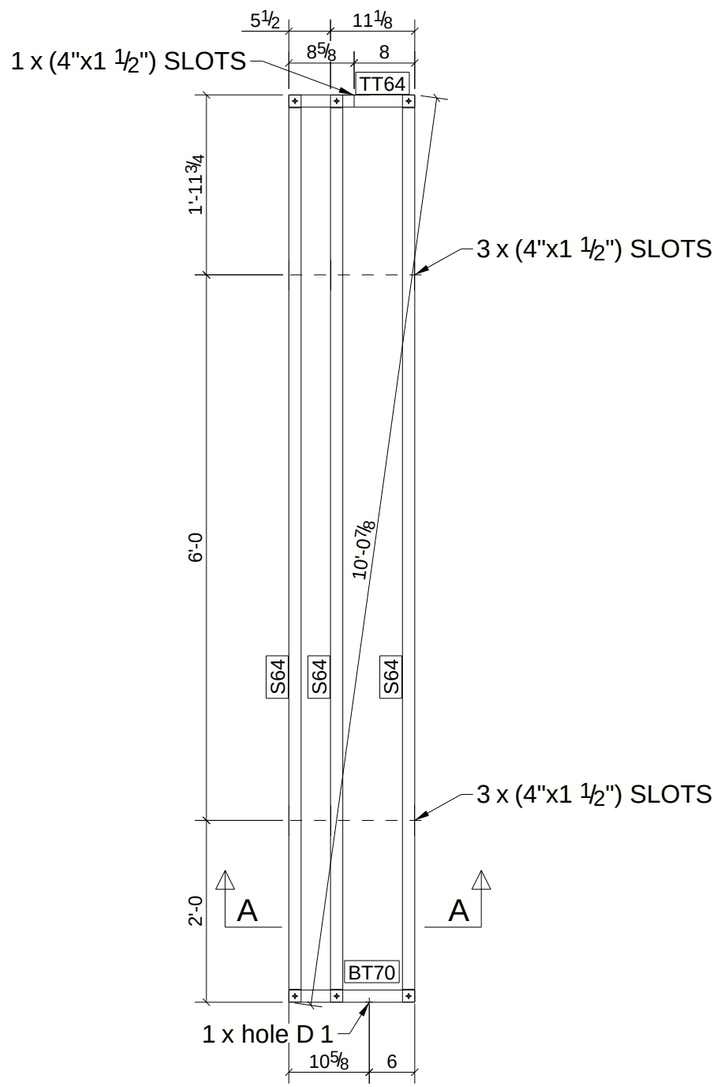


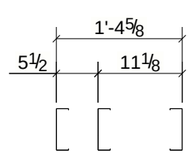


A - A

# BILL OF MATERIAL

| MARK | QTY | DESCRIPTION | LENGTH | WEIGHT | REMARKS |
|---|---|---|---|---|---|
| N32 | 1 | NON-LOAD BEARING WALL | | | SQ-2 |
| S64 | 1 | 550S162-27 | 9'-11 11/16" | 8.49 | A653-GR.50 |
| BT70 | 1 | 550S162-27 | 1'-4 5/8" | 1.18 | A653-GR.50 |
| S64 | 2 | 550S162-27 | 9'-11 11/16" | 16.97 | A653-GR.50 |
| TT64 | 1 | 550S162-27 | 1'-4 5/8" | 1.18 | A653-GR.50 |
| | | TOTAL WEIGHT THIS DRAWING | | 28 | |

| REV | DESCRIPTION | DATE |
|---|---|---|
| | | |

| | | | |
|---|---|---|---|
| DESCRIPTION | | | |
| PROJECT NAME | | | |
| DRAWN BY | VN | JOB No. | DRG No. |
| DATE DRAWN | 07/19/2024 | | N32 |

Tekla structures

# BILL OF MATERIAL

| MARK | QTY | DESCRIPTION | LENGTH | WEIGHT | REMARKS |
|---|---|---|---|---|---|
| N33 | 1 | NON-LOAD BEARING WALL | | | SQ-2 |
| S258 | 1 | 350S162-33 | 9'-11 13/16" | 8.77 | A653-GR.50 |
| BT115 | 1 | 350S162-33 | 7'-11 3/4" | 7.01 | A653-GR.50 |
| S258 | 4 | 350S162-33 | 9'-11 13/16" | 35.07 | A653-GR.50 |
| TT98 | 1 | 350S162-33 | 7'-11 3/4" | 7.01 | A653-GR.50 |
| | | TOTAL WEIGHT THIS DRAWING | | 58 | |

FRONT VIEW

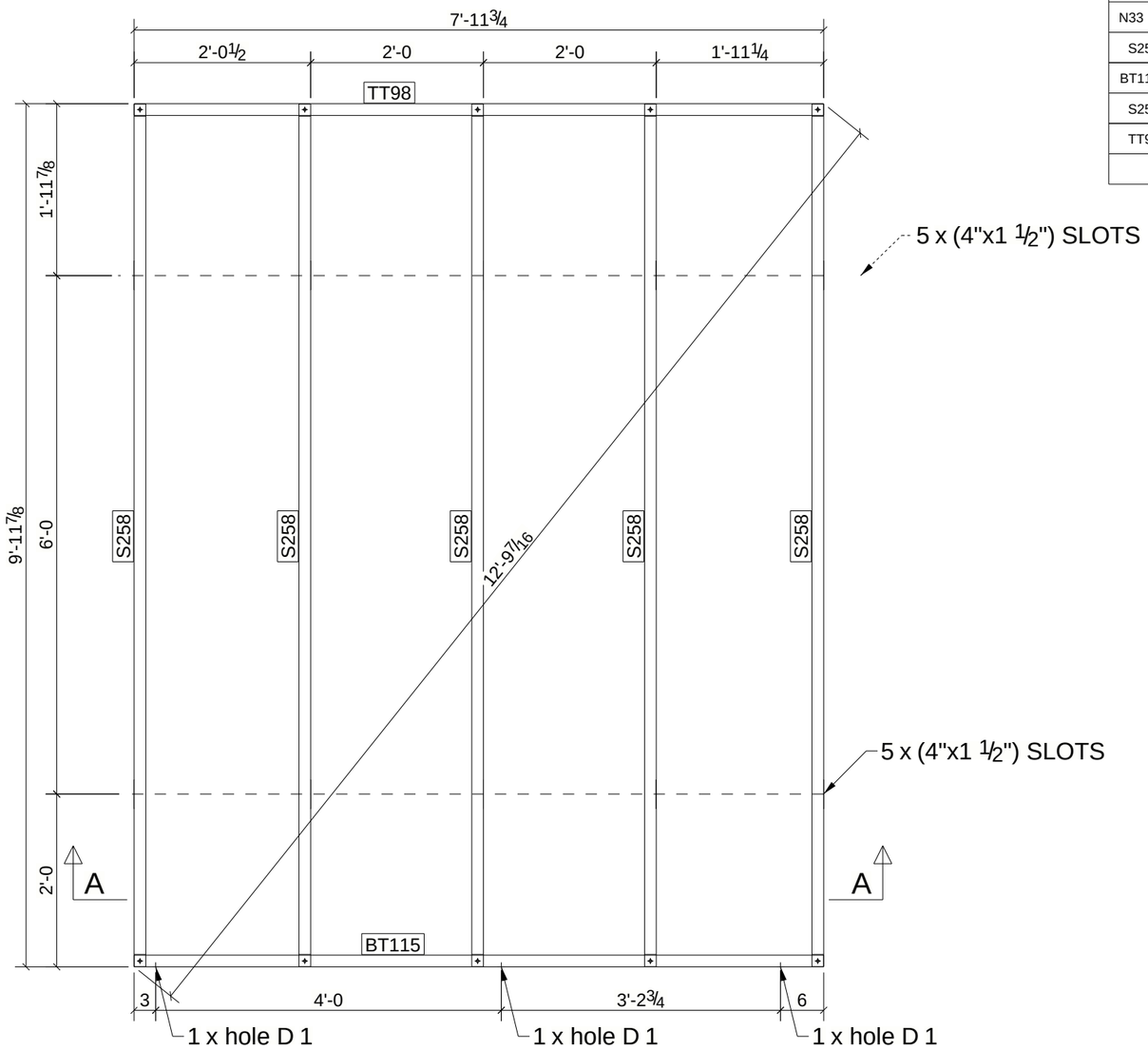


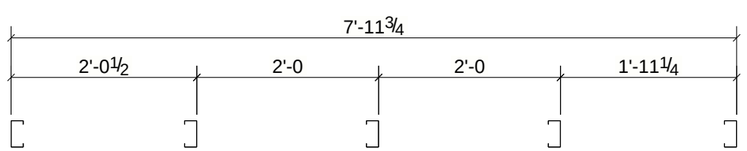


A - A

| REV | DESCRIPTION | DATE |
|---|---|---|
| | | |

| | | | |
|---|---|---|---|
| DESCRIPTION | | | |
| PROJECT NAME | | | |
| DRAWN BY | VN | JOB No. | DRG No. |
| DATE DRAWN | 07/19/2024 | | N33 |

Tekla structures

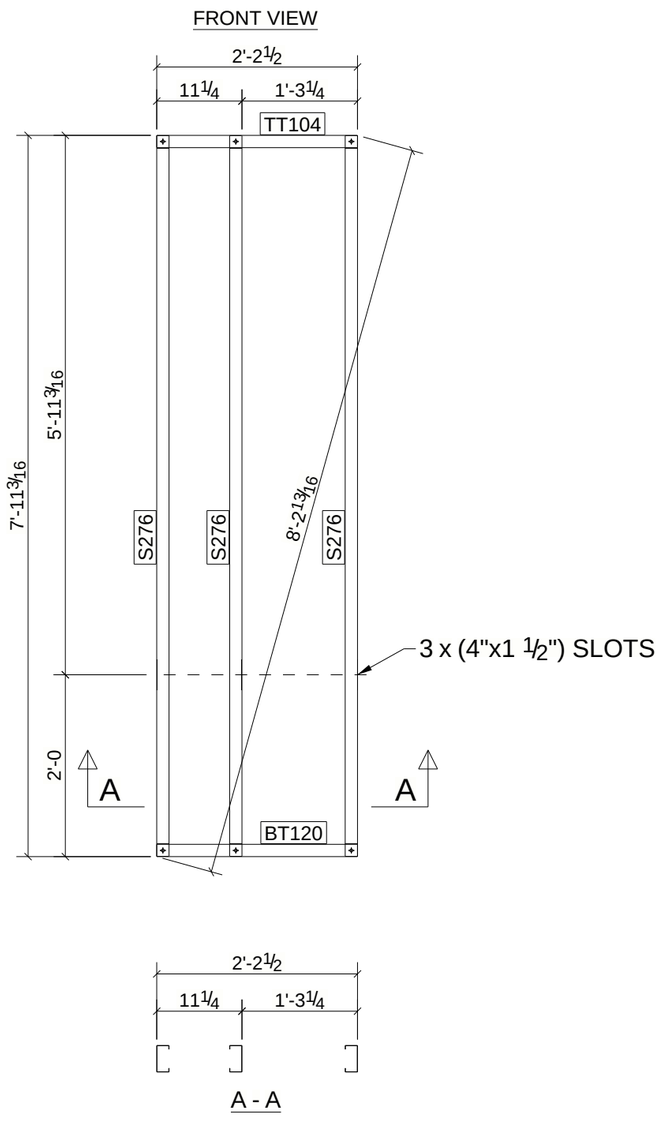


# BILL OF MATERIAL

| MARK | QTY | DESCRIPTION | LENGTH | WEIGHT | REMARKS |
|---|---|---|---|---|---|
| N34 | 1 | NON-LOAD BEARING WALL | | | SQ-2 |
| S276 | 1 | 350S162-33 | 7'-11 1/8" | 6.96 | A653-GR.50 |
| BT120 | 1 | 350S162-33 | 2'-2 1/2" | 1.94 | A653-GR.50 |
| S276 | 2 | 350S162-33 | 7'-11 1/8" | 13.92 | A653-GR.50 |
| TT104 | 1 | 350S162-33 | 2'-2 1/2" | 1.94 | A653-GR.50 |
| | | TOTAL WEIGHT THIS DRAWING | | 25 | |

| REV | DESCRIPTION | DATE |
|---|---|---|
| | | |

| | | | |
|---|---|---|---|
| DESCRIPTION | | | |
| PROJECT NAME | | | |
| DRAWN BY | VN | JOB No. | DRG No. |
| DATE DRAWN | 07/16/2024 | | N34 |

Tekla structures

FRONT VIEW

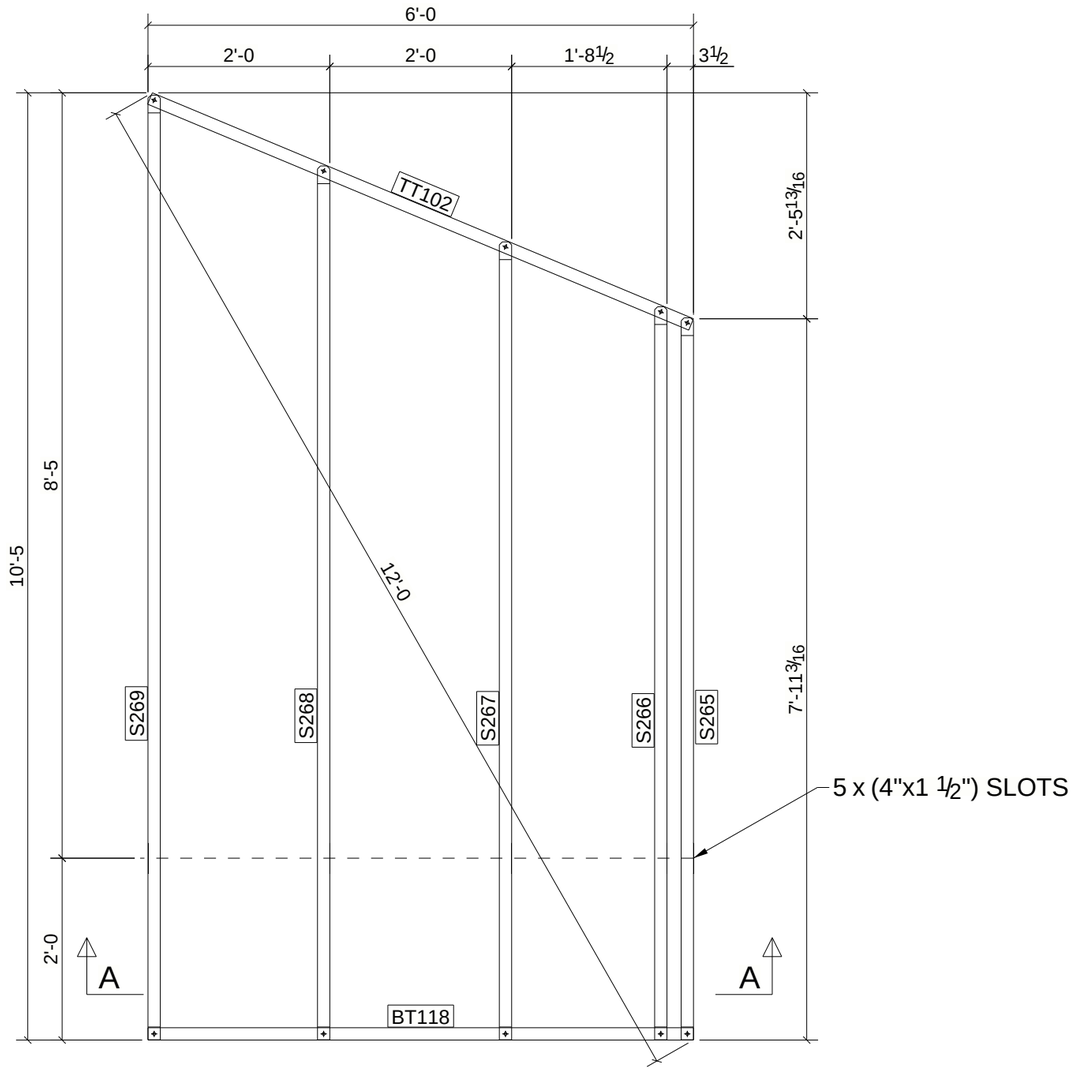


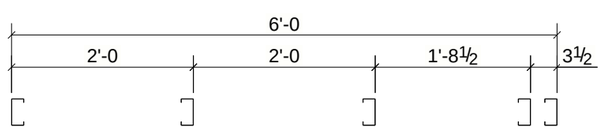


A - A

# BILL OF MATERIAL

| MARK | QTY | DESCRIPTION | LENGTH | WEIGHT | REMARKS |
|---|---|---|---|---|---|
| N35 | 1 | NON-LOAD BEARING WALL | | | SQ-2 |
| S269 | 1 | 350S162-33 | 10'-4 11/16" | 9.12 | A653-GR.50 |
| BT118 | 1 | 350S162-33 | 6'-0" | 5.27 | A653-GR.50 |
| S265 | 1 | 350S162-33 | 7'-11 5/16" | 6.97 | A653-GR.50 |
| S266 | 1 | 350S162-33 | 8'-0 3/4" | 7.08 | A653-GR.50 |
| S267 | 1 | 350S162-33 | 8'-9 5/16" | 7.70 | A653-GR.50 |
| S268 | 1 | 350S162-33 | 9'-7 5/16" | 8.44 | A653-GR.50 |
| TT102 | 1 | 350S162-33 | 6'-5 3/8" | 5.66 | A653-GR.50 |
| | | TOTAL WEIGHT THIS DRAWING | | 50 | |

| REV | DESCRIPTION | DATE |
|---|---|---|
| | | |

| | | | |
|---|---|---|---|
| DESCRIPTION | | | |
| PROJECT NAME | | | |
| DRAWN BY | VN | JOB No. | DRG No. |
| DATE DRAWN | 07/16/2024 | | N35 |

Tekla structures

FRONT VIEW

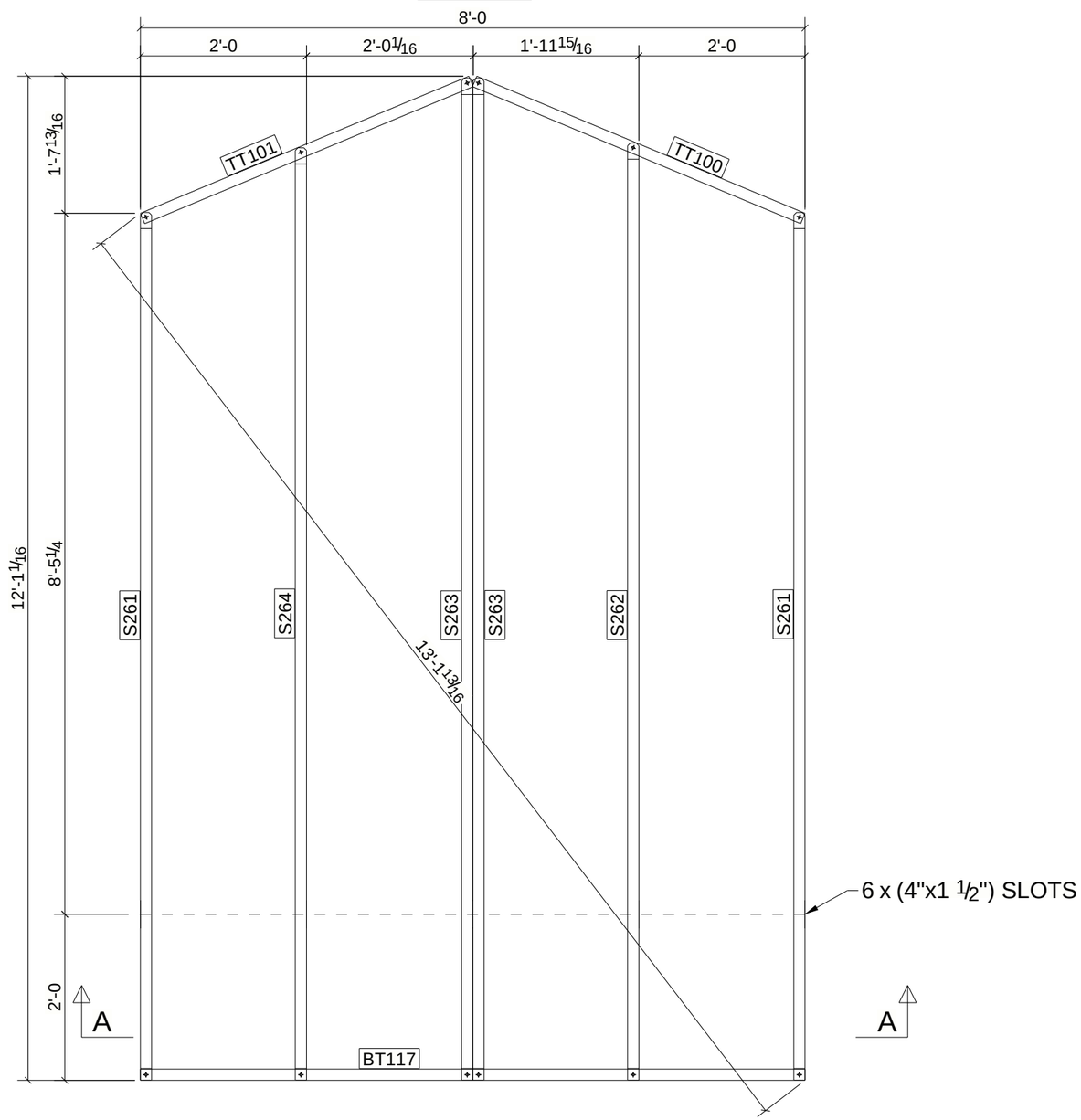


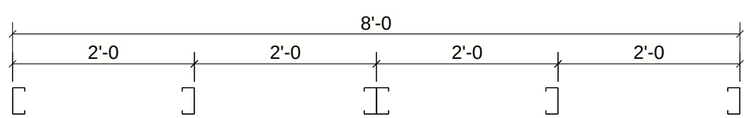


A - A

# BILL OF MATERIAL

| MARK | QTY | DESCRIPTION | LENGTH | WEIGHT | REMARKS |
|---|---|---|---|---|---|
| N36 | 1 | NON-LOAD BEARING WALL | | | SQ-2 |
| S263 | 1 | 350S162-33 | 12'-0 3/4" | 10.59 | A653-GR.50 |
| BT117 | 1 | 350S162-33 | 8'-0" | 7.02 | A653-GR.50 |
| S261 | 2 | 350S162-33 | 10'-5 3/8" | 18.34 | A653-GR.50 |
| S262 | 1 | 350S162-33 | 11'-3 3/8" | 9.91 | A653-GR.50 |
| S263 | 1 | 350S162-33 | 12'-0 3/4" | 10.59 | A653-GR.50 |
| S264 | 1 | 350S162-33 | 11'-2 11/16" | 9.86 | A653-GR.50 |
| TT100 | 1 | 350S162-33 | 4'-3 3/8" | 3.76 | A653-GR.50 |
| TT101 | 1 | 350S162-33 | 4'-3 7/16" | 3.76 | A653-GR.50 |
| | | TOTAL WEIGHT THIS DRAWING | | 74 | |

| REV | DESCRIPTION | DATE |
|---|---|---|
| | | |

| | | | |
|---|---|---|---|
| DESCRIPTION | | | |
| PROJECT NAME | | | |
| DRAWN BY | VN | JOB No. | DRG No. |
| DATE DRAWN | 07/16/2024 | | N36 |

Tekla structures

FRONT VIEW

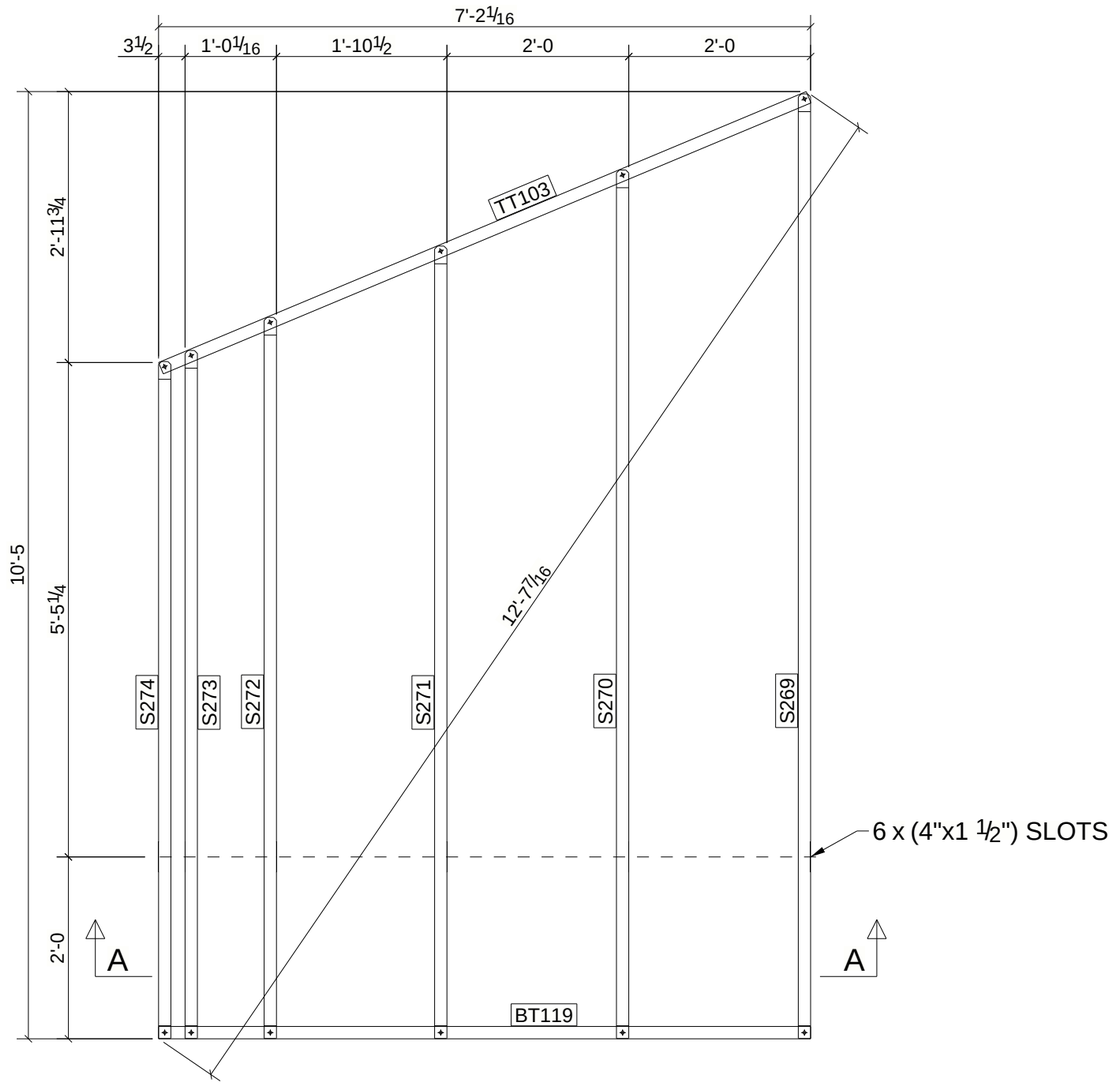


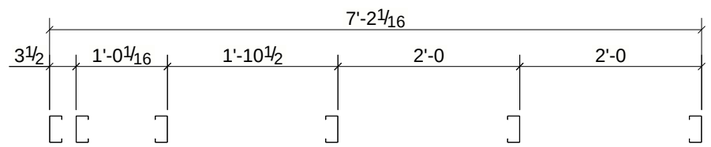


A - A

# BILL OF MATERIAL

| MARK | QTY | DESCRIPTION | LENGTH | WEIGHT | REMARKS |
|---|---|---|---|---|---|
| N37 | 1 | NON-LOAD BEARING WALL | | | SQ-2 |
| S269 | 1 | 350S162-33 | 10'-4 11/16" | 9.12 | A653-GR.50 |
| BT119 | 1 | 350S162-33 | 7'-2 1/16" | 6.30 | A653-GR.50 |
| S270 | 1 | 350S162-33 | 9'-6 5/8" | 8.39 | A653-GR.50 |
| S271 | 1 | 350S162-33 | 8'-8 9/16" | 7.65 | A653-GR.50 |
| S272 | 1 | 350S162-33 | 7'-11 3/16" | 6.96 | A653-GR.50 |
| S273 | 1 | 350S162-33 | 7'-6 13/16" | 6.64 | A653-GR.50 |
| S274 | 1 | 350S162-33 | 7'-5 3/8" | 6.54 | A653-GR.50 |
| TT103 | 1 | 350S162-33 | 7'-8 11/16" | 6.78 | A653-GR.50 |
| | | TOTAL WEIGHT THIS DRAWING | | 58 | |

| REV | DESCRIPTION | DATE |
|---|---|---|
| | | |

| | | | |
|---|---|---|---|
| DESCRIPTION | | | |
| PROJECT NAME | | | |
| DRAWN BY | VN | JOB No. | DRG No. |
| DATE DRAWN | 07/16/2024 | | N37 |

Tekla structures

# BILL OF MATERIAL

| MARK | QTY | DESCRIPTION | LENGTH | WEIGHT | REMARKS |
|---|---|---|---|---|---|
| N38 | 1 | NON-LOAD BEARING WALL | | | SQ-2 |
| S278 | 1 | 350S162-33 | 7'-5 3/16" | 6.53 | A653-GR.50 |
| BT120 | 1 | 350S162-33 | 2'-2 1/2" | 1.94 | A653-GR.50 |
| S278 | 2 | 350S162-33 | 7'-5 3/16" | 13.05 | A653-GR.50 |
| TT104 | 1 | 350S162-33 | 2'-2 1/2" | 1.94 | A653-GR.50 |
| | | TOTAL WEIGHT THIS DRAWING | | 23 | |

FRONT VIEW

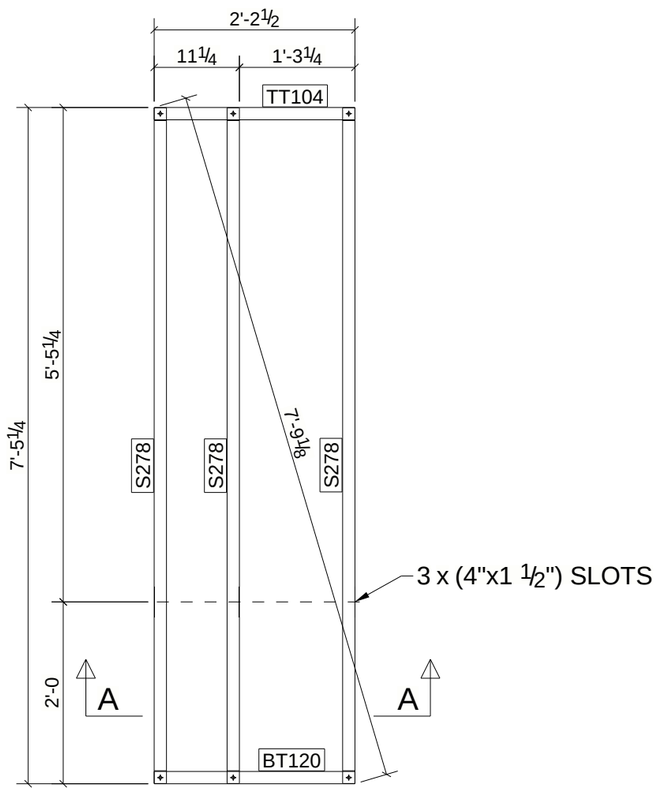


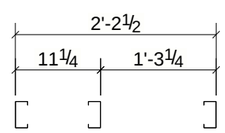


A - A

| REV | DESCRIPTION | DATE |
|---|---|---|
| | | |

| | | | |
|---|---|---|---|
| DESCRIPTION | | | |
| PROJECT NAME | | | |
| DRAWN BY | VN | JOB No. | DRG No. |
| DATE DRAWN | 07/16/2024 | | N38 |

Tekla structures

FRONT VIEW

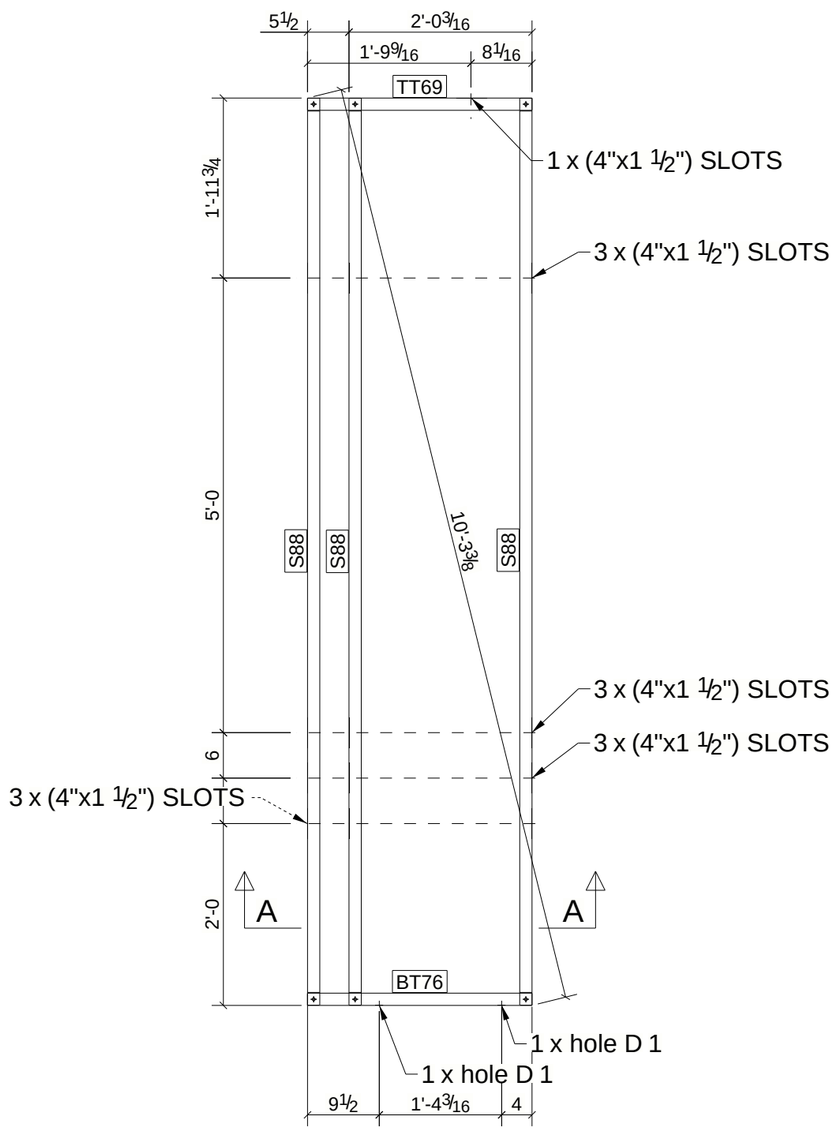


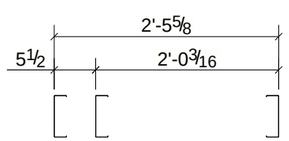


A - A

# BILL OF MATERIAL

| MARK | QTY | DESCRIPTION | LENGTH | WEIGHT | REMARKS |
|---|---|---|---|---|---|
| N39 | 1 | NON-LOAD BEARING WALL | | | SQ-2 |
| S88 | 1 | 550S162-27 | 9'-11 11/16" | 8.49 | A653-GR.50 |
| BT76 | 1 | 550S162-27 | 2'-5 5/8" | 2.10 | A653-GR.50 |
| S88 | 2 | 550S162-27 | 9'-11 11/16" | 16.97 | A653-GR.50 |
| TT69 | 1 | 550S162-27 | 2'-5 5/8" | 2.10 | A653-GR.50 |
| | | TOTAL WEIGHT THIS DRAWING | | 30 | |

| REV | DESCRIPTION | DATE |
|---|---|---|
| | | |

| | | | |
|---|---|---|---|
| DESCRIPTION | | | |
| PROJECT NAME | | | |
| DRAWN BY | VN | JOB No. | DRG No. |
| DATE DRAWN | 07/19/2024 | | N39 |

Tekla structures

FRONT VIEW

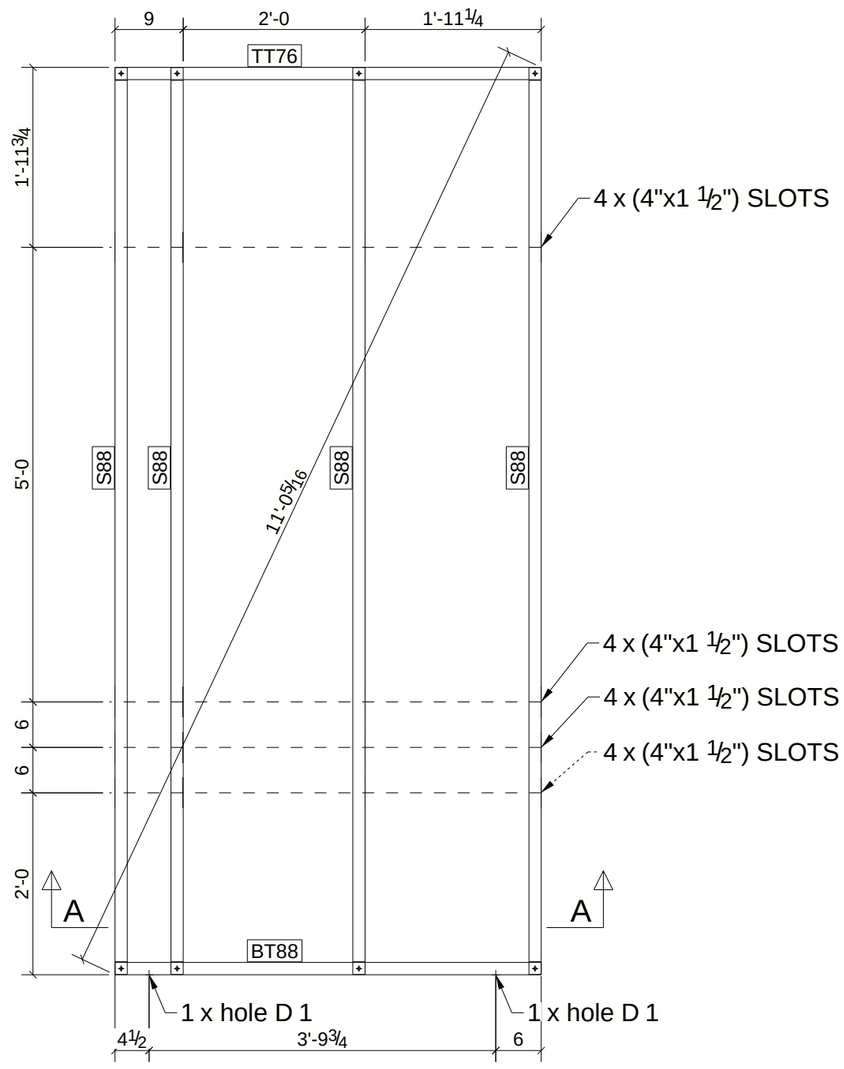


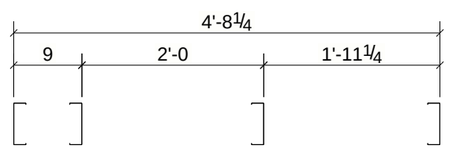


A - A

# BILL OF MATERIAL

| MARK | QTY | DESCRIPTION | LENGTH | WEIGHT | REMARKS |
|---|---|---|---|---|---|
| N40 | 1 | NON-LOAD BEARING WALL | | | SQ-2 |
| S88 | 1 | 550S162-27 | 9'-11 11/16" | 8.49 | A653-GR.50 |
| BT88 | 1 | 550S162-27 | 4'-8 1/4" | 3.99 | A653-GR.50 |
| S88 | 3 | 550S162-27 | 9'-11 11/16" | 25.46 | A653-GR.50 |
| TT76 | 1 | 550S162-27 | 4'-8 1/4" | 3.99 | A653-GR.50 |
| | | TOTAL WEIGHT THIS DRAWING | | 42 | |

| REV | DESCRIPTION | DATE |
|---|---|---|
| | | |

| | | | |
|---|---|---|---|
| DESCRIPTION | | | |
| PROJECT NAME | | | |
| DRAWN BY | VN | JOB No. | DRG No. |
| DATE DRAWN | 07/19/2024 | | N40 |

Tekla structures

FRONT VIEW

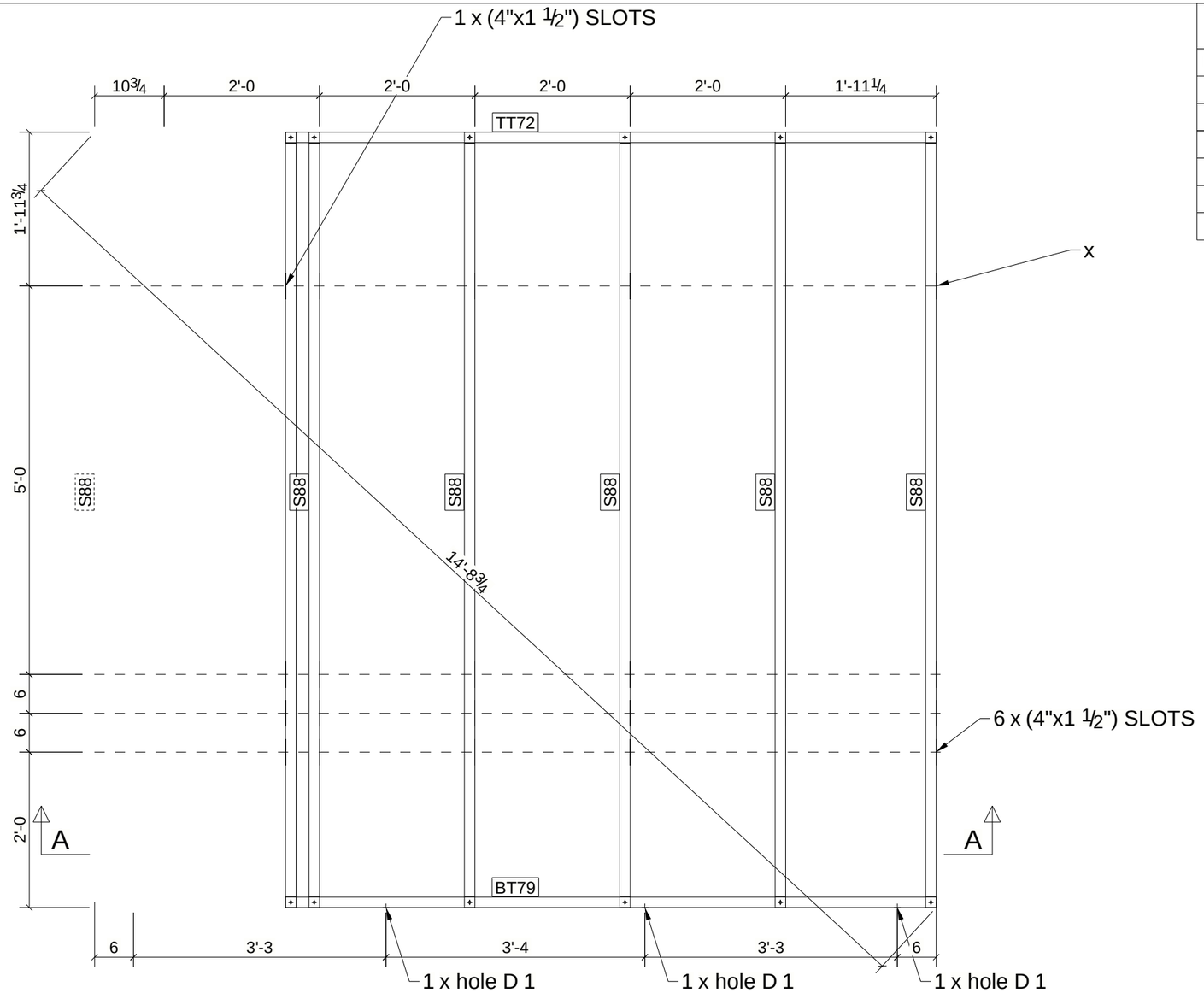


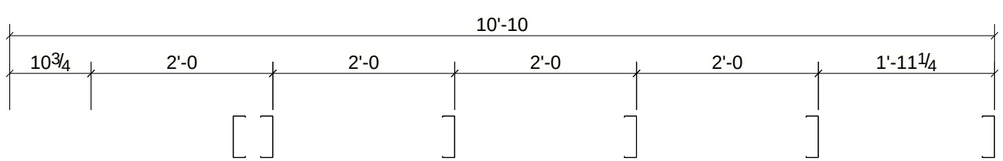


A - A

# BILL OF MATERIAL

| MARK | QTY | DESCRIPTION | LENGTH | WEIGHT | REMARKS |
|---|---|---|---|---|---|
| N41 | 1 | NON-LOAD BEARING WALL | | | SQ-2 |
| S88 | 1 | 550S162-27 | 9'-11 11/16" | 8.49 | A653-GR.50 |
| BT79 | 1 | 550S162-27 | 8'-4 1/2" | 7.12 | A653-GR.50 |
| S88 | 5 | 550S162-27 | 9'-11 11/16" | 42.43 | A653-GR.50 |
| TT72 | 1 | 550S162-27 | 8'-4 1/2" | 7.12 | A653-GR.50 |
| | | TOTAL WEIGHT THIS DRAWING | | 65 | |

| REV | DESCRIPTION | DATE |
|---|---|---|
| | | |

| | | | |
|---|---|---|---|
| DESCRIPTION | | | |
| PROJECT NAME | | | |
| DRAWN BY | VN | JOB No. | DRG No. |
| DATE DRAWN | 08/14/2024 | | N41 |

Tekla structures

# BILL OF MATERIAL

| MARK | QTY | DESCRIPTION | LENGTH | WEIGHT | REMARKS |
|---|---|---|---|---|---|
| N42 | 2 | NON-LOAD BEARING WALLS | | | SQ-2 |
| S319 | 2 | 350S162-43 | 3'-3 5/16" | 7.44 | A653-GR.50 |
| BT126 | 2 | 350S162-43 | 20'-0" | 45.47 | A653-GR.50 |
| S319 | 20 | 350S162-43 | 3'-3 5/16" | 74.43 | A653-GR.50 |
| TT119 | 2 | 350S162-43 | 20'-0" | 45.47 | A653-GR.50 |
| | | TOTAL WEIGHT THIS DRAWING | | 173 | |

FRONT VIEW

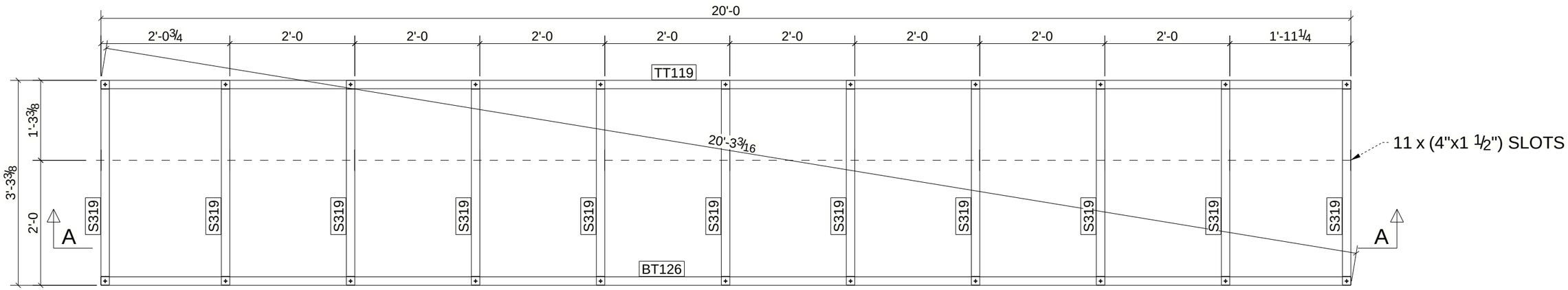


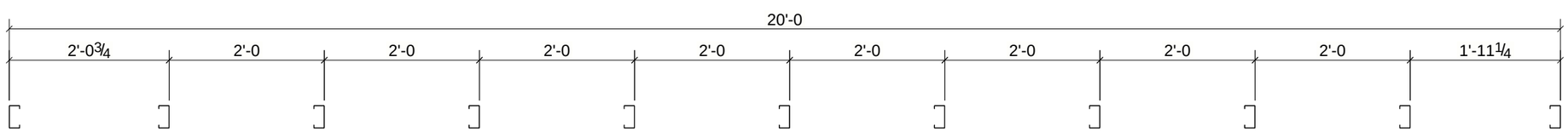


A - A

| REV | DESCRIPTION | DATE |
|---|---|---|
| | | |

| | | | |
|---|---|---|---|
| DESCRIPTION | | | |
| PROJECT NAME | | | |
| DRAWN BY | VN | JOB No. | DRG No. |
| DATE DRAWN | 07/18/2024 | | N42 |

Tekla structures

# BILL OF MATERIAL

| MARK | QTY | DESCRIPTION | LENGTH | WEIGHT | REMARKS |
|---|---|---|---|---|---|
| N43 | 1 | NON-LOAD BEARING WALL | | | SQ-2 |
| S319 | 1 | 350S162-43 | 3'-3 5/16" | 3.72 | A653-GR.50 |
| BT127 | 1 | 350S162-43 | 4'-10 1/2" | 5.54 | A653-GR.50 |
| S319 | 3 | 350S162-43 | 3'-3 5/16" | 11.16 | A653-GR.50 |
| TT120 | 1 | 350S162-43 | 4'-10 1/2" | 5.54 | A653-GR.50 |
| | | TOTAL WEIGHT THIS DRAWING | | 26 | |

FRONT VIEW

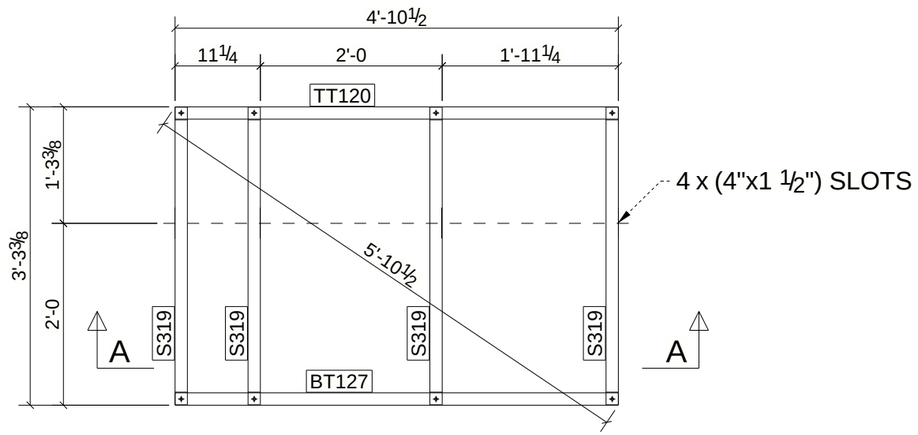


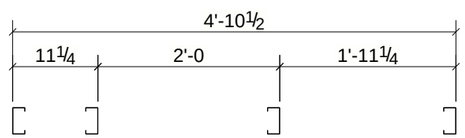


A - A

| REV | DESCRIPTION | DATE |
|---|---|---|
| | | |

| | | | |
|---|---|---|---|
| DESCRIPTION | | | |
| PROJECT NAME | | | |
| DRAWN BY | VN | JOB No. | DRG No. |
| DATE DRAWN | 07/18/2024 | | N43 |

Tekla structures

# BILL OF MATERIAL

| MARK | QTY | DESCRIPTION | LENGTH | WEIGHT | REMARKS |
|---|---|---|---|---|---|
| N44 | 1 | NON-LOAD BEARING WALL | | | SQ-2 |
| S325 | 1 | 350S162-43 | 1'-2 5/16" | 1.35 | A653-GR.50 |
| BT148 | 1 | 350S162-43 | 4'-3 3/4" | 4.90 | A653-GR.50 |
| S325 | 3 | 350S162-43 | 1'-2 5/16" | 4.06 | A653-GR.50 |
| TT123 | 1 | 350S162-43 | 4'-3 3/4" | 4.90 | A653-GR.50 |
| | | TOTAL WEIGHT THIS DRAWING | | 15 | |

FRONT VIEW

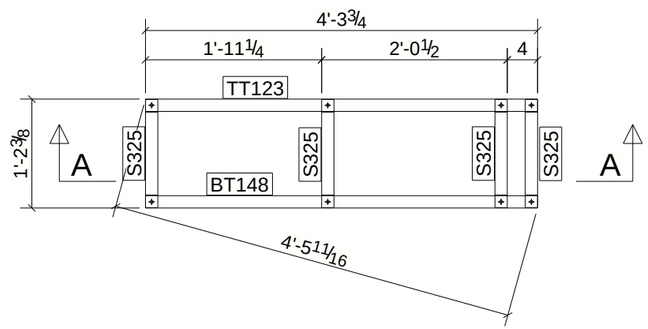


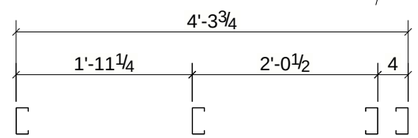


A - A

| REV | DESCRIPTION | DATE |
|---|---|---|
| | | |

| | | | |
|---|---|---|---|
| DESCRIPTION | | | |
| PROJECT NAME | | | |
| DRAWN BY | VN | JOB No. | DRG No. |
| DATE DRAWN | 07/18/2024 | | N44 |

Tekla structures

# BILL OF MATERIAL

| MARK | QTY | DESCRIPTION | LENGTH | WEIGHT | REMARKS |
|---|---|---|---|---|---|
| N45 | 1 | NON-LOAD BEARING WALL | | | SQ-2 |
| S88 | 1 | 550S162-27 | 9'-11 11/16" | 8.49 | A653-GR.50 |
| BT75 | 1 | 550S162-27 | 11'-6 3/4" | 9.84 | A653-GR.50 |
| S88 | 6 | 550S162-27 | 9'-11 11/16" | 50.92 | A653-GR.50 |
| TT68 | 1 | 550S162-27 | 11'-6 3/4" | 9.84 | A653-GR.50 |
| | | TOTAL WEIGHT THIS DRAWING | | 79 | |

FRONT VIEW

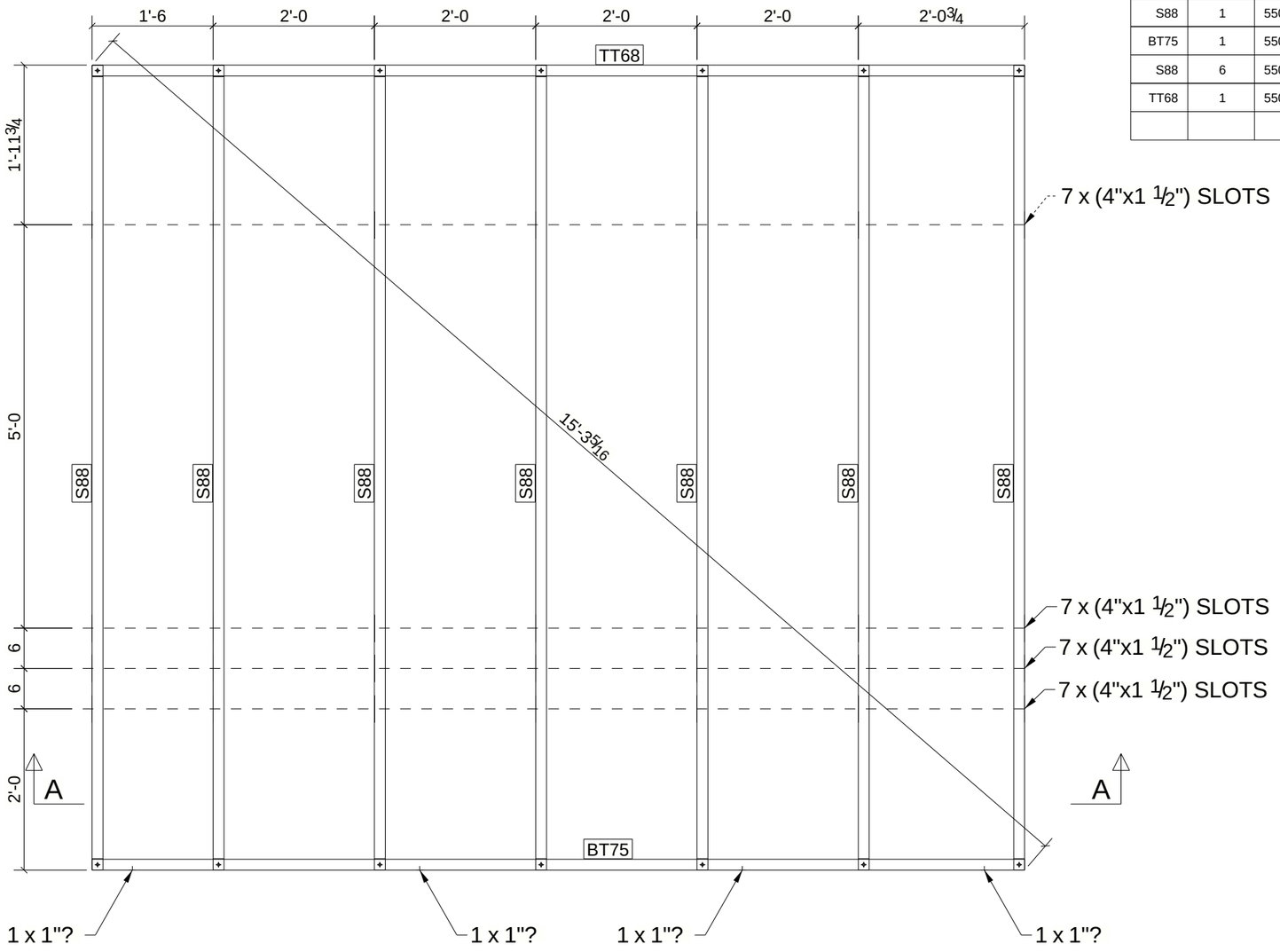


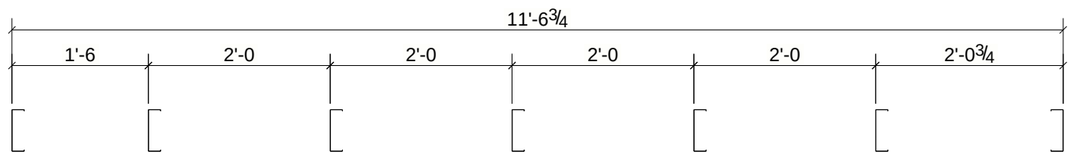


A - A

| REV | DESCRIPTION | DATE |
|---|---|---|
| | | |

| | | | |
|---|---|---|---|
| DESCRIPTION | | | |
| PROJECT NAME | | | |
| DRAWN BY | VN | JOB No. | DRG No. |
| DATE DRAWN | 07/19/2024 | | N45 |

Tekla structures

FRONT VIEW

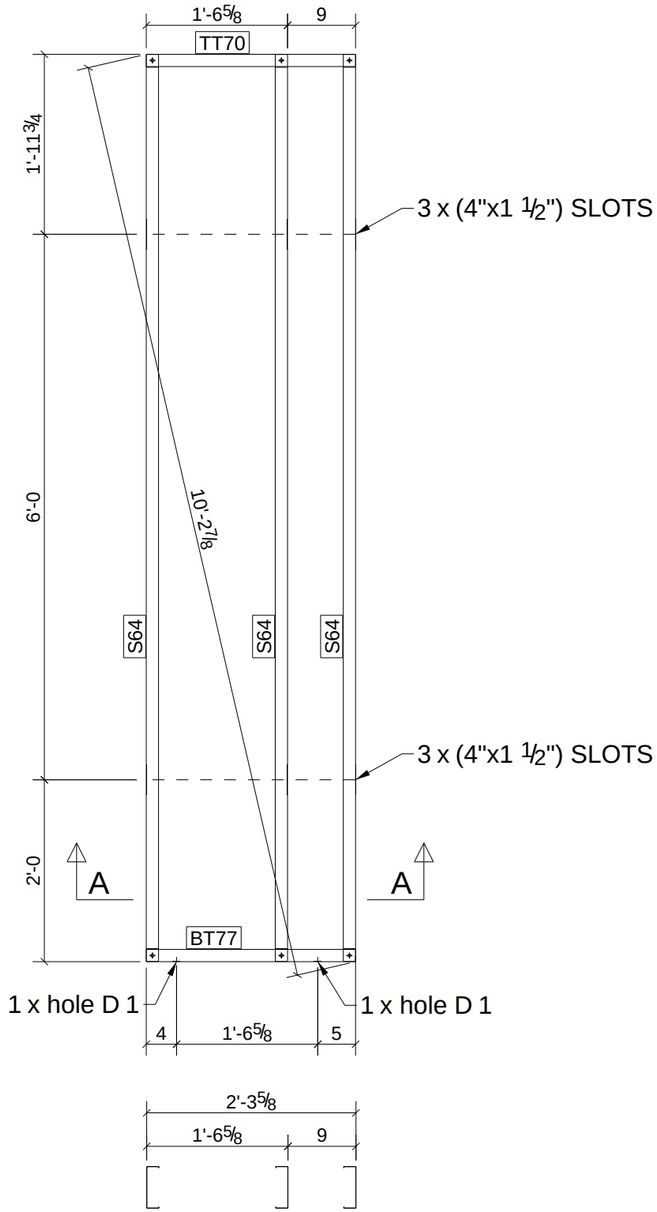


A - A

# BILL OF MATERIAL

| MARK | QTY | DESCRIPTION | LENGTH | WEIGHT | REMARKS |
|---|---|---|---|---|---|
| N46 | 1 | NON-LOAD BEARING WALL | | | SQ-2 |
| S64 | 1 | 550S162-27 | 9'-11 11/16" | 8.49 | A653-GR.50 |
| BT77 | 1 | 550S162-27 | 2'-3 5/8" | 1.96 | A653-GR.50 |
| S64 | 2 | 550S162-27 | 9'-11 11/16" | 16.97 | A653-GR.50 |
| TT70 | 1 | 550S162-27 | 2'-3 5/8" | 1.96 | A653-GR.50 |
| | | TOTAL WEIGHT THIS DRAWING | | 29 | |

| REV | DESCRIPTION | DATE |
|---|---|---|
| | | |

| | | | |
|---|---|---|---|
| DESCRIPTION | | | |
| PROJECT NAME | | | |
| DRAWN BY | VN | JOB No. | DRG No. |
| DATE DRAWN | 07/19/2024 | | N46 |

Tekla structures

FRONT VIEW

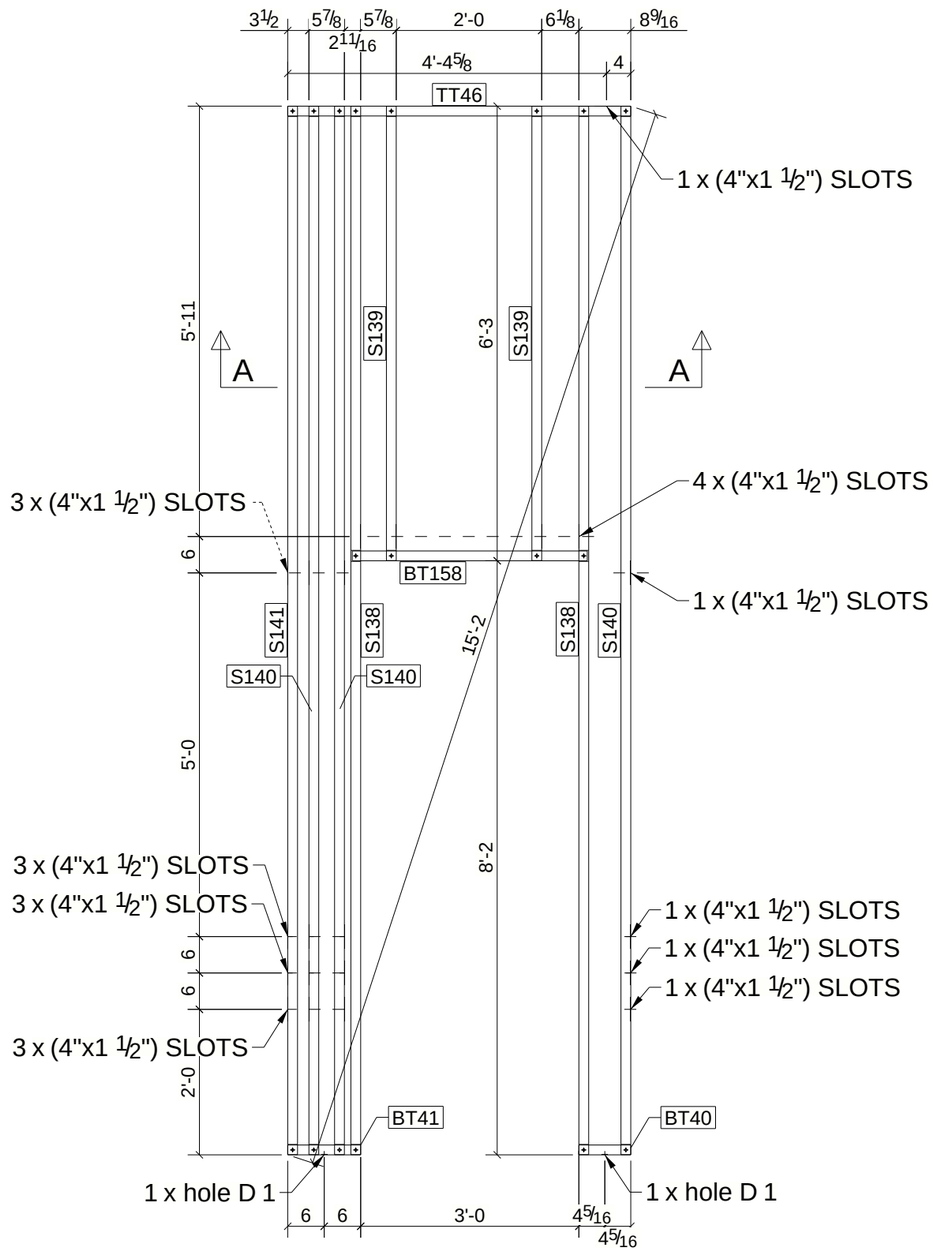


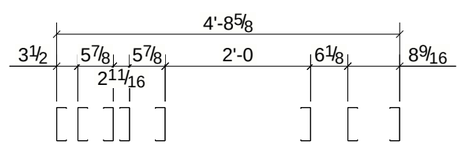


A - A

# BILL OF MATERIAL

| MARK | QTY | DESCRIPTION | LENGTH | WEIGHT | REMARKS |
|---|---|---|---|---|---|
| N47 | 1 | NON-LOAD BEARING WALL | | | SQ-2 |
| S140 | 1 | 550S162-27 | 14'-4 15/16" | 12.26 | A653-GR.50 |
| BT40 | 1 | 550S162-27 | 0'-8 9/16" | 0.61 | A653-GR.50 |
| BT41 | 1 | 550S162-27 | 1'-0 1/16" | 0.85 | A653-GR.50 |
| BT158 | 1 | 550S162-27 | 3'-2 3/4" | 2.75 | A653-GR.50 |
| S138 | 2 | 550S162-27 | 14'-4 15/16" | 24.52 | A653-GR.50 |
| S139 | 2 | 550S162-27 | 6'-2 15/16" | 10.63 | A653-GR.50 |
| S140 | 2 | 550S162-27 | 14'-4 15/16" | 24.52 | A653-GR.50 |
| S141 | 1 | 550S162-27 | 14'-4 15/16" | 12.26 | A653-GR.50 |
| TT46 | 1 | 550S162-27 | 4'-8 5/8" | 4.01 | A653-GR.50 |
| | | TOTAL WEIGHT THIS DRAWING | | 92 | |

| REV | DESCRIPTION | DATE |
|---|---|---|
| | | |

| | | | |
|---|---|---|---|
| DESCRIPTION | | | |
| PROJECT NAME | | | |
| DRAWN BY | VN | JOB No. | DRG No. |
| DATE DRAWN | 07/19/2024 | | N47 |

Tekla structures

FRONT VIEW

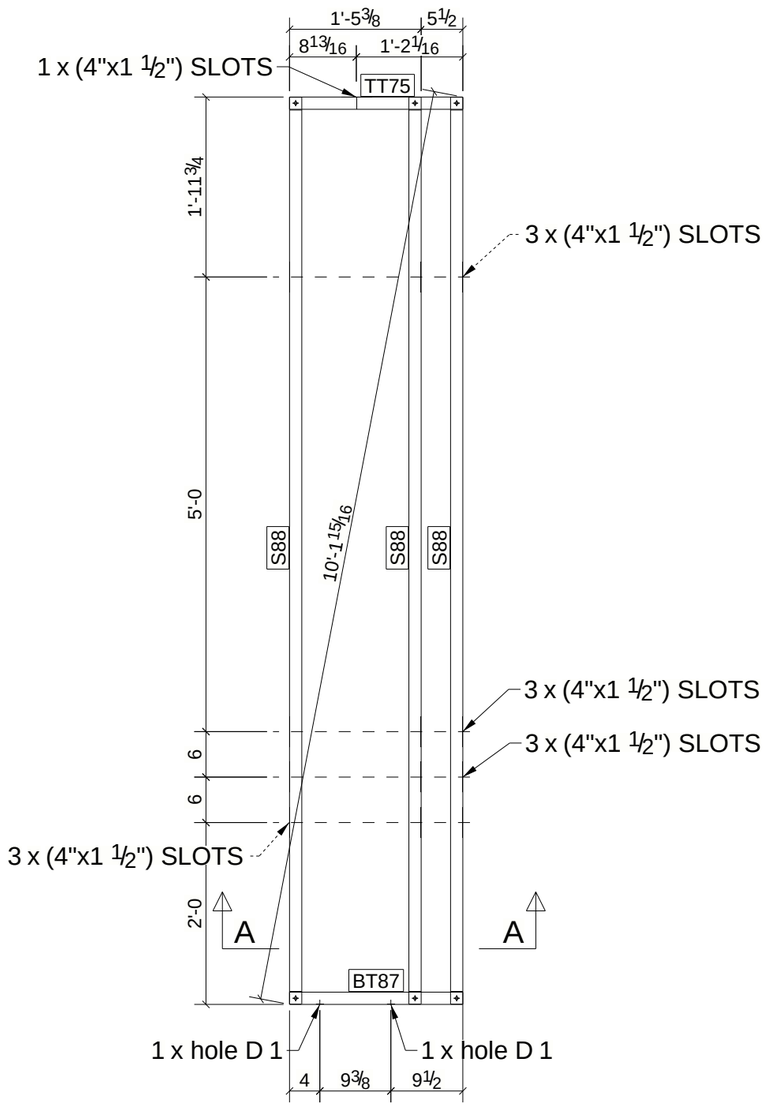


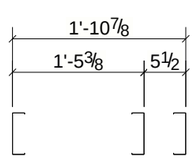


A - A

# BILL OF MATERIAL

| MARK | QTY | DESCRIPTION | LENGTH | WEIGHT | REMARKS |
|---|---|---|---|---|---|
| N48 | 1 | NON-LOAD BEARING WALL | | | SQ-2 |
| S88 | 1 | 550S162-27 | 9'-11 11/16" | 8.49 | A653-GR.50 |
| BT87 | 1 | 550S162-27 | 1'-10 7/8" | 1.62 | A653-GR.50 |
| S88 | 2 | 550S162-27 | 9'-11 11/16" | 16.97 | A653-GR.50 |
| TT75 | 1 | 550S162-27 | 1'-10 7/8" | 1.62 | A653-GR.50 |
| | | TOTAL WEIGHT THIS DRAWING | | 29 | |

| REV | DESCRIPTION | DATE |
|---|---|---|
| | | |

| | | | |
|---|---|---|---|
| DESCRIPTION | | | |
| PROJECT NAME | | | |
| DRAWN BY | VN | JOB No. | DRG No. |
| DATE DRAWN | 07/19/2024 | | N48 |

Tekla structures

FRONT VIEW

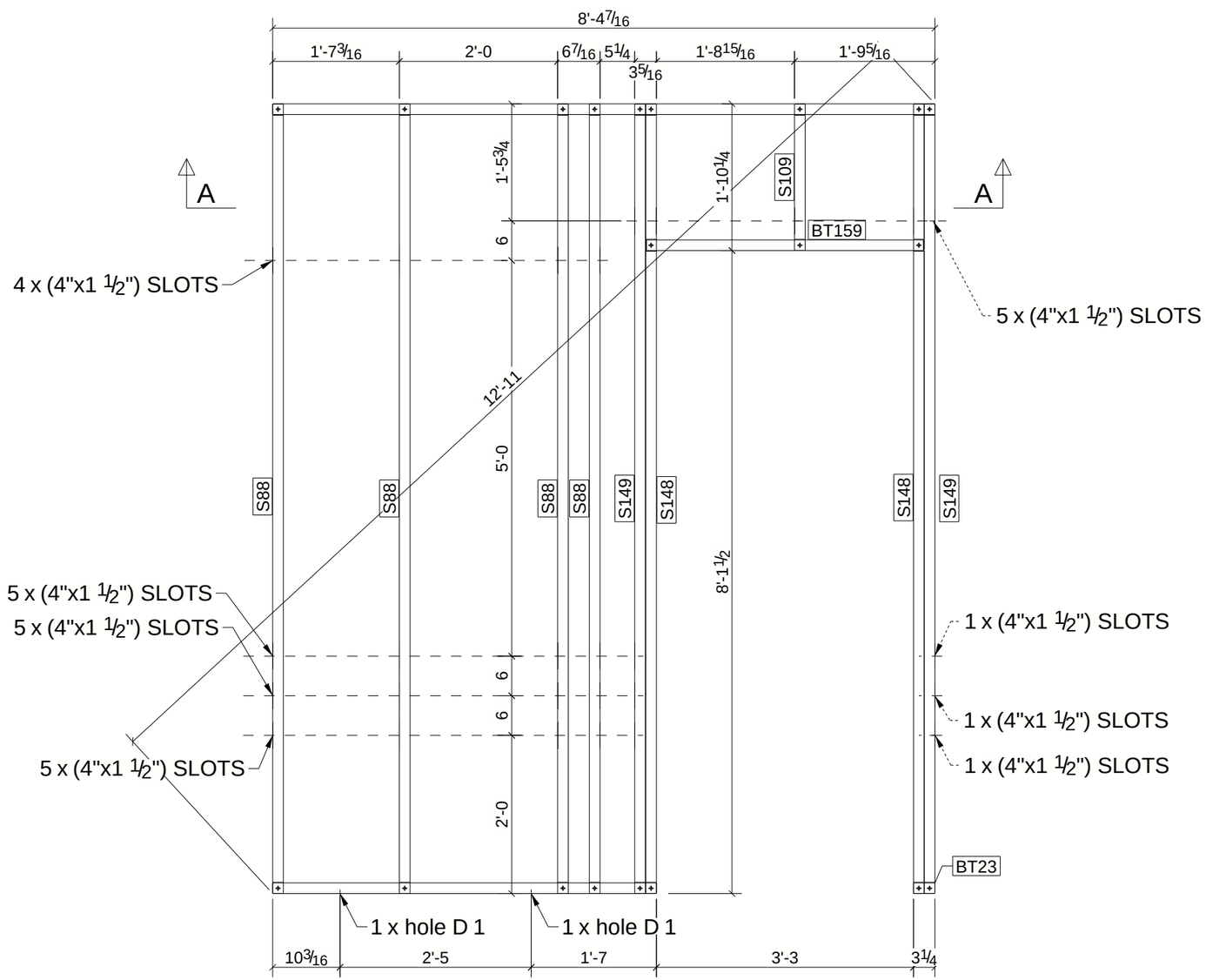


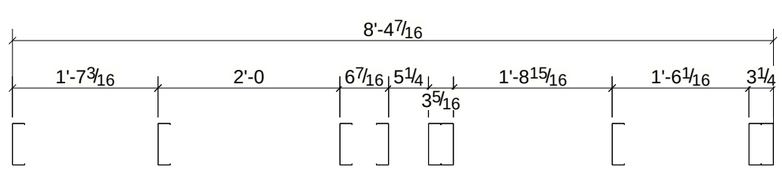


A - A

# BILL OF MATERIAL

| MARK | QTY | DESCRIPTION | LENGTH | WEIGHT | REMARKS |
|---|---|---|---|---|---|
| N49 | 1 | NON-LOAD BEARING WALL | | | SQ-2 |
| S88 | 1 | 550S162-27 | 9'-11 11/16" | 8.49 | A653-GR.50 |
| BT23 | 1 | 550S162-27 | 0'-3 1/4" | 0.23 | A653-GR.50 |
| BT159 | 1 | 550S162-27 | 3'-6" | 2.98 | A653-GR.50 |
| BT174 | 1 | 550S162-27 | 4'-10 3/16" | 4.13 | A653-GR.50 |
| S88 | 3 | 550S162-27 | 9'-11 11/16" | 25.46 | A653-GR.50 |
| S109 | 1 | 550S162-27 | 1'-10 3/16" | 1.57 | A653-GR.50 |
| S148 | 2 | 550S162-27 | 9'-11 11/16" | 16.97 | A653-GR.50 |
| S149 | 2 | 550S162-27 | 9'-11 11/16" | 16.97 | A653-GR.50 |
| TT19 | 1 | 550S162-27 | 8'-4 7/16" | 7.12 | A653-GR.50 |
| | | TOTAL WEIGHT THIS DRAWING | | 84 | |

| REV | DESCRIPTION | DATE |
|---|---|---|
| | | |

| | | | |
|---|---|---|---|
| DESCRIPTION | | | |
| PROJECT NAME | | | |
| DRAWN BY | VN | JOB No. | DRG No. |
| DATE DRAWN | 08/14/2024 | | N49 |

Tekla structures

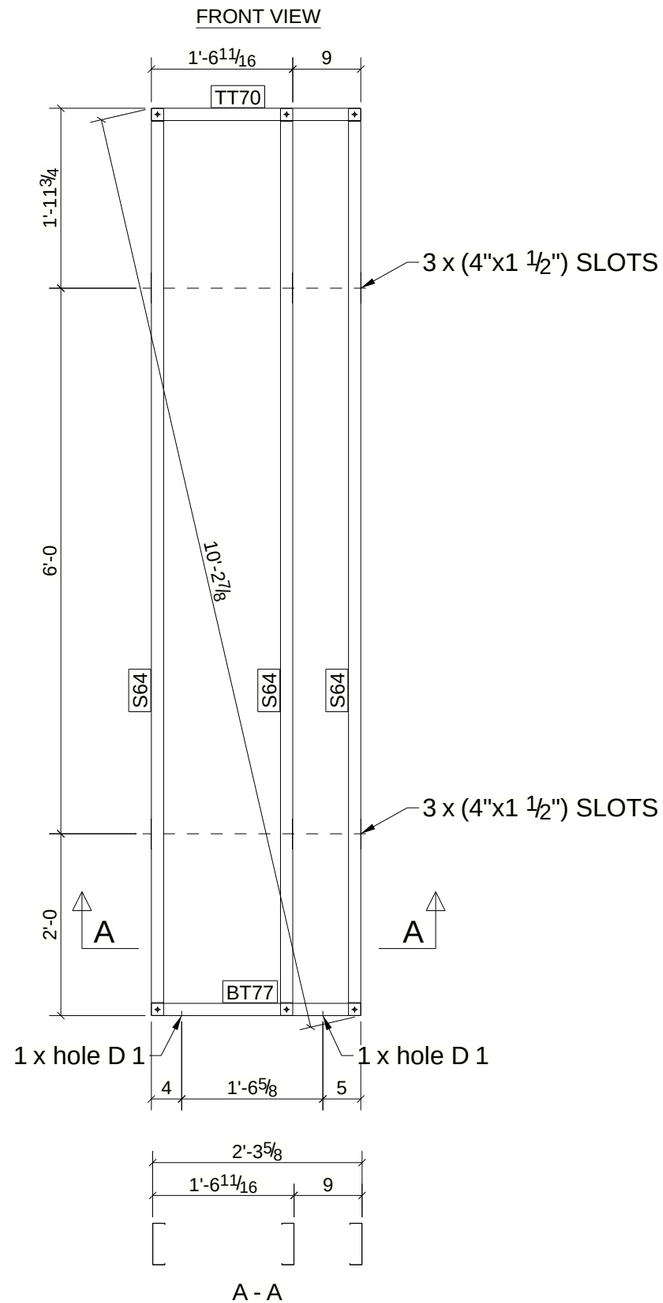


# BILL OF MATERIAL

| MARK | QTY | DESCRIPTION | LENGTH | WEIGHT | REMARKS |
|---|---|---|---|---|---|
| N50 | 1 | NON-LOAD BEARING WALL | | | SQ-2 |
| S64 | 1 | 550S162-27 | 9'-11 11/16" | 8.49 | A653-GR.50 |
| BT77 | 1 | 550S162-27 | 2'-3 5/8" | 1.96 | A653-GR.50 |
| S64 | 2 | 550S162-27 | 9'-11 11/16" | 16.97 | A653-GR.50 |
| TT70 | 1 | 550S162-27 | 2'-3 5/8" | 1.96 | A653-GR.50 |
| | | TOTAL WEIGHT THIS DRAWING | | 29 | |

| REV | DESCRIPTION | DATE |
|---|---|---|
| | | |

| | | | |
|---|---|---|---|
| DESCRIPTION | | | |
| PROJECT NAME | | | |
| DRAWN BY | VN | JOB No. | DRG No. |
| DATE DRAWN | 07/19/2024 | | N50 |

Tekla structures

FRONT VIEW

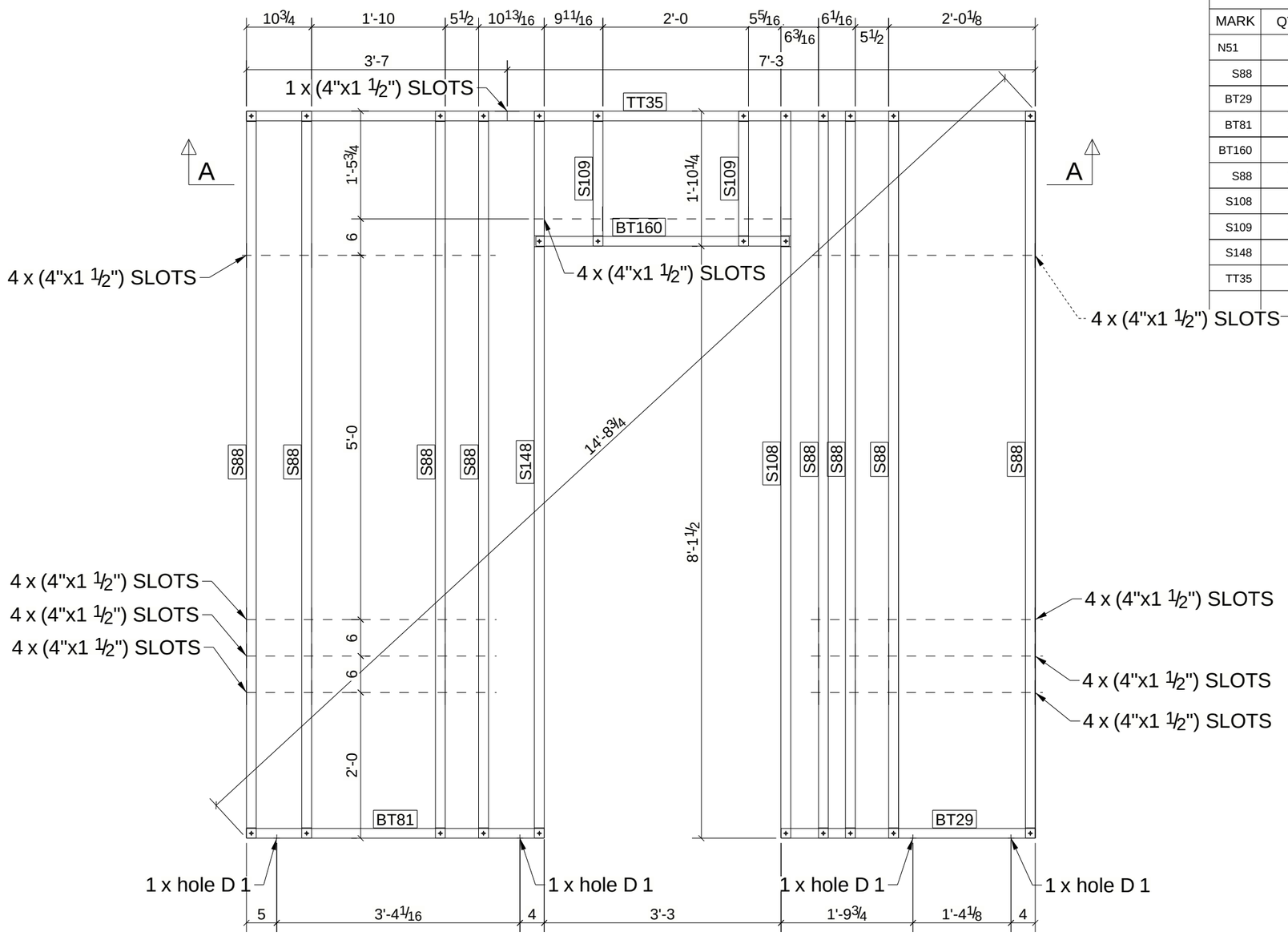


# BILL OF MATERIAL

| MARK | QTY | DESCRIPTION | LENGTH | WEIGHT | REMARKS |
|---|---|---|---|---|---|
| N51 | 1 | NON-LOAD BEARING WALL | | | SQ-2 |
| S88 | 1 | 550S162-27 | 9'-11 11/16" | 8.49 | A653-GR.50 |
| BT29 | 1 | 550S162-27 | 3'-5 7/8" | 2.97 | A653-GR.50 |
| BT81 | 1 | 550S162-27 | 4'-1 1/16" | 3.48 | A653-GR.50 |
| BT160 | 1 | 550S162-27 | 3'-5 3/4" | 2.96 | A653-GR.50 |
| S88 | 7 | 550S162-27 | 9'-11 11/16" | 59.41 | A653-GR.50 |
| S108 | 1 | 550S162-27 | 9'-11 11/16" | 8.49 | A653-GR.50 |
| S109 | 2 | 550S162-27 | 1'-10 3/16" | 3.15 | A653-GR.50 |
| S148 | 1 | 550S162-27 | 9'-11 11/16" | 8.49 | A653-GR.50 |
| TT35 | 1 | 550S162-27 | 10'-10" | 9.22 | A653-GR.50 |
| | | TOTAL WEIGHT THIS DRAWING | | 107 | |

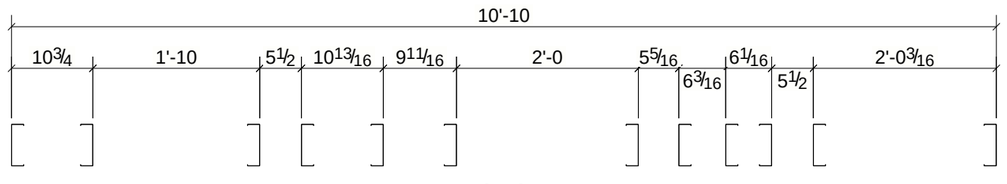


A - A

| REV | DESCRIPTION | DATE |
|---|---|---|
| | | |

| | | | |
|---|---|---|---|
| DESCRIPTION | | | |
| PROJECT NAME | | | |
| DRAWN BY | VN | JOB No. | DRG No. |
| DATE DRAWN | 07/19/2024 | | N51 |

Tekla structures

# BILL OF MATERIAL

| MARK | QTY | DESCRIPTION | LENGTH | WEIGHT | REMARKS |
|---|---|---|---|---|---|
| N52 | 1 | NON-LOAD BEARING WALL | | | SQ-2 |
| S288 | 1 | 350S162-33 | 1'-6 1/16" | 1.32 | A653-GR.50 |
| BT161 | 1 | 350S162-33 | 24'-0 3/4" | 21.13 | A653-GR.50 |
| S288 | 12 | 350S162-33 | 1'-6 1/16" | 15.86 | A653-GR.50 |
| TT108 | 1 | 350S162-33 | 24'-0 3/4" | 21.13 | A653-GR.50 |
| | | TOTAL WEIGHT THIS DRAWING | | 59 | |

FRONT VIEW

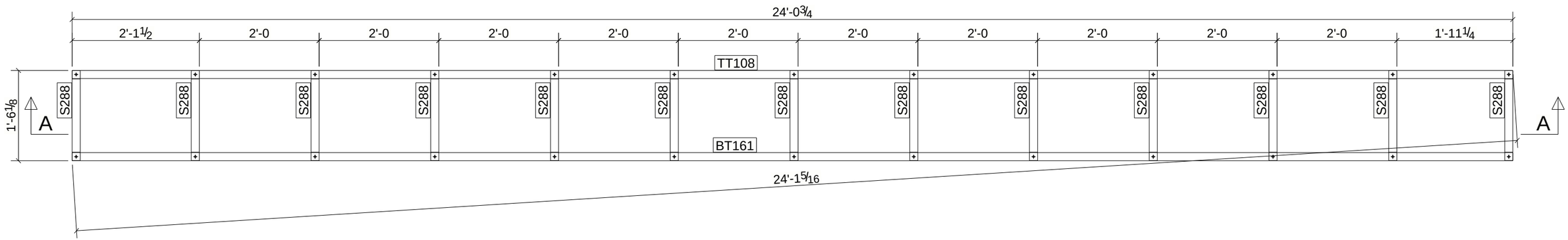


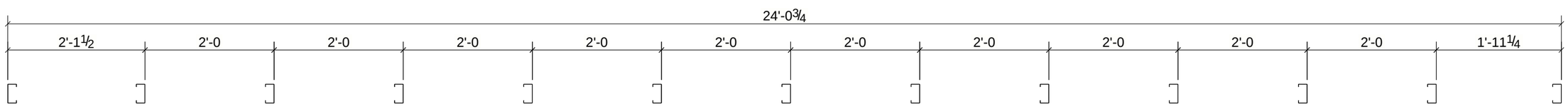


A - A

| REV | DESCRIPTION | DATE |
|---|---|---|
| | | |

| | | | |
|---|---|---|---|
| DESCRIPTION | | | |
| PROJECT NAME | | | |
| DRAWN BY | VN | JOB No. | DRG No. |
| DATE DRAWN | 07/19/2024 | | N52 |

Tekla structures

# BILL OF MATERIAL

| MARK | QTY | DESCRIPTION | LENGTH | WEIGHT | REMARKS |
|---|---|---|---|---|---|
| N53 | 1 | NON-LOAD BEARING WALL | | | SQ-2 |
| S88 | 1 | 550S162-27 | 9'-11 11/16" | 8.49 | A653-GR.50 |
| BT86 | 1 | 550S162-27 | 16'-1 11/16" | 13.73 | A653-GR.50 |
| S88 | 8 | 550S162-27 | 9'-11 11/16" | 67.89 | A653-GR.50 |
| TT74 | 1 | 550S162-27 | 16'-1 11/16" | 13.73 | A653-GR.50 |
| | | TOTAL WEIGHT THIS DRAWING | | 104 | |

FRONT VIEW

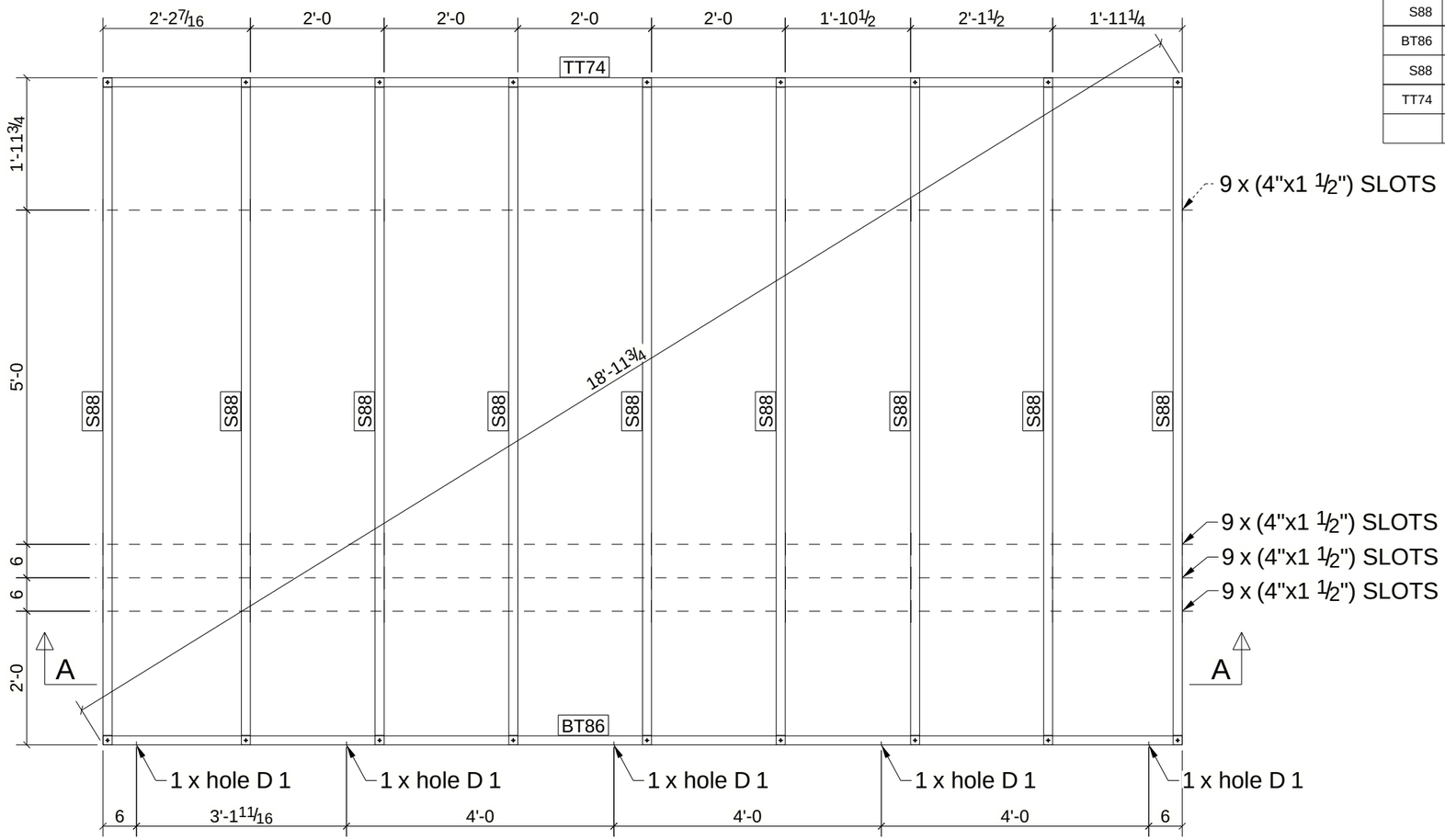


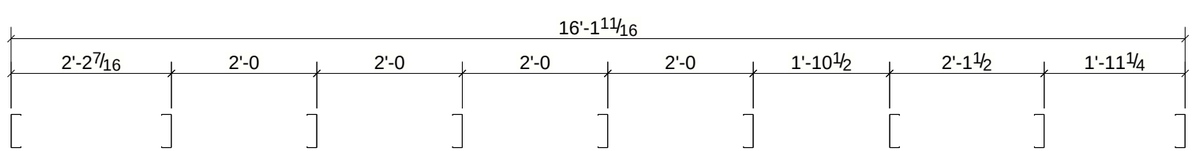


A - A

| REV | DESCRIPTION | DATE |
|---|---|---|
| | | |

| | | | |
|---|---|---|---|
| DESCRIPTION | | | |
| PROJECT NAME | | | |
| DRAWN BY | VN | JOB No. | DRG No. |
| DATE DRAWN | 07/19/2024 | | N53 |

Tekla structures

# BILL OF MATERIAL

| MARK | QTY | DESCRIPTION | LENGTH | WEIGHT | REMARKS |
|---|---|---|---|---|---|
| N54 | 1 | NON-LOAD BEARING WALL | | | SQ-2 |
| S88 | 1 | 550S162-27 | 9'-11 11/16" | 8.49 | A653-GR.50 |
| BT85 | 1 | 550S162-27 | 7'-11 1/16" | 6.74 | A653-GR.50 |
| S88 | 5 | 550S162-27 | 9'-11 11/16" | 42.43 | A653-GR.50 |
| TT73 | 1 | 550S162-27 | 7'-11 1/16" | 6.74 | A653-GR.50 |
| | | TOTAL WEIGHT THIS DRAWING | | 64 | |

FRONT VIEW

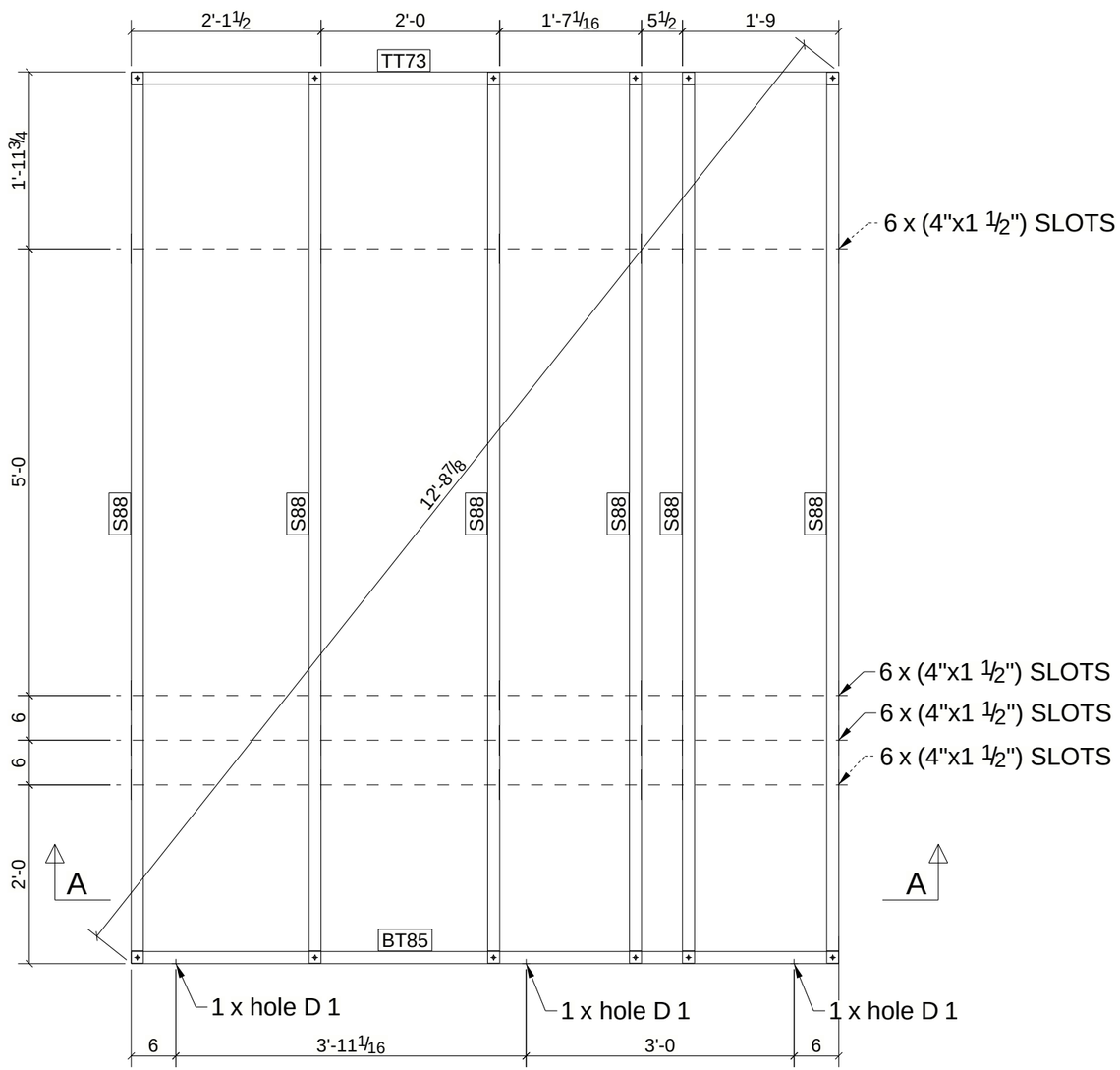


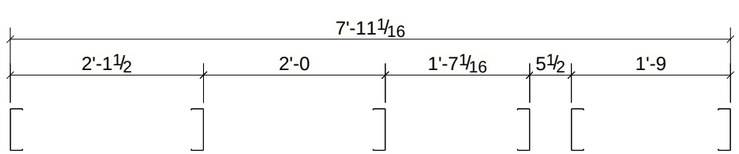


A - A

| REV | DESCRIPTION | DATE |
|---|---|---|
| | | |

| | | | |
|---|---|---|---|
| DESCRIPTION | | | |
| PROJECT NAME | | | |
| DRAWN BY | VN | JOB No. | DRG No. |
| DATE DRAWN | 07/19/2024 | | N54 |

Tekla structures

FRONT VIEW

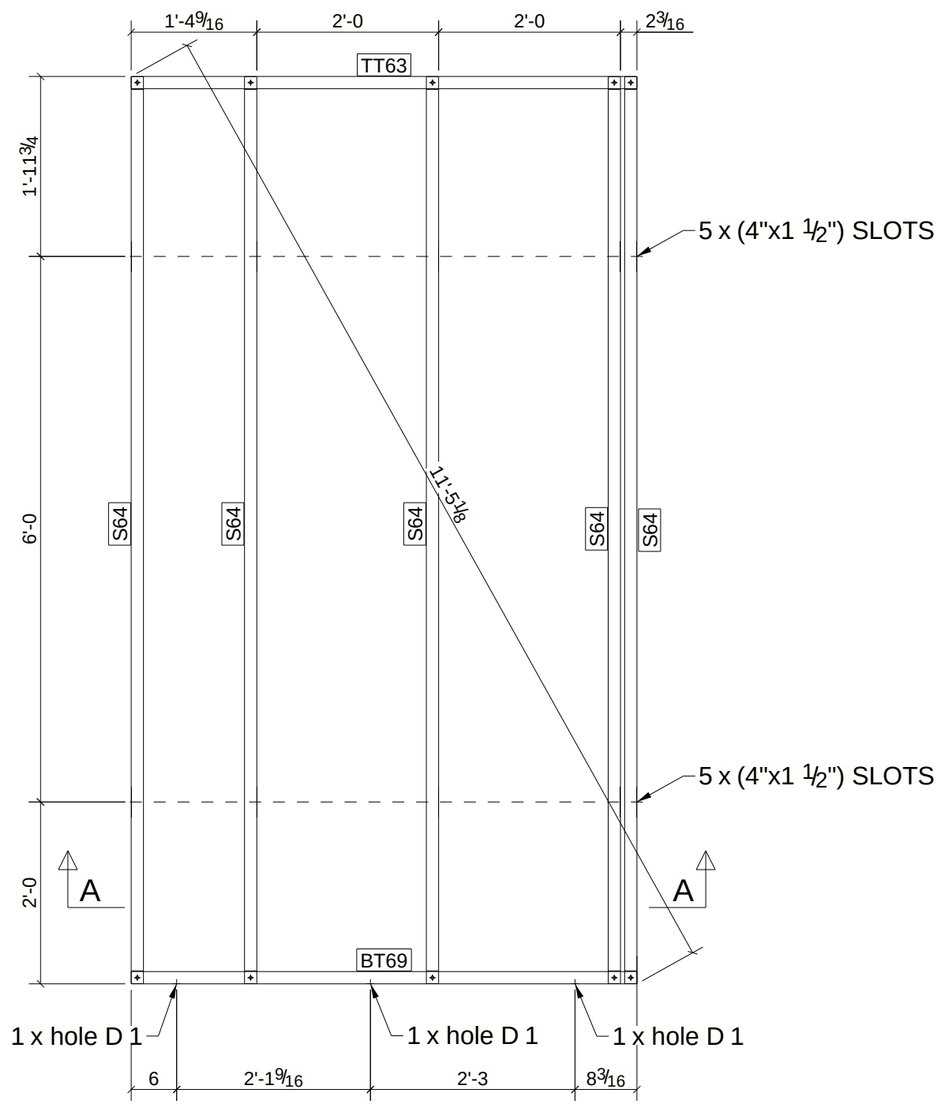


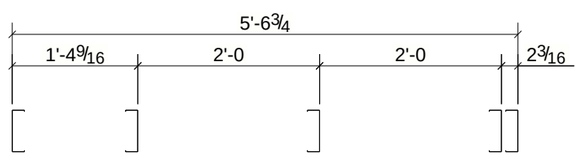


A - A

# BILL OF MATERIAL

| MARK | QTY | DESCRIPTION | LENGTH | WEIGHT | REMARKS |
|---|---|---|---|---|---|
| N55 | 1 | NON-LOAD BEARING WALL | | | SQ-2 |
| S64 | 1 | 550S162-27 | 9'-11 11/16" | 8.49 | A653-GR.50 |
| BT69 | 1 | 550S162-27 | 5'-6 3/4" | 4.73 | A653-GR.50 |
| S64 | 4 | 550S162-27 | 9'-11 11/16" | 33.95 | A653-GR.50 |
| TT63 | 1 | 550S162-27 | 5'-6 3/4" | 4.73 | A653-GR.50 |
| | | TOTAL WEIGHT THIS DRAWING | | 52 | |

| REV | DESCRIPTION | DATE |
|---|---|---|
| | | |

| | | | |
|---|---|---|---|
| DESCRIPTION | | | |
| PROJECT NAME | | | |
| DRAWN BY | VN | JOB No. | DRG No. |
| DATE DRAWN | 07/19/2024 | | N55 |

Tekla structures

FRONT VIEW

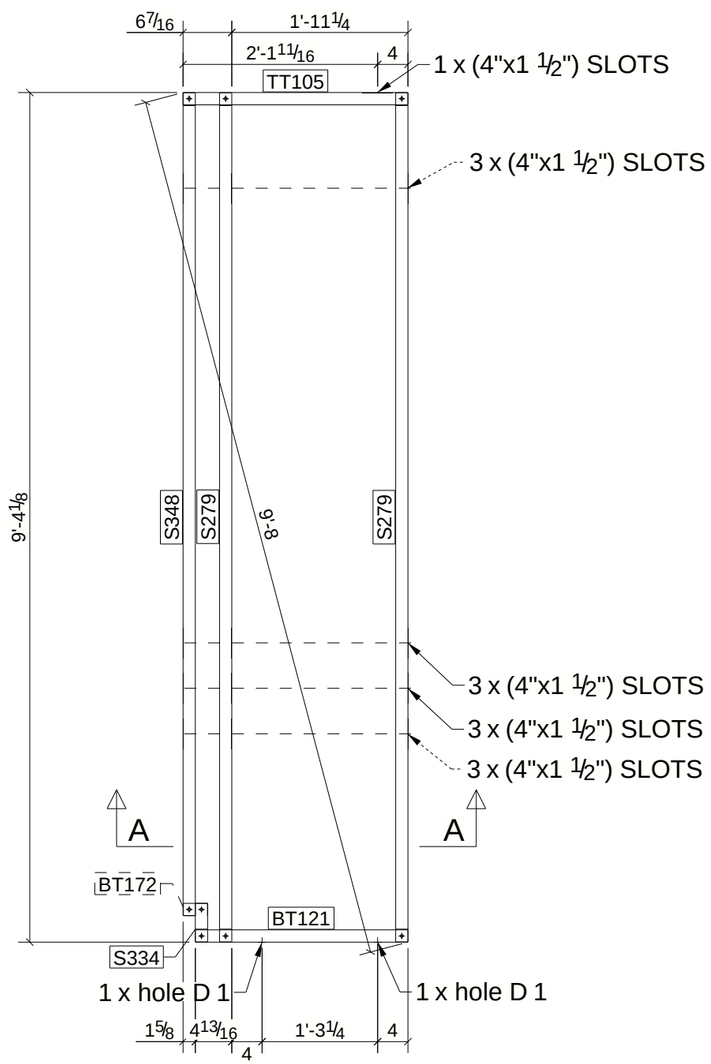


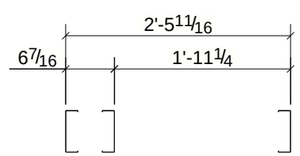


A - A

# BILL OF MATERIAL

| MARK | QTY | DESCRIPTION | LENGTH | WEIGHT | REMARKS |
|---|---|---|---|---|---|
| N56 | 1 | NON-LOAD BEARING WALL | | | SQ-2 |
| S279 | 1 | 550S162-27 | 9'-4 1/16" | 7.95 | A653-GR.50 |
| BT121 | 1 | 550S162-27 | 2'-4 1/16" | 1.99 | A653-GR.50 |
| BT172 | 1 | 550S162-27 | 0'-3 3/16" | 0.23 | A653-GR.50 |
| S279 | 1 | 550S162-27 | 9'-4 1/16" | 7.95 | A653-GR.50 |
| S334 | 1 | 550S162-27 | 0'-5 1/16" | 0.36 | A653-GR.50 |
| S348 | 1 | 550S162-27 | 9'-0 5/8" | 7.70 | A653-GR.50 |
| TT105 | 1 | 550S162-27 | 2'-5 11/16" | 2.10 | A653-GR.50 |
| | | TOTAL WEIGHT THIS DRAWING | | 28 | |

| REV | DESCRIPTION | DATE |
|---|---|---|
| | | |

| | | | |
|---|---|---|---|
| DESCRIPTION | | | |
| PROJECT NAME | | | |
| DRAWN BY | VN | JOB No. | DRG No. |
| DATE DRAWN | 07/19/2024 | | N56 |

Tekla structures

# BILL OF MATERIAL

| MARK | QTY | DESCRIPTION | LENGTH | WEIGHT | REMARKS |
|---|---|---|---|---|---|
| N57 | 1 | NON-LOAD BEARING WALL | | | SQ-2 |
| S64 | 1 | 550S162-27 | 9'-11 11/16" | 8.49 | A653-GR.50 |
| BT66 | 1 | 550S162-27 | 7'-4 13/16" | 6.30 | A653-GR.50 |
| S64 | 5 | 550S162-27 | 9'-11 11/16" | 42.43 | A653-GR.50 |
| TT60 | 1 | 550S162-27 | 7'-4 13/16" | 6.30 | A653-GR.50 |
| | | TOTAL WEIGHT THIS DRAWING | | 64 | |

FRONT VIEW

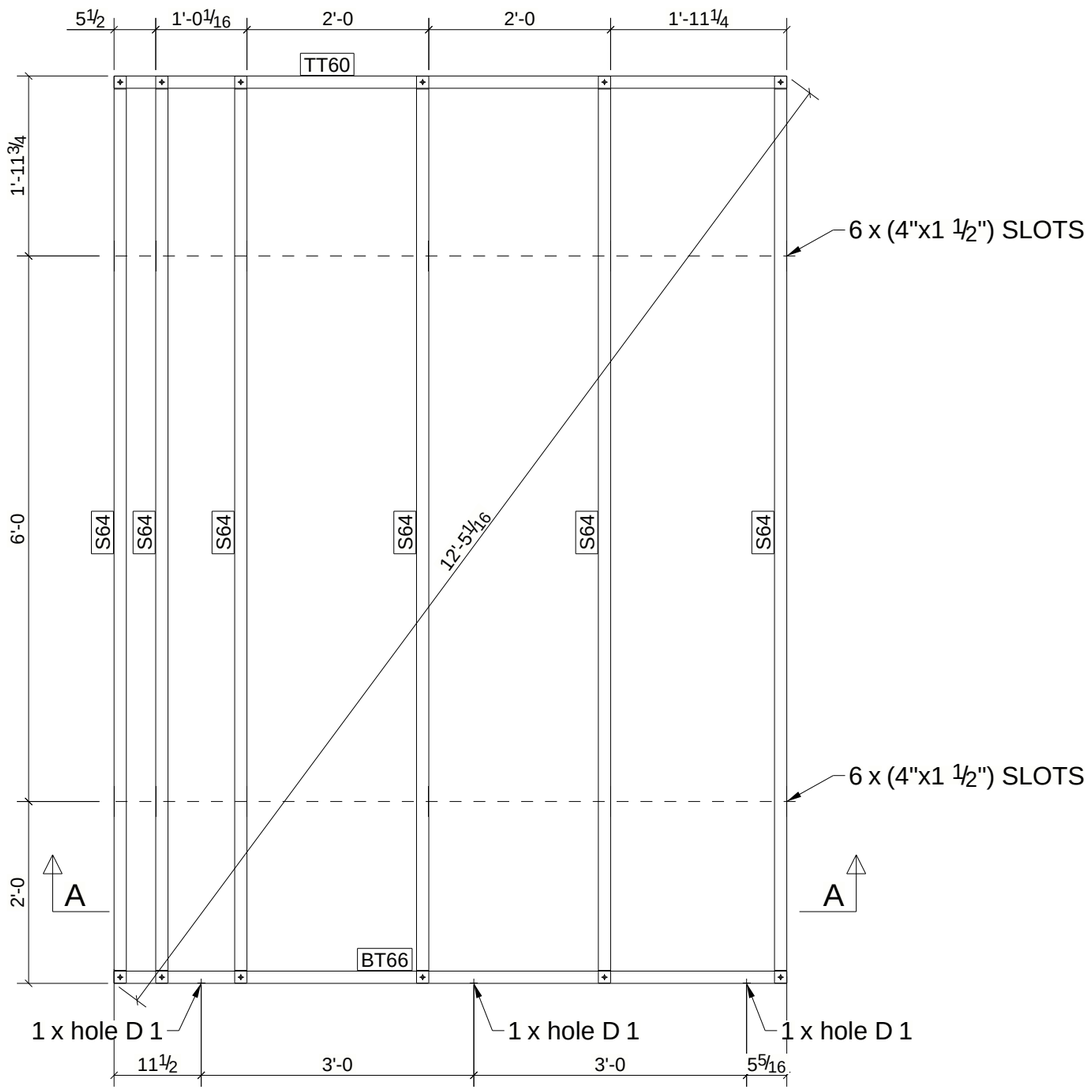


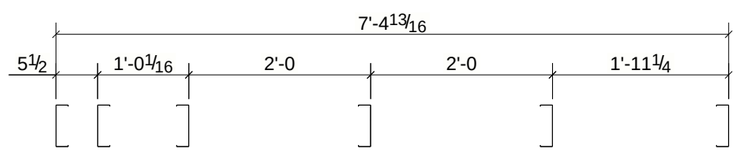


A - A

| REV | DESCRIPTION | DATE |
|---|---|---|
| | | |

| | | | |
|---|---|---|---|
| DESCRIPTION | | | |
| PROJECT NAME | | | |
| DRAWN BY | VN | JOB No. | DRG No. |
| DATE DRAWN | 07/19/2024 | | N57 |

Tekla structures

# BILL OF MATERIAL

| MARK | QTY | DESCRIPTION | LENGTH | WEIGHT | REMARKS |
|---|---|---|---|---|---|
| N58 | 1 | NON-LOAD BEARING WALL | | | SQ-2 |
| S98 | 1 | 550S162-27 | 10'-3 3/16" | 8.73 | A653-GR.50 |
| BT136 | 1 | 550S162-27 | 12'-5" | 10.57 | A653-GR.50 |
| BT172 | 1 | 550S162-27 | 0'-3 1/4" | 0.23 | A653-GR.50 |
| S98 | 6 | 550S162-27 | 10'-3 3/16" | 52.41 | A653-GR.50 |
| S257 | 1 | 550S162-27 | 9'-11 3/4" | 8.49 | A653-GR.50 |
| S334 | 1 | 550S162-27 | 0'-5 1/8" | 0.36 | A653-GR.50 |
| TT133 | 1 | 550S162-27 | 12'-6 5/8" | 10.68 | A653-GR.50 |
| | | TOTAL WEIGHT THIS DRAWING | | 91 | |

FRONT VIEW

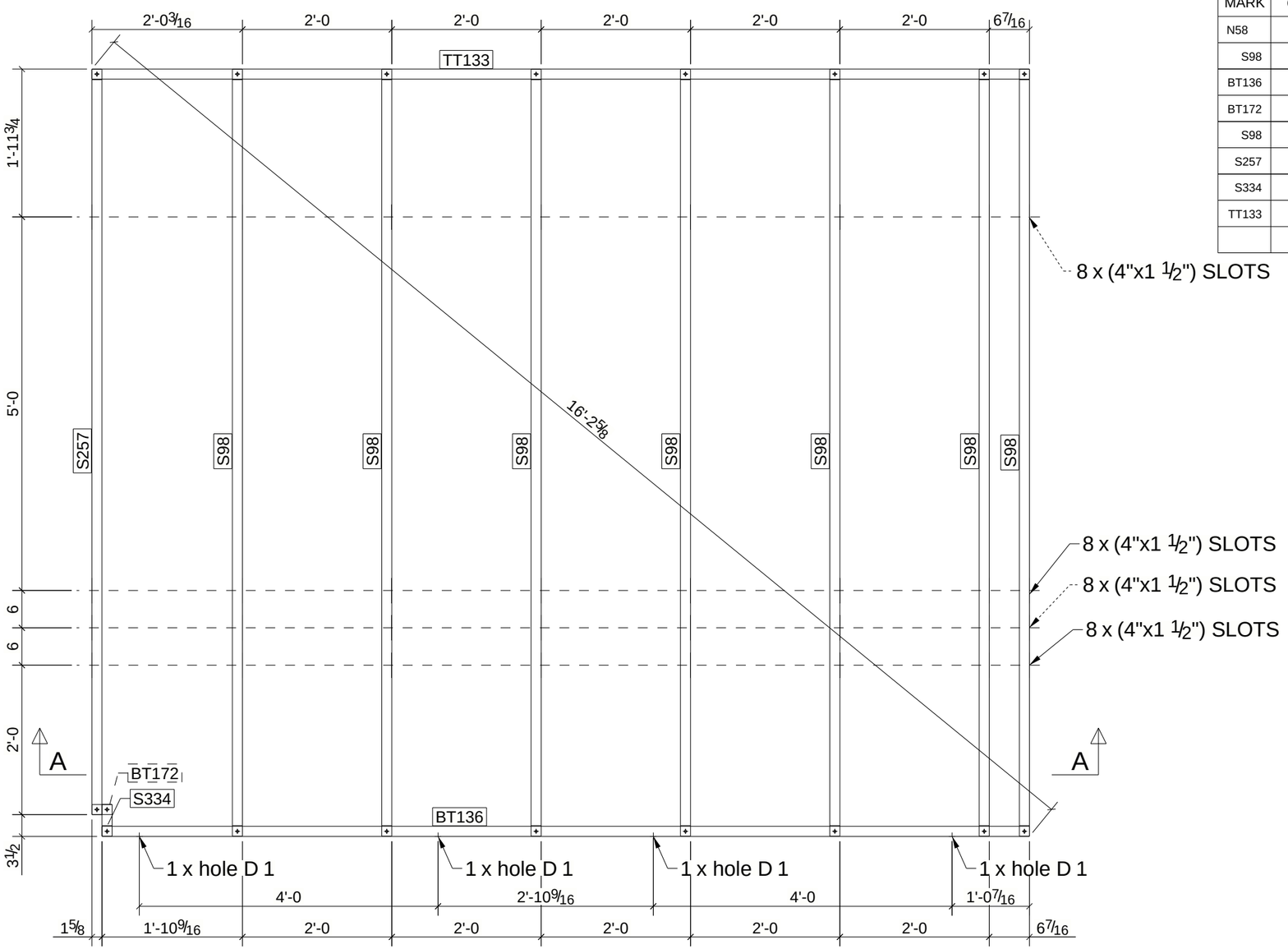


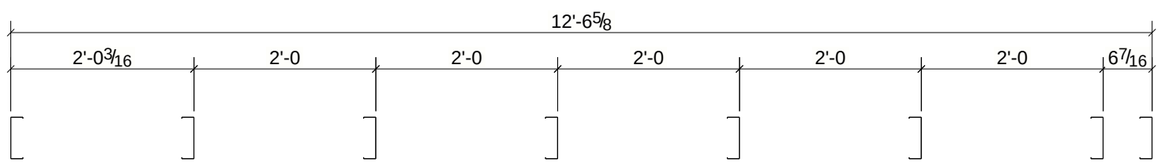


A - A

Tekla structures

| REV | DESCRIPTION | DATE |
|---|---|---|
| | | |

| | | | |
|---|---|---|---|
| DESCRIPTION | | | |
| PROJECT NAME | | | |
| DRAWN BY | VN | JOB No. | DRG No. |
| DATE DRAWN | 07/19/2024 | | N58 |

# BILL OF MATERIAL

| MARK | QTY | DESCRIPTION | LENGTH | WEIGHT | REMARKS |
|---|---|---|---|---|---|
| N59 | 1 | NON-LOAD BEARING WALL | | | SQ-2 |
| S290 | 1 | 350S162-33 | 1'-4 5/16" | 1.19 | A653-GR.50 |
| BT162 | 1 | 350S162-33 | 5'-7 15/16" | 4.97 | A653-GR.50 |
| S290 | 3 | 350S162-33 | 1'-4 5/16" | 3.58 | A653-GR.50 |
| TT109 | 1 | 350S162-33 | 5'-7 15/16" | 4.97 | A653-GR.50 |
| | | TOTAL WEIGHT THIS DRAWING | | 15 | |

FRONT VIEW

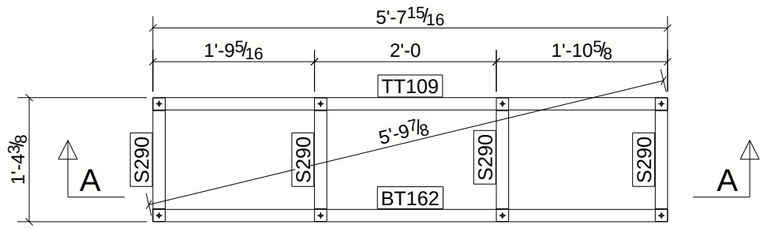


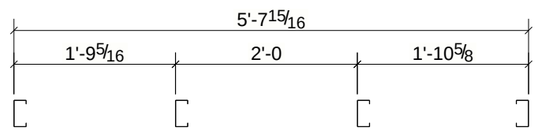


A - A

| REV | DESCRIPTION | DATE |
|---|---|---|
| | | |

| | | | |
|---|---|---|---|
| DESCRIPTION | | | |
| PROJECT NAME | | | |
| DRAWN BY | VN | JOB No. | DRG No. |
| DATE DRAWN | 07/16/2024 | | N59 |

Tekla structures

# BILL OF MATERIAL

| MARK | QTY | DESCRIPTION | LENGTH | WEIGHT | REMARKS |
|---|---|---|---|---|---|
| P1 | 4 | PARAPETS | | | SQ-2 |
| S315 | 4 | 550S162-27 | 0'-11" | 3.12 | A653-GR.50 |
| S315 | 44 | 550S162-27 | 0'-11" | 34.34 | A653-GR.50 |
| TB6 | 4 | 550S162-27 | 20'-0" | 68.06 | A653-GR.50 |
| TT115 | 4 | 550S162-27 | 20'-0" | 68.06 | A653-GR.50 |
| | | TOTAL WEIGHT THIS DRAWING | | 174 | |

FRONT VIEW

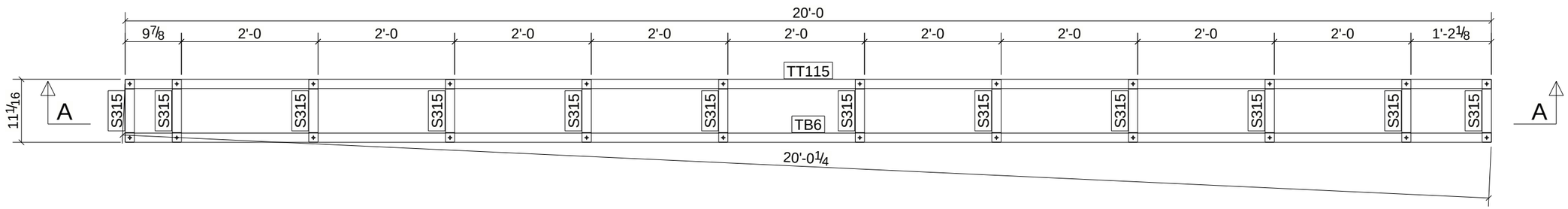


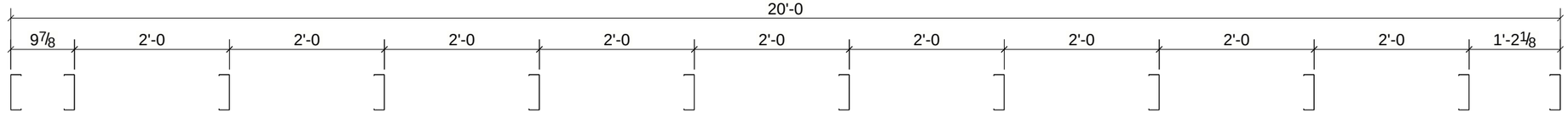


A - A

| REV | DESCRIPTION | DATE |
|---|---|---|
| | | |

| | | | |
|---|---|---|---|
| DESCRIPTION | | | |
| PROJECT NAME | | | |
| DRAWN BY | VN | JOB No. | DRG No. |
| DATE DRAWN | 07/11/2024 | | P1 |

Tekla structures

# BILL OF MATERIAL

| MARK | QTY | DESCRIPTION | LENGTH | WEIGHT | REMARKS |
|---|---|---|---|---|---|
| P10 | 1 | PARAPET | | | SQ-2 |
| S337 | 1 | 350S162-33 | 0'-11 11/16" | 0.86 | A653-GR.50 |
| S292 | 1 | 350S162-33 | 0'-11 1/4" | 0.82 | A653-GR.50 |
| S293 | 1 | 350S162-33 | 0'-10 3/4" | 0.79 | A653-GR.50 |
| S294 | 1 | 350S162-33 | 0'-10 1/4" | 0.75 | A653-GR.50 |
| S295 | 1 | 350S162-33 | 0'-9 13/16" | 0.72 | A653-GR.50 |
| S296 | 1 | 350S162-33 | 0'-9 5/16" | 0.68 | A653-GR.50 |
| S297 | 1 | 350S162-33 | 0'-8 13/16" | 0.64 | A653-GR.50 |
| S298 | 1 | 350S162-33 | 0'-8 5/16" | 0.61 | A653-GR.50 |
| S299 | 1 | 350S162-33 | 0'-7 13/16" | 0.57 | A653-GR.50 |
| S300 | 1 | 350S162-33 | 0'-7 3/8" | 0.54 | A653-GR.50 |
| S301 | 1 | 350S162-33 | 0'-6 7/8" | 0.50 | A653-GR.50 |
| TB1 | 1 | 350S162-33 | 20'-0 1/16" | 17.56 | A653-GR.50 |
| TT110 | 1 | 350S162-33 | 20'-0" | 17.56 | A653-GR.50 |
| | | TOTAL WEIGHT THIS DRAWING | | 43 | |

FRONT VIEW

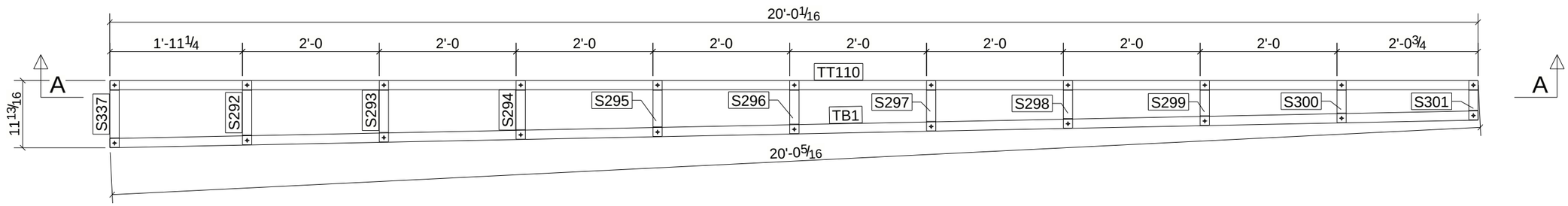


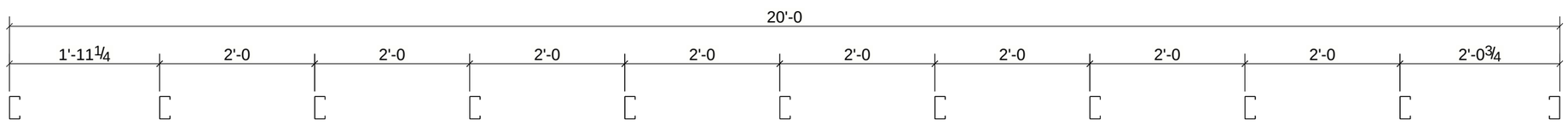


A - A

| REV | DESCRIPTION | DATE |
|---|---|---|
| | | |

| | | | |
|---|---|---|---|
| DESCRIPTION | | | |
| PROJECT NAME | | | |
| DRAWN BY | VN | JOB No. | DRG No. |
| DATE DRAWN | 07/16/2024 | | P10 |

Tekla structures

# BILL OF MATERIAL

| MARK | QTY | DESCRIPTION | LENGTH | WEIGHT | REMARKS |
|---|---|---|---|---|---|
| P11 | 2 | PARAPETS | | | SQ-2 |
| S337 | 2 | 350S162-33 | 0'-11 3/4" | 1.72 | A653-GR.50 |
| S337 | 22 | 350S162-33 | 0'-11 3/4" | 18.91 | A653-GR.50 |
| TB11 | 2 | 350S162-33 | 20'-0" | 35.12 | A653-GR.50 |
| TT128 | 2 | 350S162-33 | 20'-0" | 35.12 | A653-GR.50 |
| | | TOTAL WEIGHT THIS DRAWING | | 91 | |

FRONT VIEW

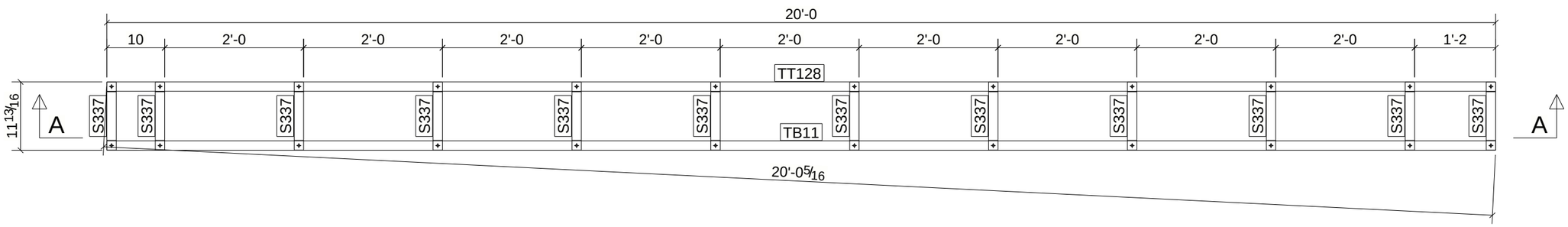


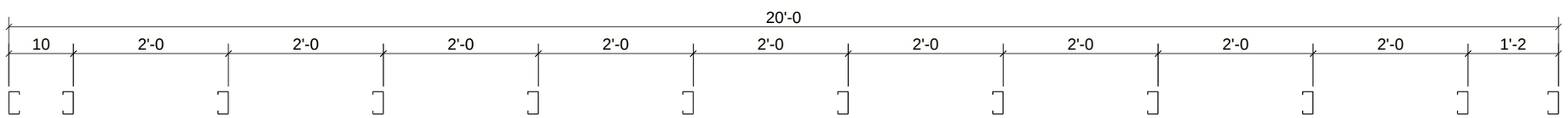


A - A

| REV | DESCRIPTION | DATE |
|---|---|---|
| | | |

| | | | |
|---|---|---|---|
| DESCRIPTION | | | |
| PROJECT NAME | | | |
| DRAWN BY | VN | JOB No. | DRG No. |
| DATE DRAWN | 07/16/2024 | | P11 |

Tekla structures

# BILL OF MATERIAL

| MARK | QTY | DESCRIPTION | LENGTH | WEIGHT | REMARKS |
|---|---|---|---|---|---|
| P7 | 1 | PARAPET | | | SQ-2 |
| S304 | 1 | 350S162-33 | 0'-5 3/4" | 0.42 | A653-GR.50 |
| S304 | 4 | 350S162-33 | 0'-5 3/4" | 1.68 | A653-GR.50 |
| TB5 | 1 | 350S162-33 | 4'-4 13/16" | 3.86 | A653-GR.50 |
| TT114 | 1 | 350S162-33 | 4'-4 13/16" | 3.86 | A653-GR.50 |
| | | TOTAL WEIGHT THIS DRAWING | | 10 | |

FRONT VIEW

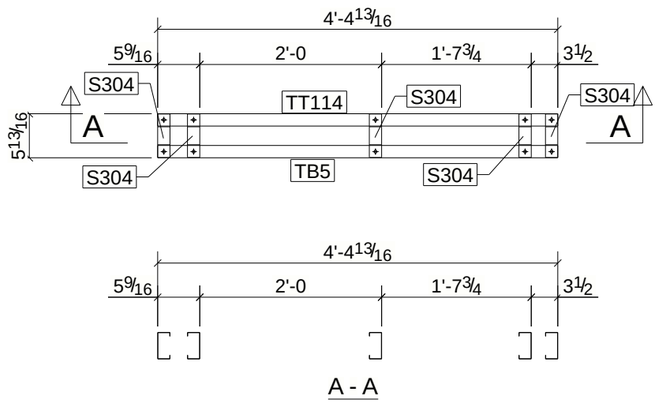


A - A

| REV | DESCRIPTION | DATE |
|---|---|---|
| | | |

| | | | |
|---|---|---|---|
| DESCRIPTION | | | |
| PROJECT NAME | | | |
| DRAWN BY | VN | JOB No. | DRG No. |
| DATE DRAWN | 07/16/2024 | | P7 |

Tekla structures

# BILL OF MATERIAL

| MARK | QTY | DESCRIPTION | LENGTH | WEIGHT | REMARKS |
|---|---|---|---|---|---|
| P9 | 1 | PARAPET | | | SQ-2 |
| S333 | 1 | 350S162-33 | 1'-4 1/16" | 1.18 | A653-GR.50 |
| S333 | 8 | 350S162-33 | 1'-4 1/16" | 9.40 | A653-GR.50 |
| TB10 | 1 | 350S162-33 | 14'-11 7/8" | 13.16 | A653-GR.50 |
| TT126 | 1 | 350S162-33 | 14'-11 7/8" | 13.16 | A653-GR.50 |
| | | TOTAL WEIGHT THIS DRAWING | | 37 | |

FRONT VIEW

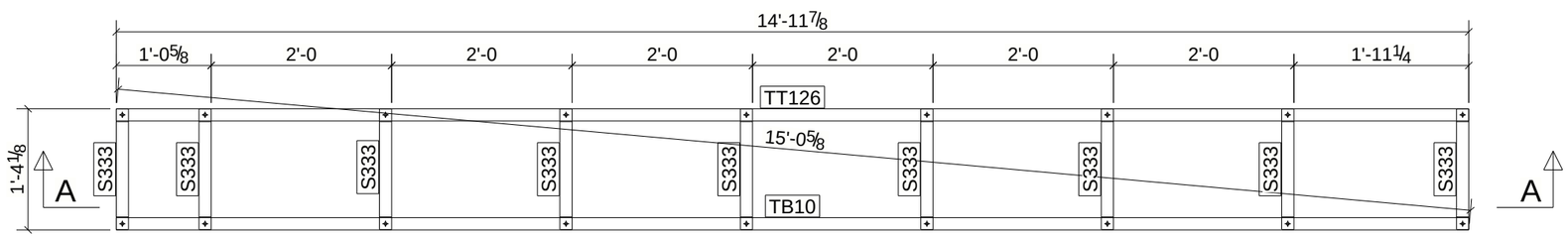


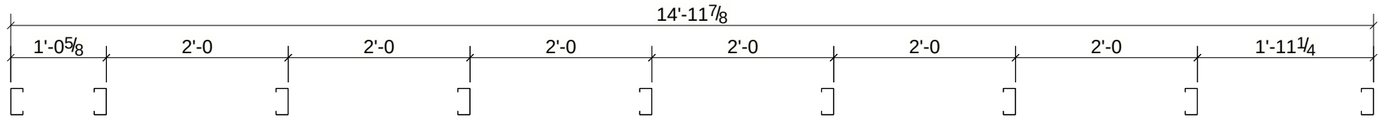


A - A

| REV | DESCRIPTION | DATE |
|---|---|---|
| | | |

| | | | |
|---|---|---|---|
| DESCRIPTION | | | |
| PROJECT NAME | | | |
| DRAWN BY | VN | JOB No. | DRG No. |
| DATE DRAWN | 07/16/2024 | | P9 |

Tekla structures

# BILL OF MATERIAL

| MARK | QTY | DESCRIPTION | LENGTH | WEIGHT | REMARKS |
|---|---|---|---|---|---|
| P12 | 1 | PARAPET | | | SQ-2 |
| S337 | 1 | 350S162-33 | 0'-11 3/4" | 0.86 | A653-GR.50 |
| S337 | 11 | 350S162-33 | 0'-11 3/4" | 9.45 | A653-GR.50 |
| TB12 | 1 | 350S162-33 | 20'-0" | 17.56 | A653-GR.50 |
| TT129 | 1 | 350S162-33 | 20'-0" | 17.56 | A653-GR.50 |
| | | TOTAL WEIGHT THIS DRAWING | | 45 | |

FRONT VIEW

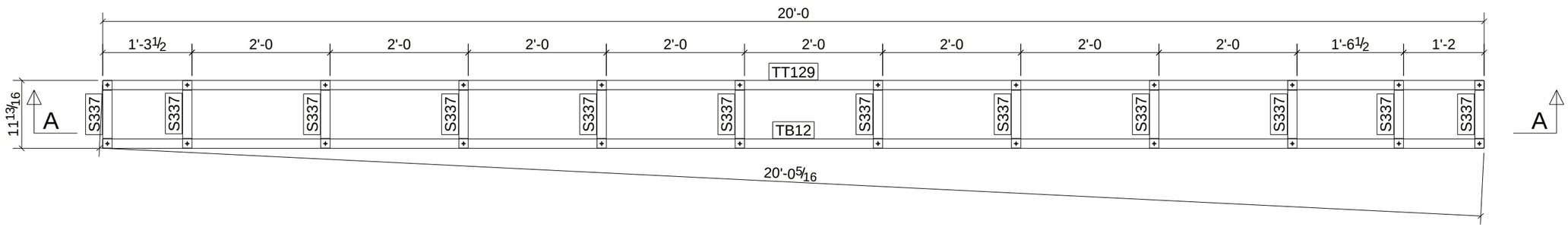


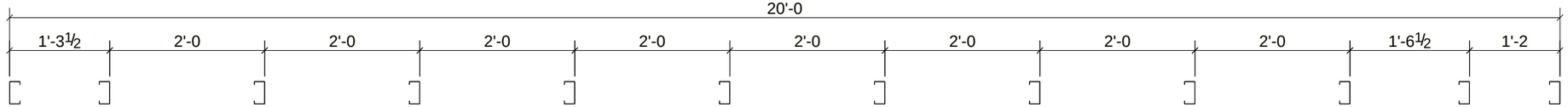


A - A

| REV | DESCRIPTION | DATE |
|---|---|---|
| | | |

| | | | |
|---|---|---|---|
| DESCRIPTION | | | |
| PROJECT NAME | | | |
| DRAWN BY | VN | JOB No. | DRG No. |
| DATE DRAWN | 07/16/2024 | | P12 |

Tekla structures

# BILL OF MATERIAL

| MARK | QTY | DESCRIPTION | LENGTH | WEIGHT | REMARKS |
|---|---|---|---|---|---|
| P5 | 1 | PARAPET | | | SQ-2 |
| S281 | 1 | 350S162-33 | 0'-5 11/16" | 0.42 | A653-GR.50 |
| S305 | 1 | 350S162-33 | 0'-5 7/16" | 0.40 | A653-GR.50 |
| S306 | 1 | 350S162-33 | 0'-4 15/16" | 0.36 | A653-GR.50 |
| S307 | 1 | 350S162-33 | 0'-4 7/16" | 0.32 | A653-GR.50 |
| S308 | 1 | 350S162-33 | 0'-3 15/16" | 0.29 | A653-GR.50 |
| S309 | 1 | 350S162-33 | 0'-3 7/16" | 0.25 | A653-GR.50 |
| S310 | 1 | 350S162-33 | 0'-3 5/16" | 0.24 | A653-GR.50 |
| TB3 | 1 | 350S162-33 | 10'-0 3/16" | 8.80 | A653-GR.50 |
| TT112 | 1 | 350S162-33 | 10'-0 3/16" | 8.79 | A653-GR.50 |
| | | TOTAL WEIGHT THIS DRAWING | | 20 | |

FRONT VIEW

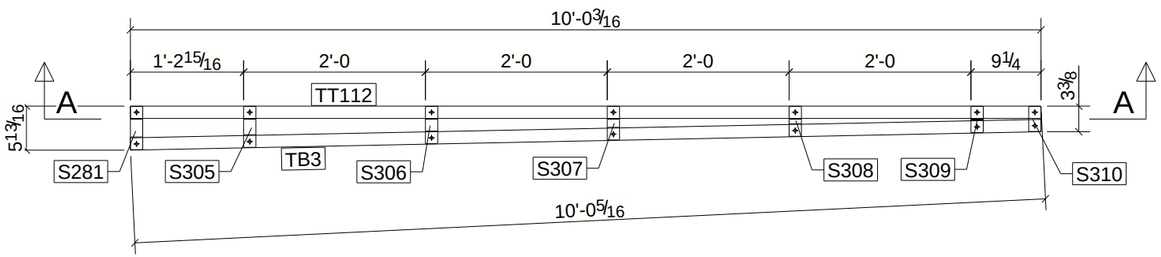


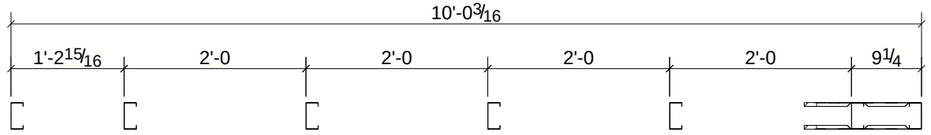


A - A

| REV | DESCRIPTION | DATE |
|---|---|---|
| | | |

| | | | |
|---|---|---|---|
| DESCRIPTION | | | |
| PROJECT NAME | | | |
| DRAWN BY | VN | JOB No. | DRG No. |
| DATE DRAWN | 07/16/2024 | | P5 |

Tekla structures

# BILL OF MATERIAL

| MARK | QTY | DESCRIPTION | LENGTH | WEIGHT | REMARKS |
|---|---|---|---|---|---|
| P4 | 1 | PARAPET | | | SQ-2 |
| S333 | 1 | 350S162-33 | 1'-4 1/16" | 1.18 | A653-GR.50 |
| S333 | 10 | 350S162-33 | 1'-4 1/16" | 11.75 | A653-GR.50 |
| TB9 | 1 | 350S162-33 | 20'-0" | 17.56 | A653-GR.50 |
| TT110 | 1 | 350S162-33 | 20'-0" | 17.56 | A653-GR.50 |
| | | TOTAL WEIGHT THIS DRAWING | | 48 | |

FRONT VIEW

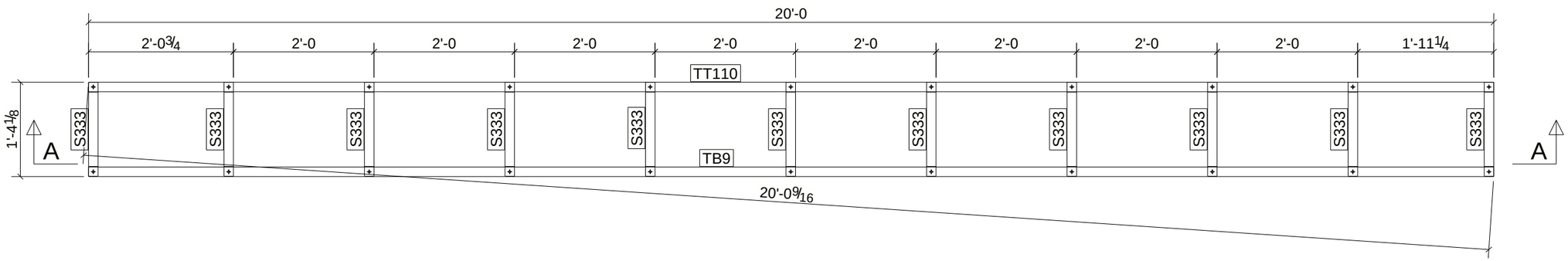


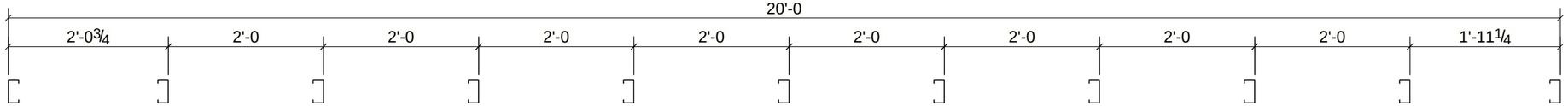


A - A

| REV | DESCRIPTION | DATE |
|---|---|---|
| | | |

| | | | |
|---|---|---|---|
| DESCRIPTION | | | |
| PROJECT NAME | | | |
| DRAWN BY | VN | JOB No. | DRG No. |
| DATE DRAWN | 07/16/2024 | | P4 |

Tekla structures

# BILL OF MATERIAL

| MARK | QTY | DESCRIPTION | LENGTH | WEIGHT | REMARKS |
|---|---|---|---|---|---|
| P2 | 1 | PARAPET | | | SQ-2 |
| S315 | 1 | 550S162-27 | 0'-11" | 0.78 | A653-GR.50 |
| S315 | 4 | 550S162-27 | 0'-11" | 3.12 | A653-GR.50 |
| TB8 | 1 | 550S162-27 | 6'-6 7/16" | 5.56 | A653-GR.50 |
| TT117 | 1 | 550S162-27 | 6'-6 7/16" | 5.56 | A653-GR.50 |
| | | TOTAL WEIGHT THIS DRAWING | | 15 | |

FRONT VIEW

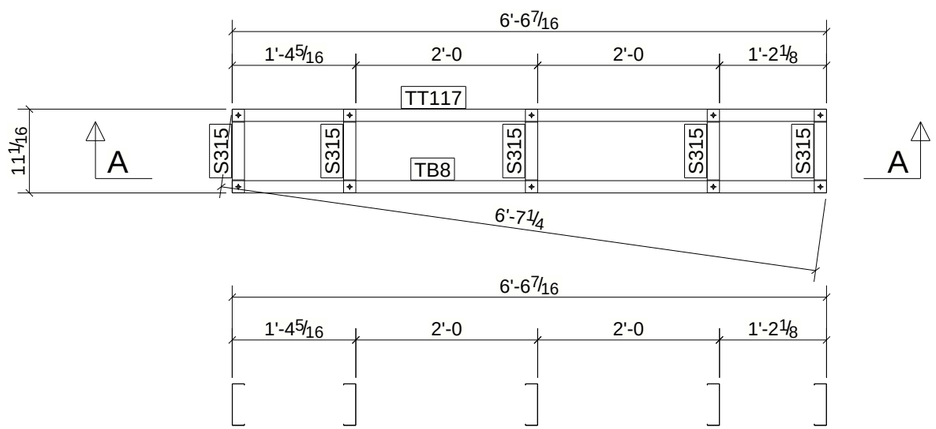


A - A

| REV | DESCRIPTION | DATE |
|---|---|---|
| | | |

| | | | |
|---|---|---|---|
| DESCRIPTION | | | |
| PROJECT NAME | | | |
| DRAWN BY | VN | JOB No. | DRG No. |
| DATE DRAWN | 07/11/2024 | | P2 |

Tekla structures

# BILL OF MATERIAL

| MARK | QTY | DESCRIPTION | LENGTH | WEIGHT | REMARKS |
|---|---|---|---|---|---|
| P6 | 1 | PARAPET | | | SQ-2 |
| S304 | 1 | 350S162-33 | 0'-5 3/4" | 0.42 | A653-GR.50 |
| S304 | 11 | 350S162-33 | 0'-5 3/4" | 4.63 | A653-GR.50 |
| TB4 | 1 | 350S162-33 | 20'-0" | 17.56 | A653-GR.50 |
| TT113 | 1 | 350S162-33 | 20'-0" | 17.56 | A653-GR.50 |
| | | TOTAL WEIGHT THIS DRAWING | | 40 | |

FRONT VIEW

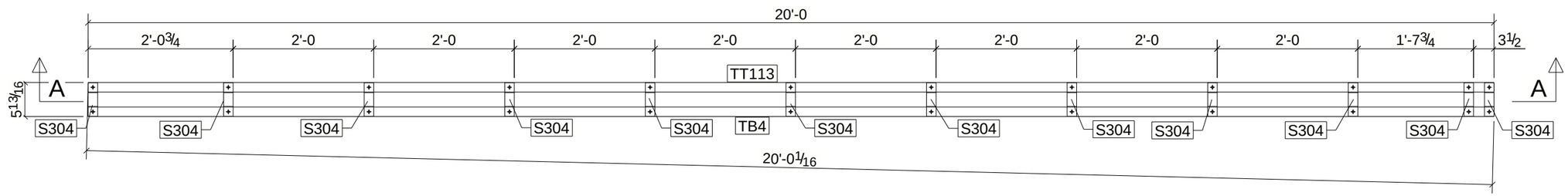


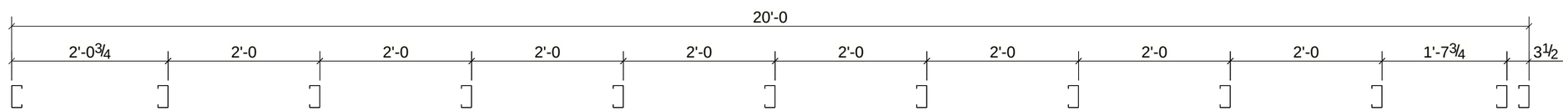


A - A

| REV | DESCRIPTION | DATE |
|---|---|---|
| | | |

| | | | |
|---|---|---|---|
| DESCRIPTION | | | |
| PROJECT NAME | | | |
| DRAWN BY | VN | JOB No. | DRG No. |
| DATE DRAWN | 07/16/2024 | | P6 |

Tekla structures

FRONT VIEW

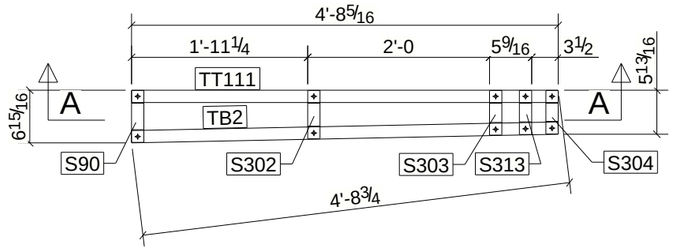


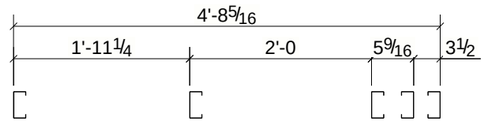


A - A

# BILL OF MATERIAL

| MARK | QTY | DESCRIPTION | LENGTH | WEIGHT | REMARKS |
|---|---|---|---|---|---|
| P8 | 1 | PARAPET | | | SQ-2 |
| S90 | 1 | 350S162-33 | 0'-6 7/8" | 0.50 | A653-GR.50 |
| S302 | 1 | 350S162-33 | 0'-6 3/8" | 0.47 | A653-GR.50 |
| S303 | 1 | 350S162-33 | 0'-5 7/8" | 0.43 | A653-GR.50 |
| S304 | 1 | 350S162-33 | 0'-5 3/4" | 0.42 | A653-GR.50 |
| S313 | 1 | 350S162-33 | 0'-5 13/16" | 0.43 | A653-GR.50 |
| TB2 | 1 | 350S162-33 | 4'-8 5/16" | 4.12 | A653-GR.50 |
| TT111 | 1 | 350S162-33 | 4'-8 5/16" | 4.12 | A653-GR.50 |
| | | TOTAL WEIGHT THIS DRAWING | | 10 | |

| REV | DESCRIPTION | DATE |
|---|---|---|
| | | |

| | | | |
|---|---|---|---|
| DESCRIPTION | | | |
| PROJECT NAME | | | |
| DRAWN BY | VN | JOB No. | DRG No. |
| DATE DRAWN | 07/16/2024 | | P8 |

Tekla structures

# BILL OF MATERIAL

| MARK | QTY | DESCRIPTION | LENGTH | WEIGHT | REMARKS |
|---|---|---|---|---|---|
| P3 | 1 | PARAPET | | | SQ-2 |
| S315 | 1 | 550S162-27 | 0'-11" | 0.78 | A653-GR.50 |
| S315 | 4 | 550S162-27 | 0'-11" | 3.12 | A653-GR.50 |
| TB7 | 1 | 550S162-27 | 6'-6 1/2" | 5.57 | A653-GR.50 |
| TT116 | 1 | 550S162-27 | 6'-6 1/2" | 5.57 | A653-GR.50 |
| | | TOTAL WEIGHT THIS DRAWING | | 15 | |

FRONT VIEW

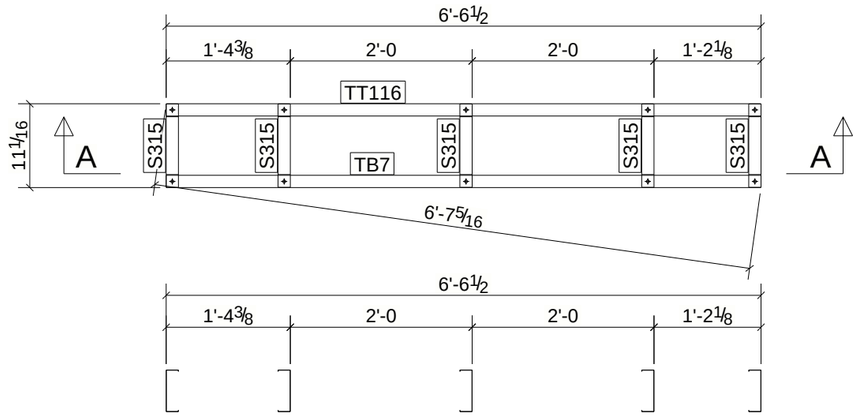


A - A

| REV | DESCRIPTION | DATE |
|---|---|---|
| | | |

| | | | |
|---|---|---|---|
| DESCRIPTION | | | |
| PROJECT NAME | | | |
| DRAWN BY | VN | JOB No. | DRG No. |
| DATE DRAWN | 07/11/2024 | | P3 |

Tekla structures

# BILL OF MATERIAL

| MARK | QTY | DESCRIPTION | LENGTH | WEIGHT | REMARKS |
|---|---|---|---|---|---|
| P13 | 1 | PARAPET | | | SQ-2 |
| S337 | 1 | 350S162-33 | 0'-11 3/4" | 0.86 | A653-GR.50 |
| S337 | 5 | 350S162-33 | 0'-11 3/4" | 4.30 | A653-GR.50 |
| TB13 | 1 | 350S162-33 | 5'-10 5/16" | 5.15 | A653-GR.50 |
| TT130 | 1 | 350S162-33 | 5'-10 5/16" | 5.15 | A653-GR.50 |
| | | TOTAL WEIGHT THIS DRAWING | | 15 | |

FRONT VIEW

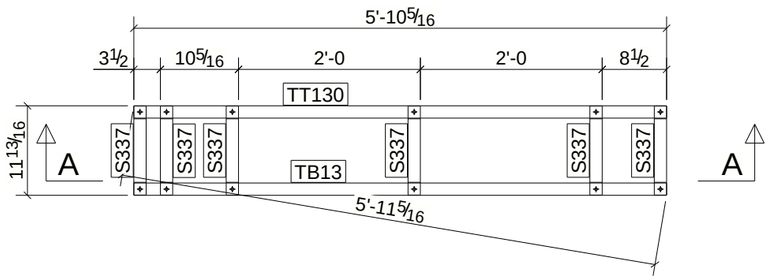


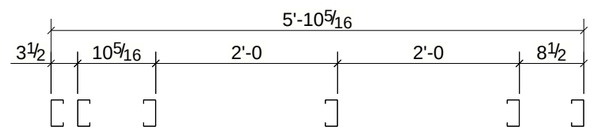


A - A

| REV | DESCRIPTION | DATE |
|---|---|---|
| | | |

| | | | |
|---|---|---|---|
| DESCRIPTION | | | |
| PROJECT NAME | | | |
| DRAWN BY | VN | JOB No. | DRG No. |
| DATE DRAWN | 07/16/2024 | | P13 |

Tekla structures

# BILL OF MATERIAL

| MARK | QTY | DESCRIPTION | LENGTH | WEIGHT | REMARKS |
|---|---|---|---|---|---|
| FR2 | 1 | TRUSS | | | SQ-2 |
| T31 | 1 | 350S162-43 | 20'-0" | 22.73 | A653-GR.50 |
| J13 | 2 | 350S162-43 | 2'-11 1/4" | 6.68 | A653-GR.50 |
| J14 | 10 | 350S162-43 | 2'-11 1/4" | 33.40 | A653-GR.50 |
| T31 | 1 | 350S162-43 | 20'-0" | 22.73 | A653-GR.50 |
| T33 | 1 | 350S162-43 | 19'-11 15*** | 22.73 | A653-GR.50 |
| | | TOTAL WEIGHT THIS DRAWING | | 108 | |

FRONT VIEW

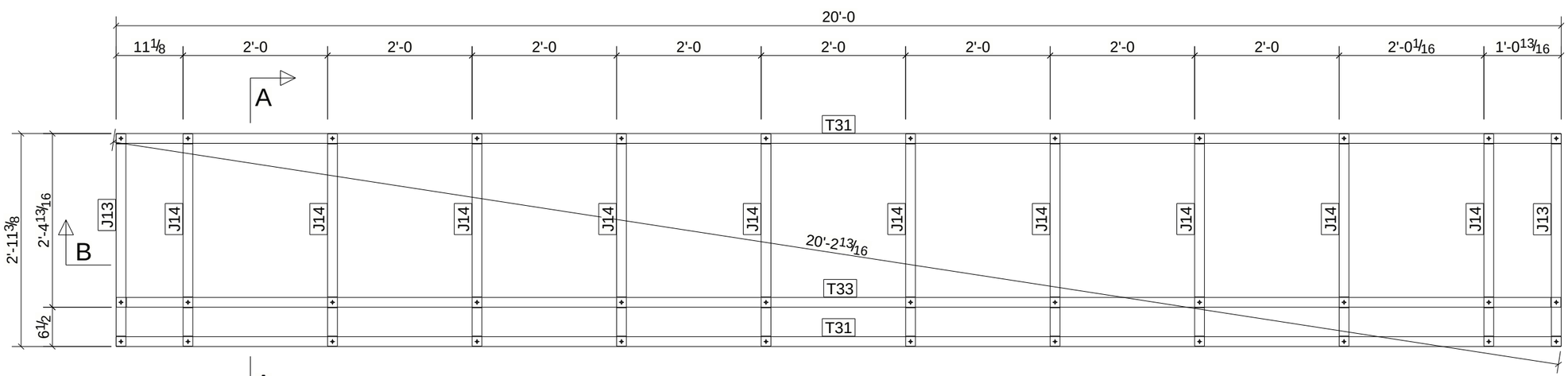


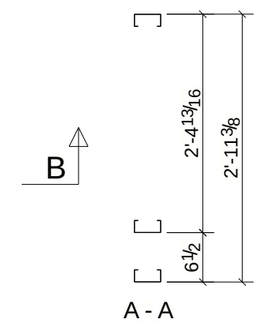


A - A

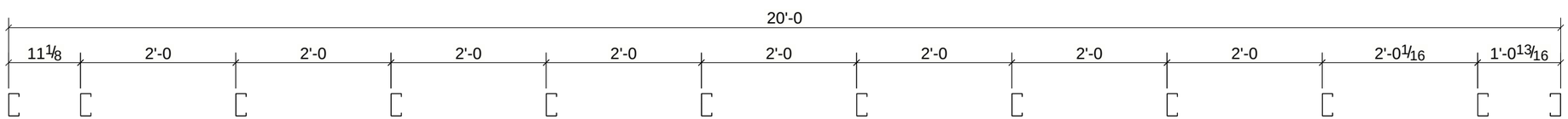


B - B

| REV | DESCRIPTION | DATE |
|---|---|---|
| | | |

| | | | |
|---|---|---|---|
| DESCRIPTION | | | |
| PROJECT NAME | | | |
| DRAWN BY | | JOB No. | DRG No. |
| DATE DRAWN | 08/14/2024 | | FR2 |

Tekla structures

# BILL OF MATERIAL

| MARK | QTY | DESCRIPTION | LENGTH | WEIGHT | REMARKS |
|---|---|---|---|---|---|
| FR1 | 1 | TRUSS | | | SQ-2 |
| T32 | 1 | 350S162-43 | 14'-11 7/8" | 17.04 | A653-GR.50 |
| J13 | 2 | 350S162-43 | 2'-11 1/4" | 6.68 | A653-GR.50 |
| J14 | 7 | 350S162-43 | 2'-11 1/4" | 23.38 | A653-GR.50 |
| T32 | 1 | 350S162-43 | 14'-11 7/8" | 17.04 | A653-GR.50 |
| T34 | 1 | 350S162-43 | 14'-11 13*** | 17.03 | A653-GR.50 |
| | | TOTAL WEIGHT THIS DRAWING | | 81 | |

FRONT VIEW

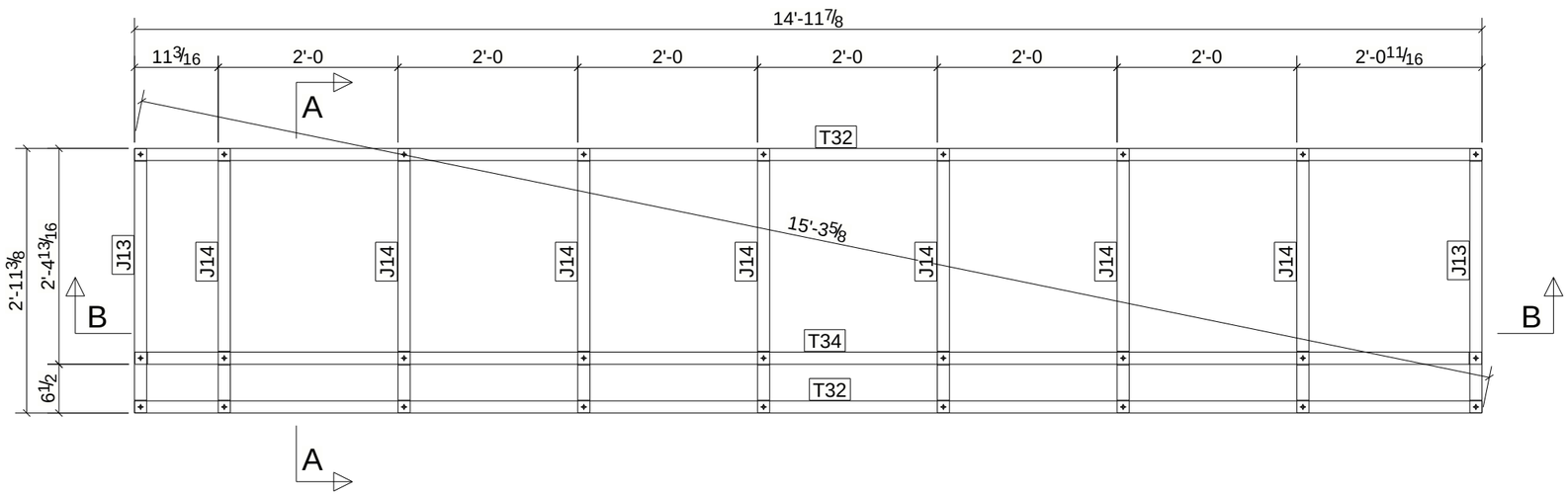


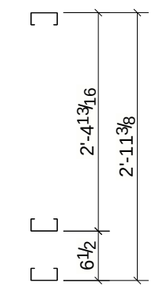


A - A

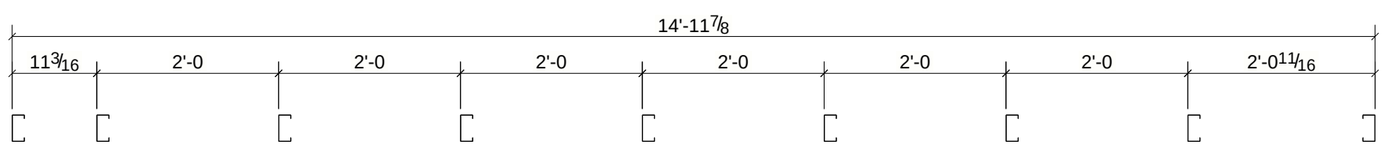


B - B

| REV | DESCRIPTION | DATE |
|---|---|---|
| | | |

| | | | |
|---|---|---|---|
| DESCRIPTION | | | |
| PROJECT NAME | | | |
| DRAWN BY | | JOB No. | DRG No. |
| DATE DRAWN | 08/14/2024 | | FR1 |

Tekla structures

# BILL OF MATERIAL

| MARK | QTY | DESCRIPTION | LENGTH | WEIGHT | REMARKS |
|---|---|---|---|---|---|
| RP1 | 1 | TRACK | | | SQ-2 |
| T38 | 1 | 350S162-33 | 3'-5 13/16" | 3.06 | A653-GR.50 |
| J16 | 3 | 350S162-33 | 2'-5 11/16" | 6.52 | A653-GR.50 |
| T38 | 1 | 350S162-33 | 3'-5 13/16" | 3.06 | A653-GR.50 |
| | | TOTAL WEIGHT THIS DRAWING | | 13 | |

FRONT VIEW

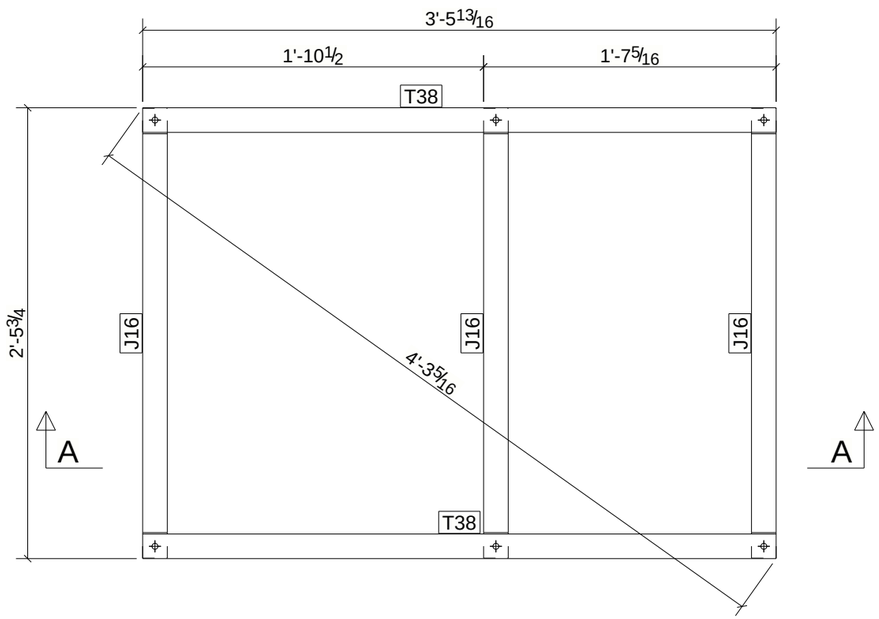


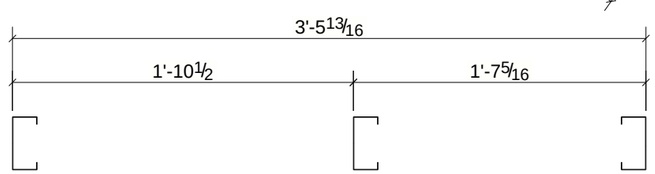


A - A

| REV | DESCRIPTION | DATE |
|---|---|---|
| | | |

| | | | |
|---|---|---|---|
| DESCRIPTION | | | |
| PROJECT NAME | | | |
| DRAWN BY | | JOB No. | DRG No. |
| DATE DRAWN | 07/16/2024 | | RP1 |

Tekla structures

# BILL OF MATERIAL

| MARK | QTY | DESCRIPTION | LENGTH | WEIGHT | REMARKS |
|---|---|---|---|---|---|
| RP3 | 1 | TRACK | | | SQ-2 |
| T40 | 1 | 350S162-33 | 6'-0" | 5.27 | A653-GR.50 |
| J22 | 3 | 350S162-33 | 3'-6 3/4" | 9.38 | A653-GR.50 |
| J27 | 1 | 350S162-33 | 3'-6 3/4" | 3.13 | A653-GR.50 |
| T40 | 1 | 350S162-33 | 6'-0" | 5.27 | A653-GR.50 |
| | | TOTAL WEIGHT THIS DRAWING | | 23 | |

FRONT VIEW

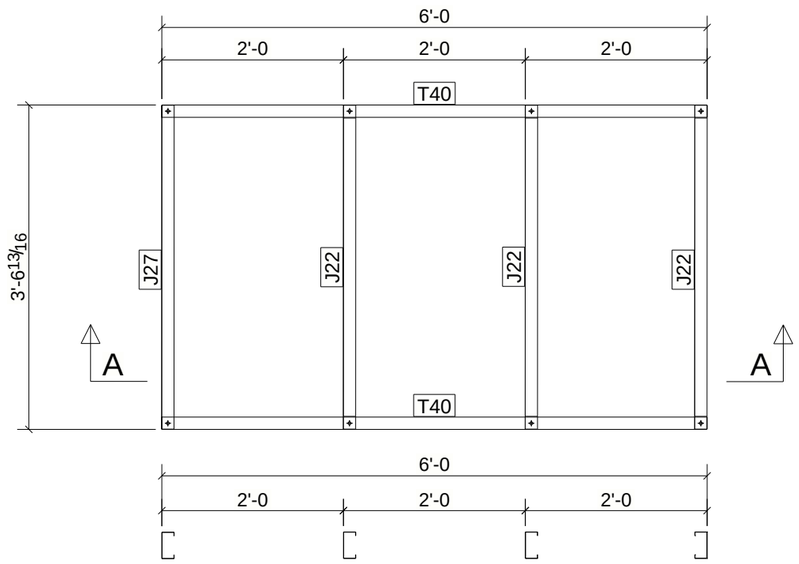


A - A

| REV | DESCRIPTION | DATE |
|---|---|---|
| | | |

| | | | |
|---|---|---|---|
| DESCRIPTION | | | |
| PROJECT NAME | | | |
| DRAWN BY | | JOB No. | DRG No. |
| DATE DRAWN | 08/14/2024 | | RP3 |

Tekla structures

# BILL OF MATERIAL

| MARK | QTY | DESCRIPTION | LENGTH | WEIGHT | REMARKS |
|---|---|---|---|---|---|
| RP4 | 1 | TRACK | | | SQ-2 |
| T39 | 1 | 350S162-33 | 3'-2 5/8" | 2.83 | A653-GR.50 |
| J22 | 3 | 350S162-33 | 3'-6 3/4" | 9.38 | A653-GR.50 |
| T39 | 1 | 350S162-33 | 3'-2 5/8" | 2.83 | A653-GR.50 |
| | | TOTAL WEIGHT THIS DRAWING | | 15 | |

FRONT VIEW

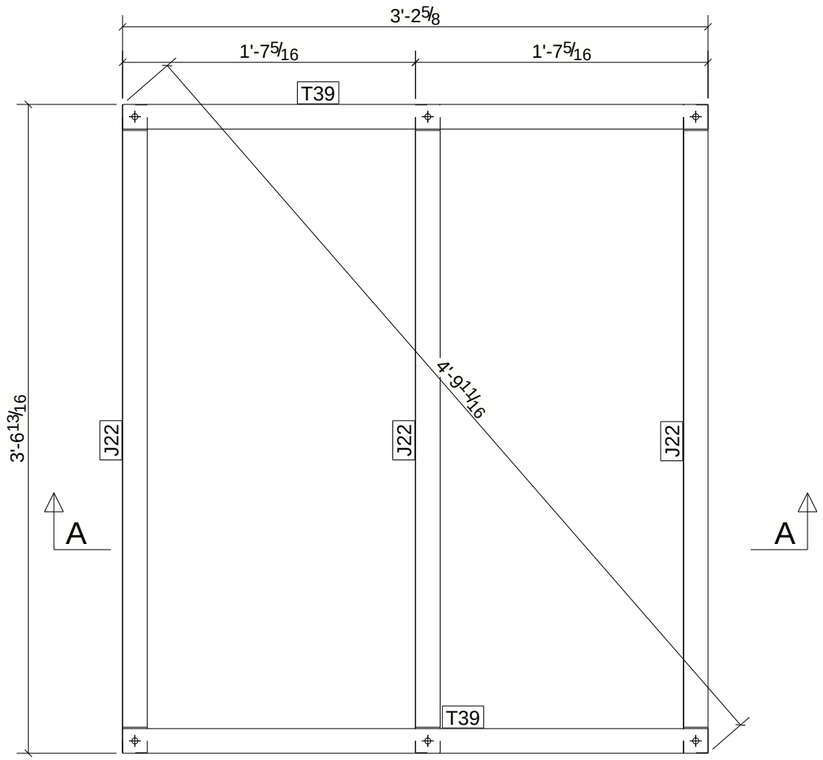


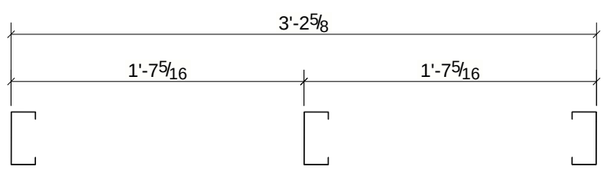


A - A

| REV | DESCRIPTION | DATE |
|---|---|---|
| | | |

| | | | |
|---|---|---|---|
| DESCRIPTION | | | |
| PROJECT NAME | | | |
| DRAWN BY | | JOB No. | DRG No. |
| DATE DRAWN | 08/14/2024 | | RP4 |

Tekla structures

# BILL OF MATERIAL

| MARK | QTY | DESCRIPTION | LENGTH | WEIGHT | REMARKS |
|---|---|---|---|---|---|
| RP2 | 1 | TRACK | | | SQ-2 |
| T36 | 1 | 350S162-33 | 19'-10 1/2" | 17.45 | A653-GR.50 |
| J16 | 8 | 350S162-33 | 2'-5 11/16" | 17.38 | A653-GR.50 |
| J20 | 3 | 350S162-33 | 2'-5 11/16" | 6.52 | A653-GR.50 |
| T36 | 1 | 350S162-33 | 19'-10 1/2" | 17.45 | A653-GR.50 |
| | | TOTAL WEIGHT THIS DRAWING | | 59 | |

FRONT VIEW

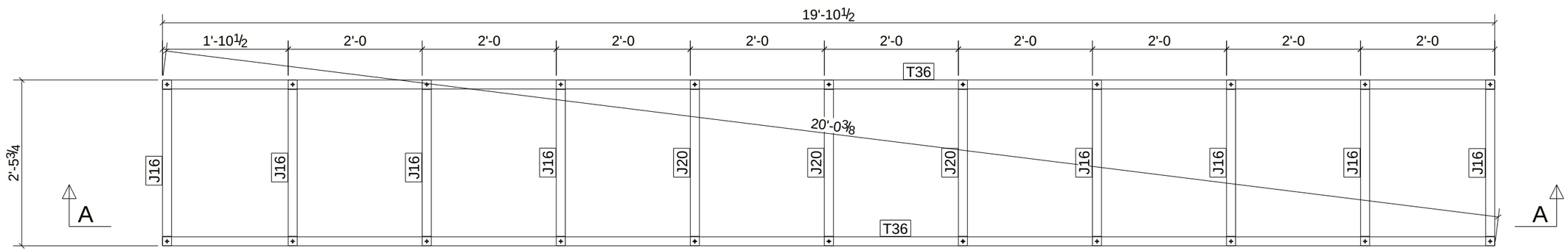


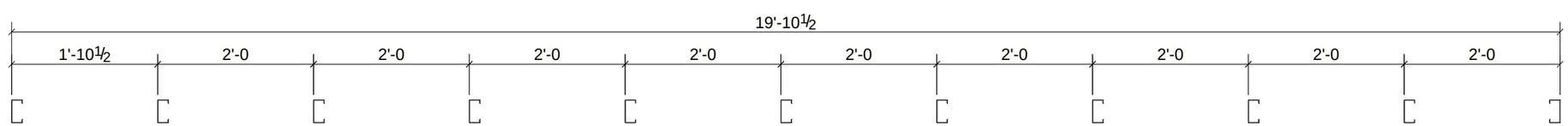


A - A

| REV | DESCRIPTION | DATE |
|---|---|---|
| | | |

| | | | |
|---|---|---|---|
| DESCRIPTION | | | |
| PROJECT NAME | | | |
| DRAWN BY | | JOB No. | DRG No. |
| DATE DRAWN | 07/16/2024 | | RP2 |

Tekla structures

# BILL OF MATERIAL

| MARK | QTY | DESCRIPTION | LENGTH | WEIGHT | REMARKS |
|---|---|---|---|---|---|
| B1 | 1 | BEAM | | | SQ-2 |
| FL8 | 1 | 550T150-68 | 18'-3 5/8" | 37.68 | A913-GR.50 |
| FL8 | 1 | 550T150-68 | 18'-3 5/8" | 37.68 | A913-GR.50 |
| W67 | 2 | 1400S250-97 | 18'-3 5/8" | 246.65 | A913-GR.50 |
| | | TOTAL WEIGHT THIS DRAWING | | 322 | |

FRONT VIEW

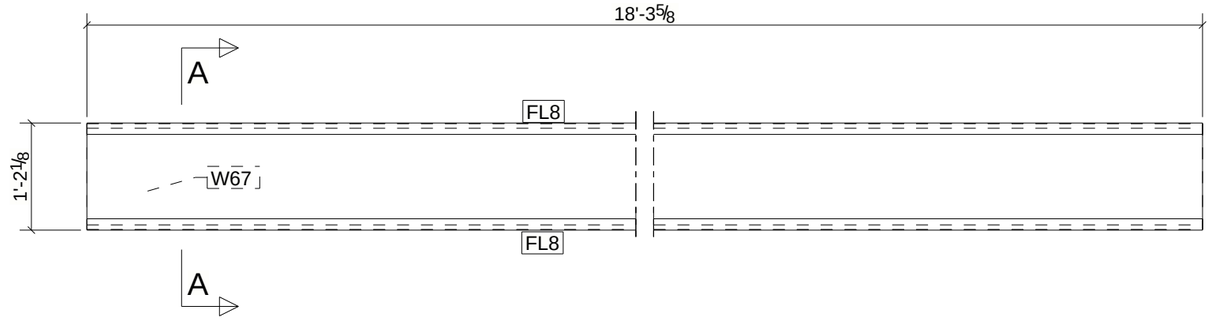


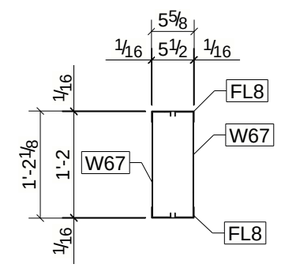


A - A

| REV | DESCRIPTION | DATE |
|---|---|---|
| | | |

| | | | |
|---|---|---|---|
| DESCRIPTION | | | |
| PROJECT NAME | | | |
| DRAWN BY | VN | JOB No. | DRG No. |
| DATE DRAWN | 07/11/2024 | | B1 |

Tekla structures

# BILL OF MATERIAL

| MARK | QTY | DESCRIPTION | LENGTH | WEIGHT | REMARKS |
|---|---|---|---|---|---|
| B2 | 1 | BEAM | | | SQ-2 |
| FL3 | 1 | 550T150-68 | 21'-11 11*** | 45.24 | A913-GR.50 |
| FL3 | 1 | 550T150-68 | 21'-11 11*** | 45.24 | A913-GR.50 |
| W9 | 2 | 1400S250-97 | 21'-11 11*** | 296.15 | A913-GR.50 |
| | | TOTAL WEIGHT THIS DRAWING | | 387 | |

FRONT VIEW

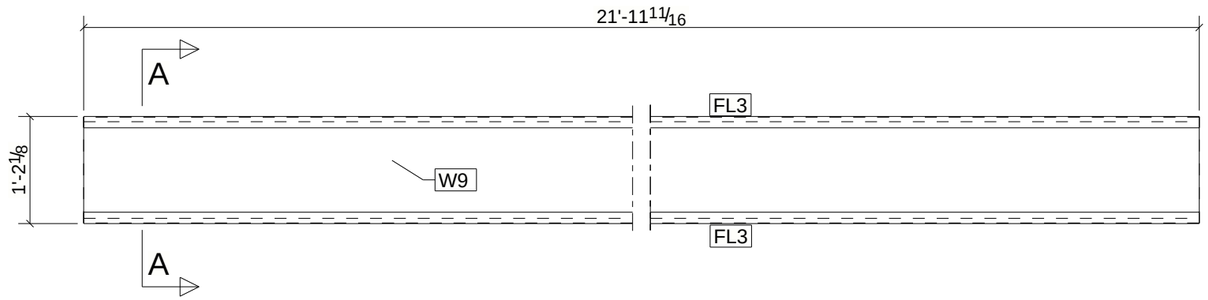


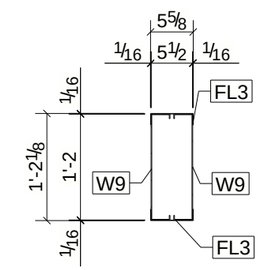


A - A

| REV | DESCRIPTION | DATE |
|---|---|---|
| | | |

| | | | |
|---|---|---|---|
| DESCRIPTION | | | |
| PROJECT NAME | | | |
| DRAWN BY | VN | JOB No. | DRG No. |
| DATE DRAWN | 07/11/2024 | | B2 |

Tekla structures

FRONT VIEW

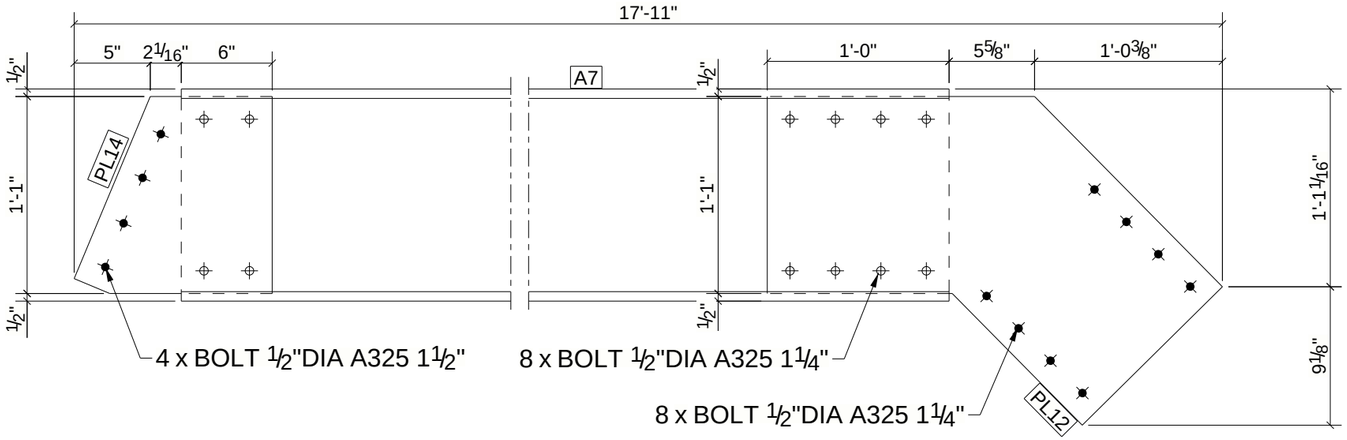


FRONT VIEW

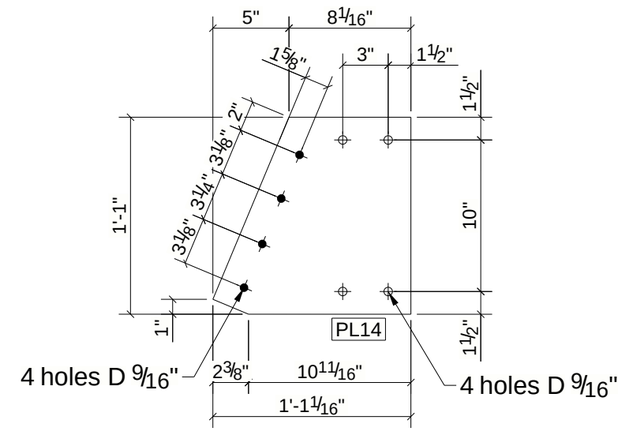


FRONT VIEW

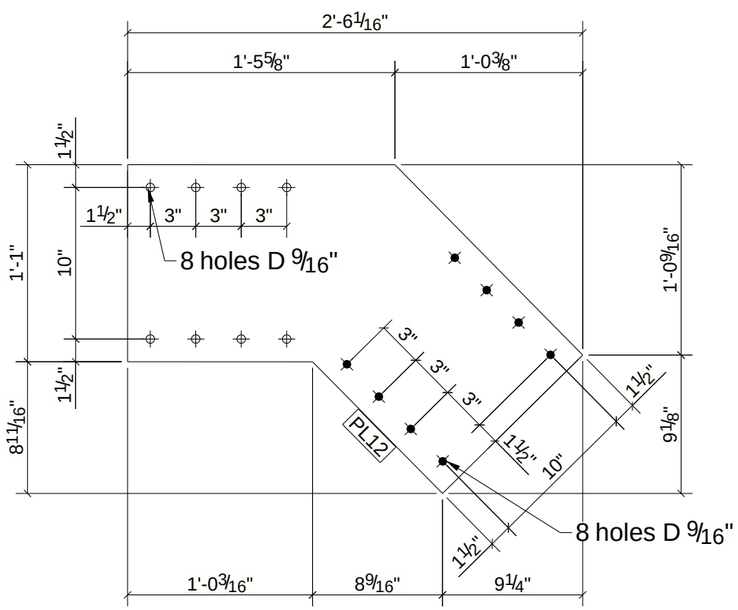


FRONT VIEW

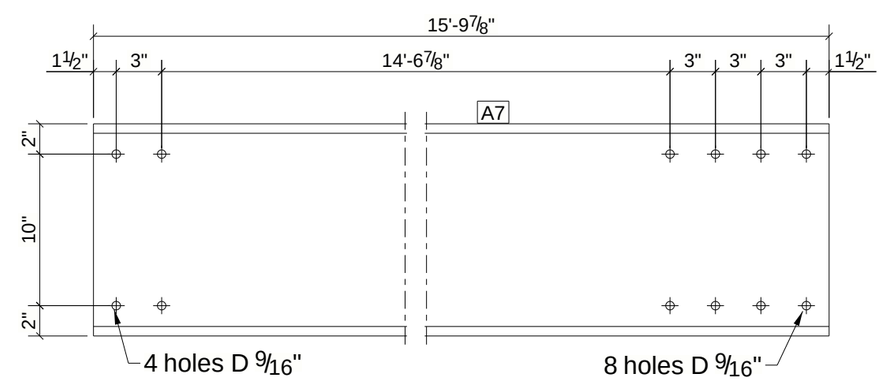


# BILL OF MATERIAL

| MARK | QTY | DESCRIPTION | LENGTH | WEIGHT | REMARKS |
|---|---|---|---|---|---|
| B3 | 22 | BEAMS | | | SQ-2 |
| A7 | 22 | 1400S250-97 | 15'-9 7/8" | 2345.74 | A913-GR.50 |
| PL12 | 22 | PL0.3125X21.6876 | 2'-6 1/16" | 756.70 | A36 |
| PL14 | 22 | PL0.3125X12.4372 | 1'-4 1/8" | 270.17 | A36 |
| | | TOTAL WEIGHT THIS DRAWING | | 3373 | |

1 1

| REV | DESCRIPTION | DATE |
|---|---|---|
| 1 | ROOF FRAMING UPDATE | 11/18/2024 |

| | | | |
|---|---|---|---|
| DESCRIPTION | | | |
| PROJECT NAME | | | |
| DRAWN BY | VN | JOB No. | DRG No. |
| DATE DRAWN | 11/18/2024 | | B3 |

Tekla structures

# BILL OF MATERIAL

| MARK | QTY | DESCRIPTION | LENGTH | WEIGHT | REMARKS |
|---|---|---|---|---|---|
| B4 | 1 | BEAM | | | SQ-2 |
| FL1 | 1 | 550T150-68 | 27'-0 13/16" | 55.74 | A913-GR.50 |
| FL1 | 1 | 550T150-68 | 27'-0 13/16" | 55.74 | A913-GR.50 |
| W3 | 2 | 1400S250-97 | 27'-0 13/16" | 364.82 | A913-GR.50 |
| | | TOTAL WEIGHT THIS DRAWING | | 476 | |

FRONT VIEW

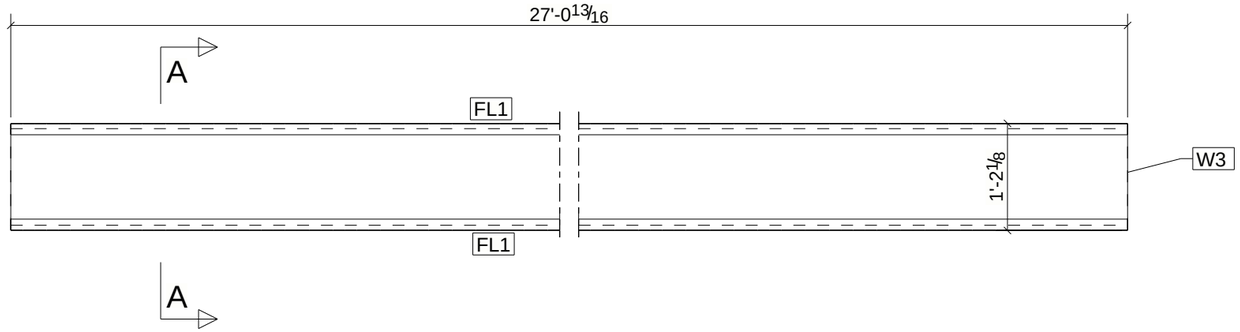


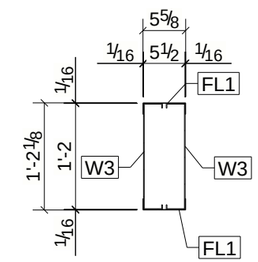


A - A

| REV | DESCRIPTION | DATE |
|---|---|---|
| | | |

| | | | |
|---|---|---|---|
| DESCRIPTION | | | |
| PROJECT NAME | | | |
| DRAWN BY | VN | JOB No. | DRG No. |
| DATE DRAWN | 07/11/2024 | | B4 |

Tekla structures

# BILL OF MATERIAL

| MARK | QTY | DESCRIPTION | LENGTH | WEIGHT | REMARKS |
|---|---|---|---|---|---|
| B5 | 1 | BEAM | | | SQ-2 |
| W59 | 1 | 1200S250-68 | 14'-7 1/4" | 62.77 | A913-GR.50 |
| A1 | 3 | L3X3X5/16 | 1'-0 1/2" | 18.93 | A992 |
| A9 | 4 | L3X3X5/16 | 1'-0 1/2" | 25.24 | A992 |
| FL7 | 2 | 550T150-68 | 14'-7 1/4" | 60.13 | A913-GR.50 |
| W64 | 1 | 1200S250-68 | 14'-7 1/4" | 62.77 | A913-GR.50 |
| | | TOTAL WEIGHT THIS DRAWING | | 230 | |

FRONT VIEW

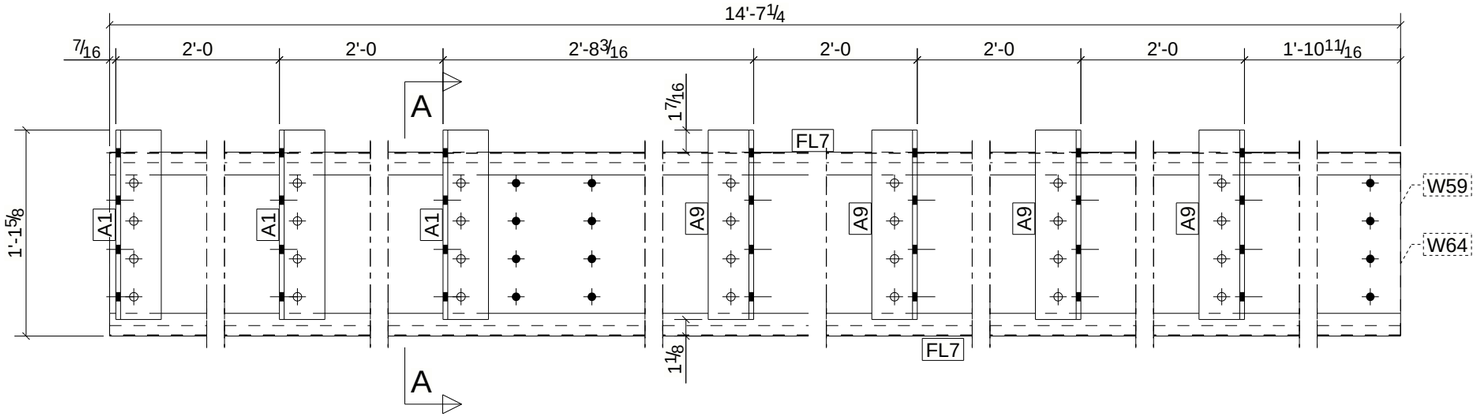


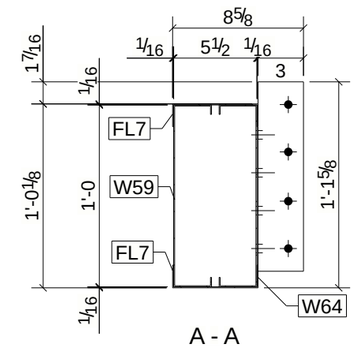


A - A

TOP VIEW

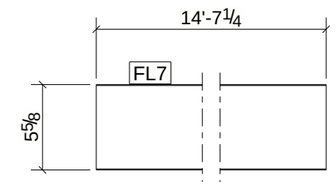


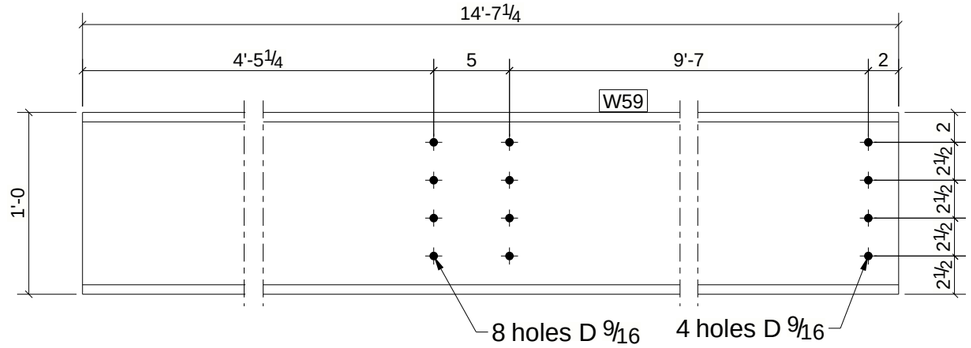


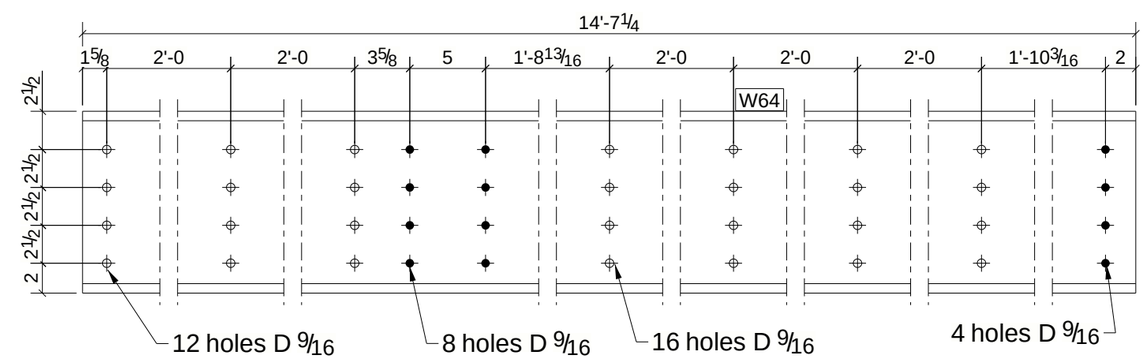


SIDE VIEW

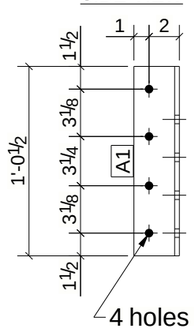


FRONT VIEW

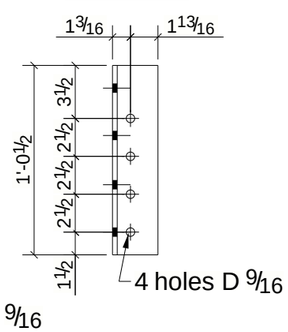


SIDE VIEW

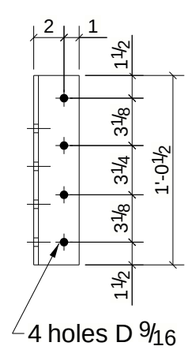


FRONT VIEW

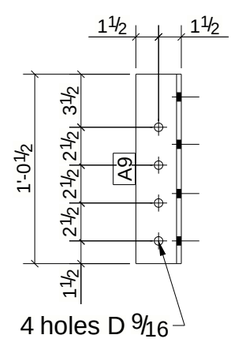


| REV | DESCRIPTION | DATE |
|---|---|---|
| | | |

| | | | |
|---|---|---|---|
| DESCRIPTION | | | |
| PROJECT NAME | | | |
| DRAWN BY | VN | JOB No. | DRG No. |
| DATE DRAWN | 07/18/2024 | | B5 |

Tekla structures

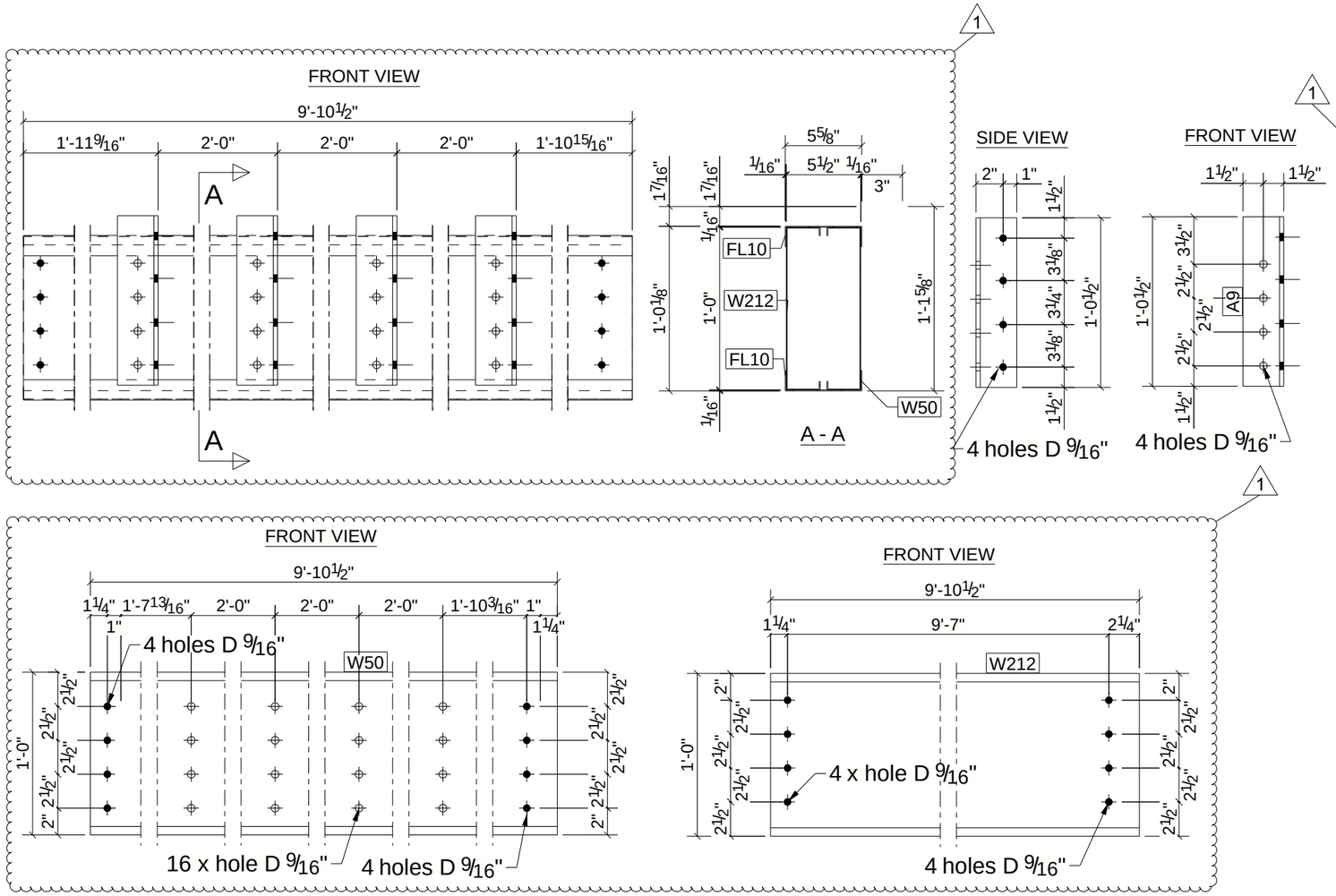





# BILL OF MATERIAL

| MARK | QTY | DESCRIPTION | LENGTH | WEIGHT | REMARKS |
|---|---|---|---|---|---|
| B6 | 1 | BEAM | | | SQ-2 |
| W212 | 1 | 1200S250-68 | 9'-10 1/2" | 42.45 | A913-GR.50 |
| A9 | 4 | L3X3X5/16 | 1'-0 1/2" | 25.24 | A992 |
| FL10 | 2 | 550T150-68 | 9'-10 1/2" | 40.66 | A913-GR.50 |
| W50 | 1 | 1200S250-68 | 9'-10 1/2" | 42.45 | A913-GR.50 |
| | | TOTAL WEIGHT THIS DRAWING | | 151 | |

| REV | DESCRIPTION | DATE |
|---|---|---|
| 1 | ROOF FRAMING UPDATE | 11/18/2024 |

| | | | |
|---|---|---|---|
| DESCRIPTION | | | |
| PROJECT NAME | | | |
| DRAWN BY | VN | JOB No. | DRG No. |
| DATE DRAWN | 11/18/2024 | | B6 |

Tekla structures

# BILL OF MATERIAL

| MARK | QTY | DESCRIPTION | LENGTH | WEIGHT | REMARKS |
|---|---|---|---|---|---|
| B7 | 1 | BEAM | | | SQ-2 |
| W36 | 1 | 1200S250-68 | 14'-7 9/16" | 62.89 | A913-GR.50 |
| A9 | 7 | L3X3X5/16 | 1'-0 1/2" | 44.17 | A992 |
| FL5 | 2 | 550T150-68 | 14'-7 9/16" | 60.25 | A913-GR.50 |
| W41 | 1 | 1200S250-68 | 14'-7 9/16" | 62.89 | A913-GR.50 |
| | | TOTAL WEIGHT THIS DRAWING | | 230 | |

FRONT VIEW

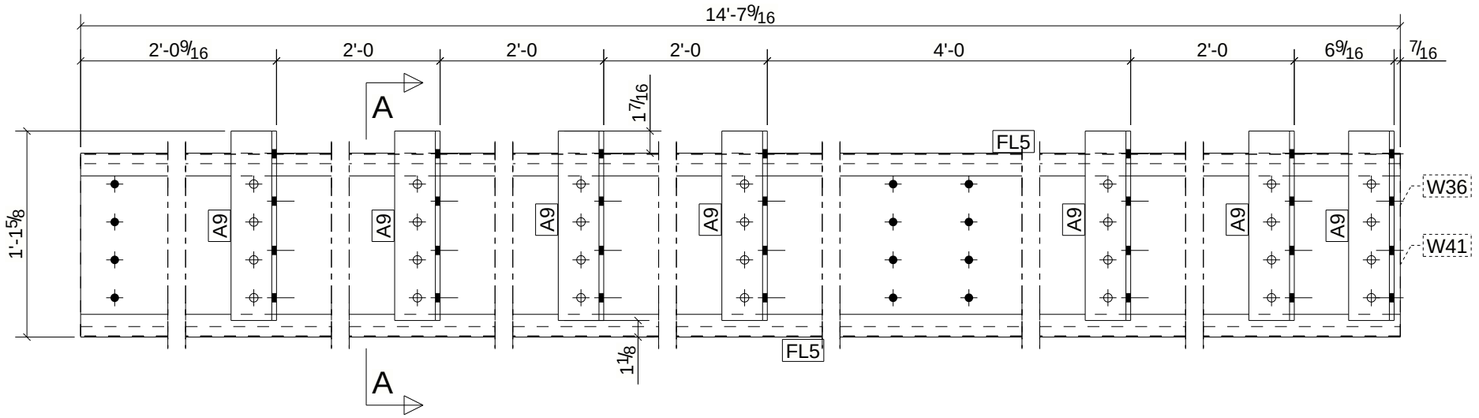


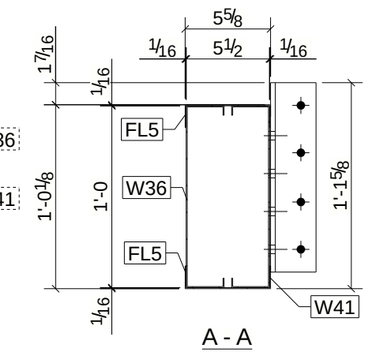


A - A

SIDE VIEW

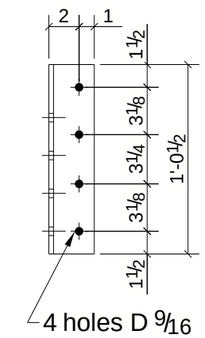


FRONT VIEW

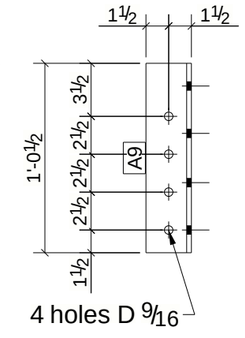


FRONT VIEW

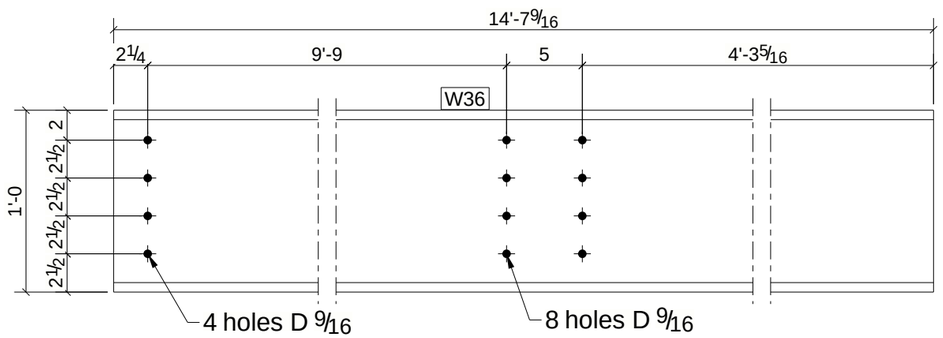


FRONT VIEW

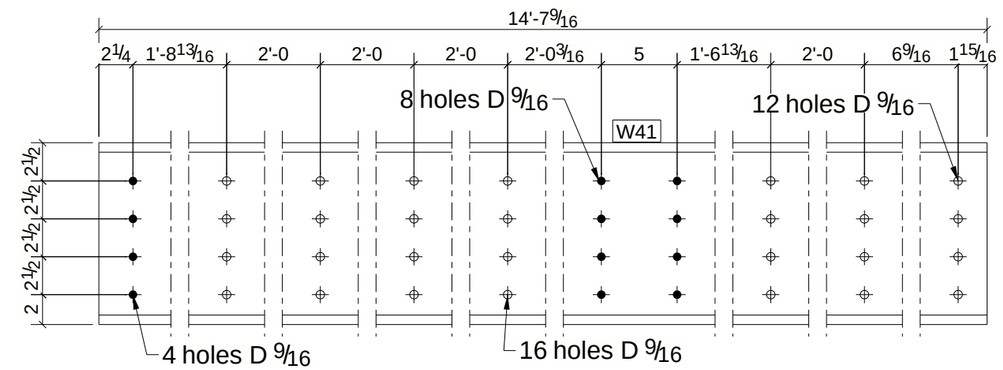


TOP VIEW

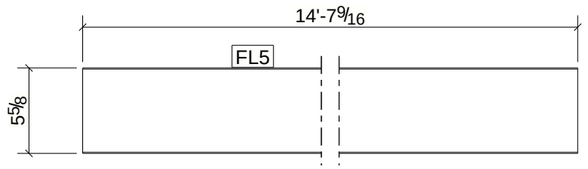


| REV | DESCRIPTION | DATE |
|---|---|---|
| | | |

| | | | |
|---|---|---|---|
| DESCRIPTION | | | |
| PROJECT NAME | | | |
| DRAWN BY | VN | JOB No. | DRG No. |
| DATE DRAWN | 07/18/2024 | | B7 |

Tekla structures

# BILL OF MATERIAL

| MARK | QTY | DESCRIPTION | LENGTH | WEIGHT | REMARKS |
|---|---|---|---|---|---|
| B8 | 17 | BEAMS | | | SQ-2 |
| A4 | 17 | 1400S250-97 | 16'-1 5/8" | 1848.63 | A913-GR.50 |
| PL15 | 17 | PL0.3125X12.9369 | 1'-1" | 206.34 | A36 |
| | | TOTAL WEIGHT THIS DRAWING | | 2055 | |

FRONT VIEW

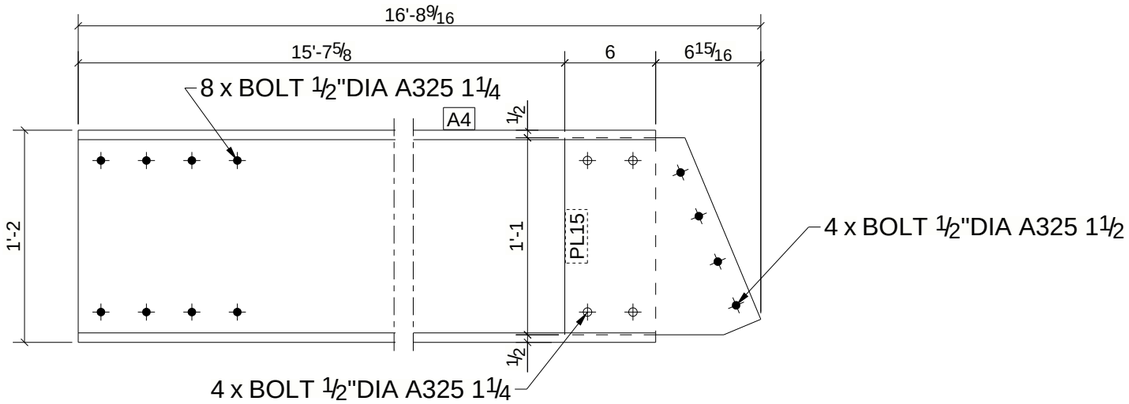


FRONT VIEW

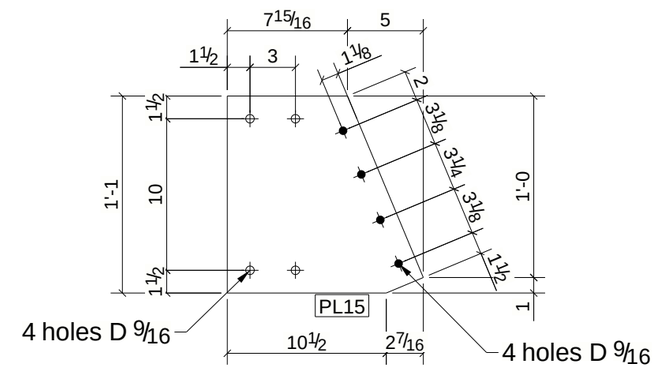


FRONT VIEW

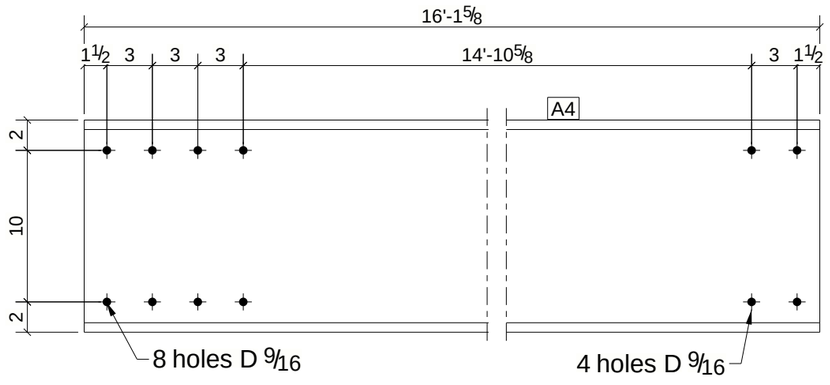


| REV | DESCRIPTION | DATE |
|---|---|---|
| | | |

| | | | |
|---|---|---|---|
| DESCRIPTION | | | |
| PROJECT NAME | | | |
| DRAWN BY | VN | JOB No. | DRG No. |
| DATE DRAWN | 07/18/2024 | | B8 |

Tekla structures

# BILL OF MATERIAL

| MARK | QTY | DESCRIPTION | LENGTH | WEIGHT | REMARKS |
|---|---|---|---|---|---|
| B9 | 1 | BEAM | | | SQ-2 |
| W45 | 1 | 1200S250-68 | 19'-11 1/2" | 85.79 | A913-GR.50 |
| A9 | 7 | L3X3X5/16 | 1'-0 1/2" | 44.17 | A992 |
| A10 | 1 | L3X3X5/16 | 1'-0 1/2" | 6.31 | A992 |
| FL6 | 2 | 550T150-68 | 19'-11 1/2" | 82.19 | A913-GR.50 |
| W70 | 1 | 1200S250-68 | 19'-11 1/2" | 85.79 | A913-GR.50 |
| | | TOTAL WEIGHT THIS DRAWING | | 304 | |

FRONT VIEW

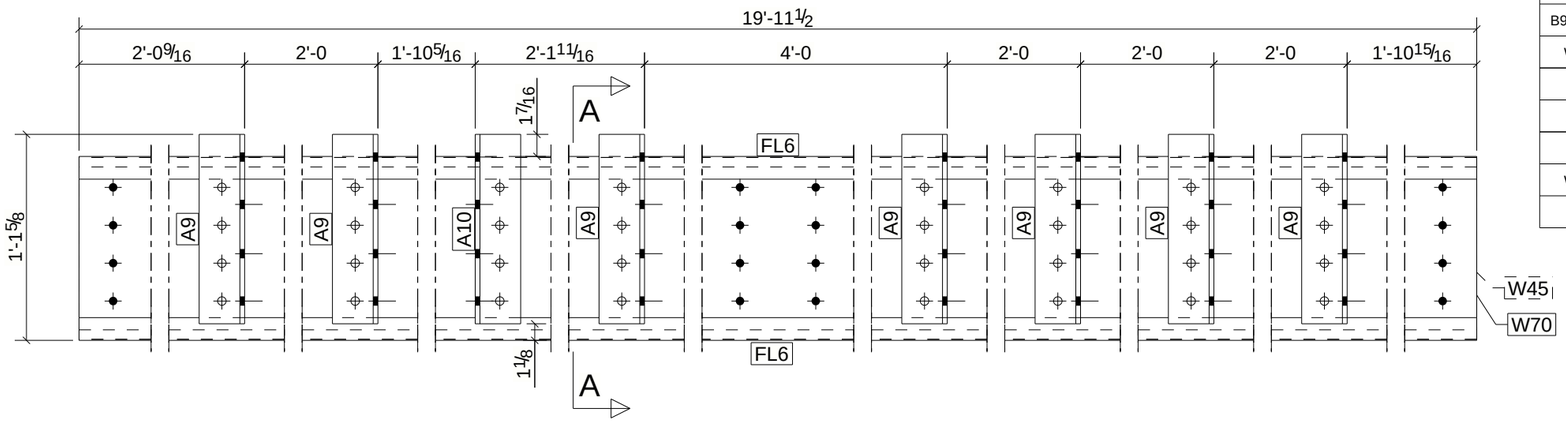


FRONT VIEW

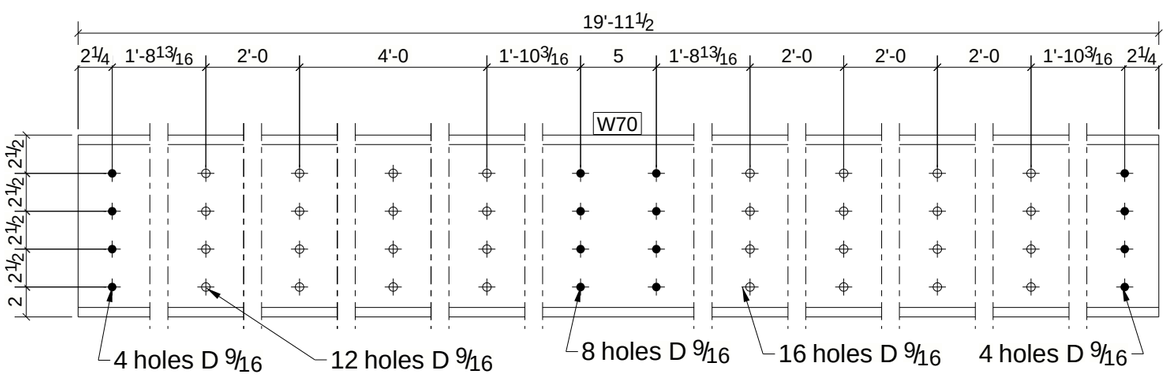


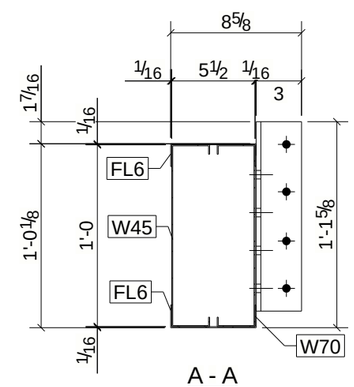


A - A

SIDE VIEW

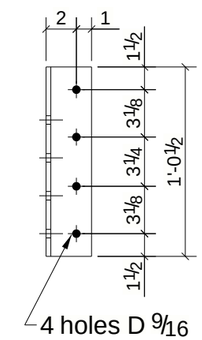


FRONT VIEW

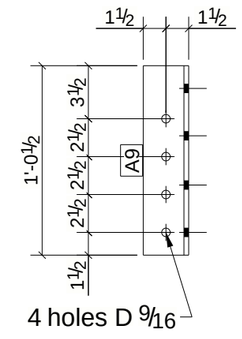


SIDE VIEW

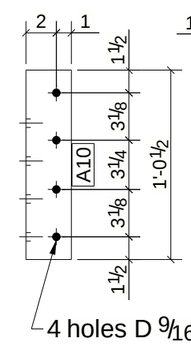


FRONT VIEW

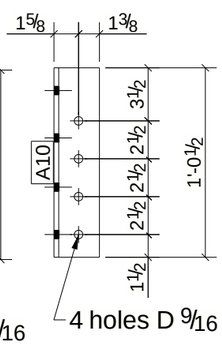


FRONT VIEW

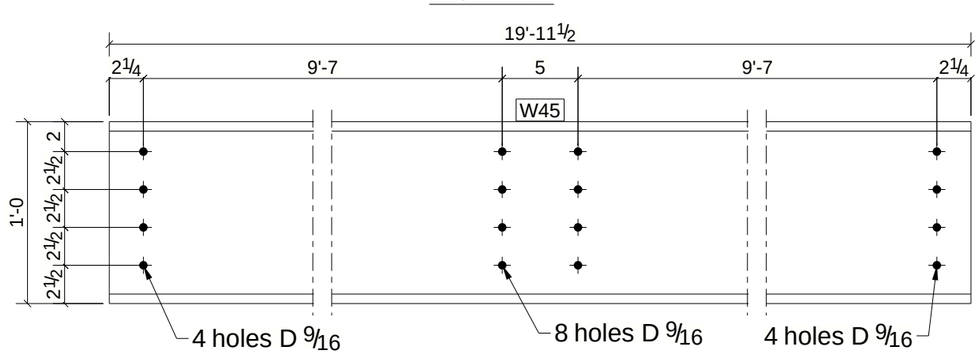


TOP VIEW

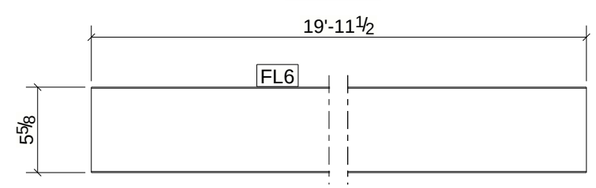


| REV | DESCRIPTION | DATE |
|---|---|---|
| | | |

| | | | |
|---|---|---|---|
| DESCRIPTION | | | |
| PROJECT NAME | | | |
| DRAWN BY | VN | JOB No. | DRG No. |
| DATE DRAWN | 07/18/2024 | | B9 |

Tekla structures

# BILL OF MATERIAL

| MARK | QTY | DESCRIPTION | LENGTH | WEIGHT | REMARKS |
|---|---|---|---|---|---|
| B10 | 14 | BEAMS | | | SQ-2 |
| A6 | 14 | 1400S250-97 | 16'-3 13/16" | 1539.50 | A913-GR.50 |
| PL13 | 14 | PL0.3125X11.8509 | 1'-4 11/16" | 182.44 | A36 |
| | | TOTAL WEIGHT THIS DRAWING | | 1722 | |

FRONT VIEW

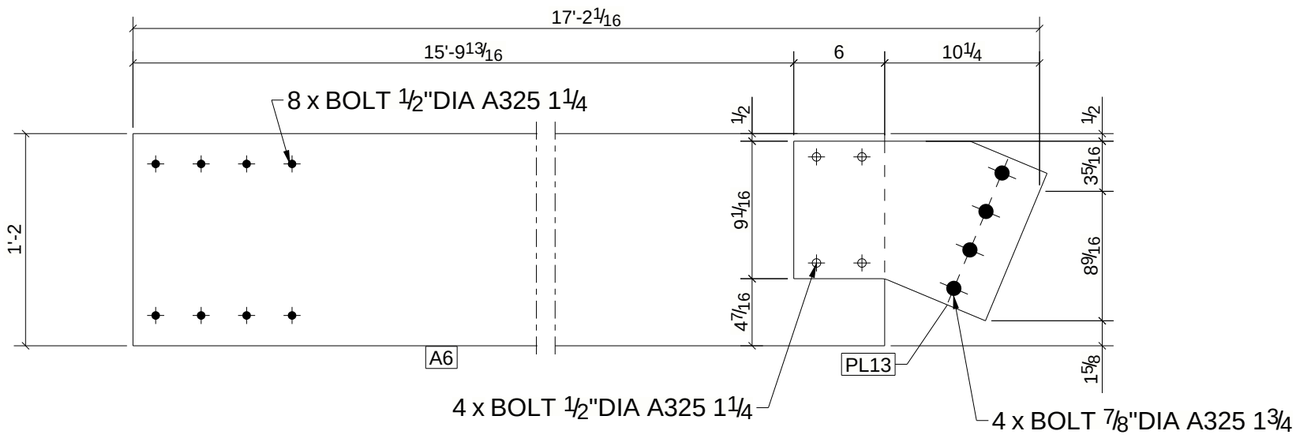


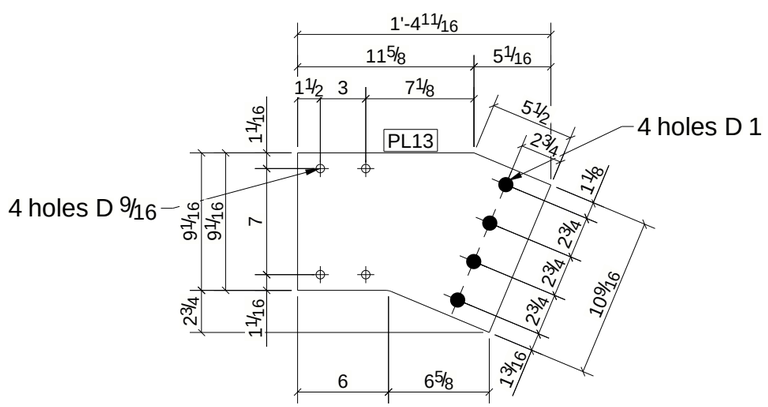


FRONT VIEW

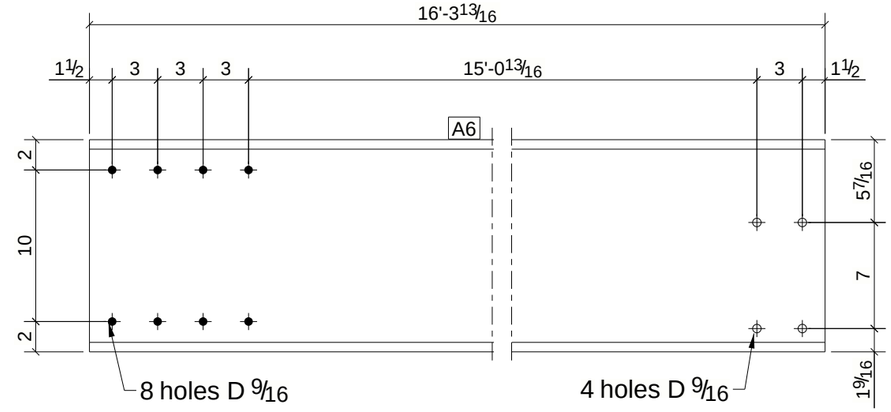


| REV | DESCRIPTION | DATE |
|---|---|---|
| | | |

| | | | |
|---|---|---|---|
| DESCRIPTION | | | |
| PROJECT NAME | | | |
| DRAWN BY | VN | JOB No. | DRG No. |
| DATE DRAWN | 07/19/2024 | | B10 |

Tekla structures

# BILL OF MATERIAL

| MARK | QTY | DESCRIPTION | LENGTH | WEIGHT | REMARKS |
|---|---|---|---|---|---|
| B11 | 1 | BEAM | | | SQ-2 |
| W443 | 1 | 1200S250-68 | 8'-11 1/2" | 38.51 | A913-GR.50 |
| A9 | 4 | L3X3X5/16 | 1'-0 1/2" | 25.24 | A992 |
| FL11 | 2 | 550T150-68 | 8'-11 1/2" | 36.89 | A913-GR.50 |
| W610 | 1 | 1200S250-68 | 8'-11 1/2" | 38.51 | A913-GR.50 |
| | | TOTAL WEIGHT THIS DRAWING | | 139 | |

FRONT VIEW

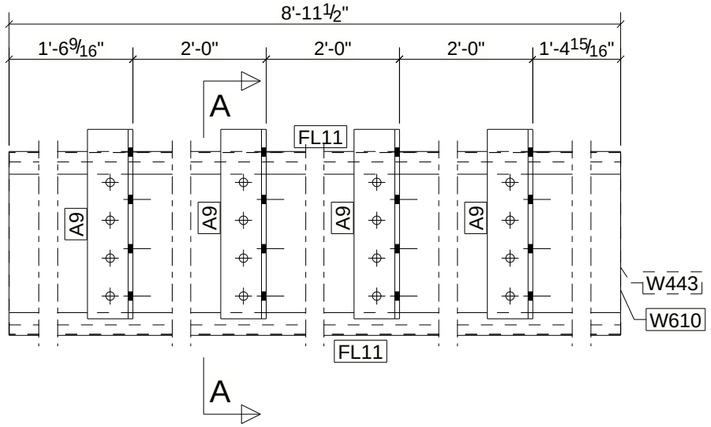


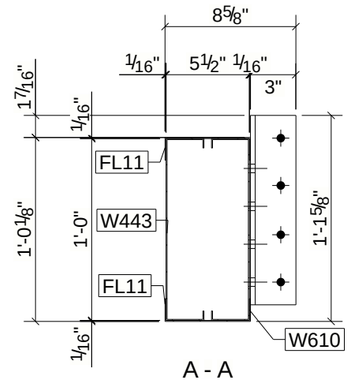


A - A

TOP VIEW

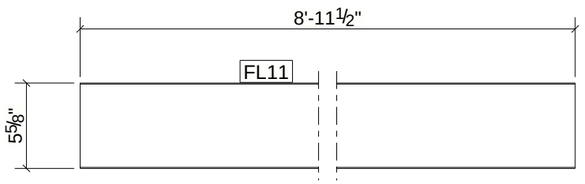


FRONT VIEW

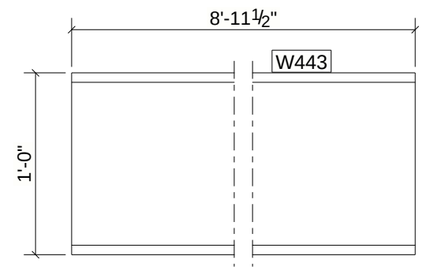


SIDE VIEW

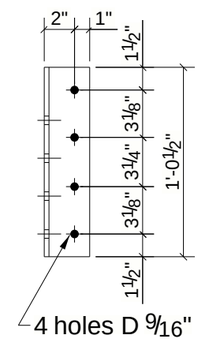


FRONT VIEW

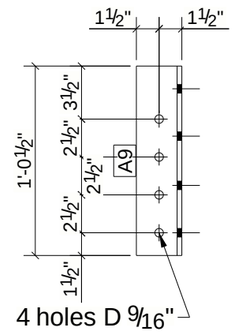


FRONT VIEW

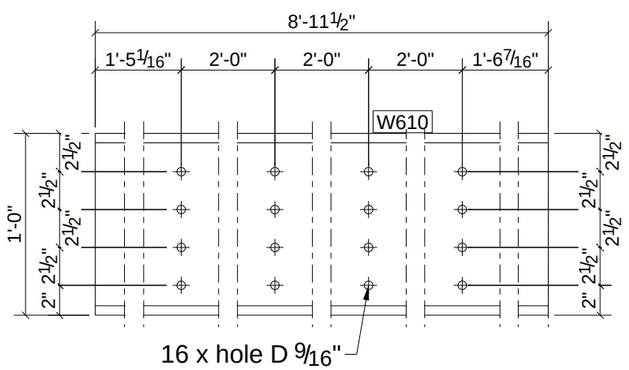


| REV | DESCRIPTION | DATE |
|---|---|---|
| 1 | ROOF FRAMING UPDATE | 11/18/2024 |

| | | | |
|---|---|---|---|
| DESCRIPTION | | | |
| PROJECT NAME | | | |
| DRAWN BY | VN | JOB No. | DRG No. |
| DATE DRAWN | 11/18/2024 | | B11 |

Tekla structures

# BILL OF MATERIAL

| MARK | QTY | DESCRIPTION | LENGTH | WEIGHT | REMARKS |
|---|---|---|---|---|---|
| B12 | 4 | BEAMS | | | SQ-2 |
| A7 | 4 | 1400S250-97 | 15'-9 7/8" | 426.50 | A913-GR.50 |
| PL12 | 4 | PL0.3125X21.6876 | 2'-6 1/16" | 137.58 | A36 |
| PL14 | 4 | PL0.3125X12.4372 | 1'-4 1/8" | 49.12 | A36 |
| | | TOTAL WEIGHT THIS DRAWING | | 613 | |

FRONT VIEW

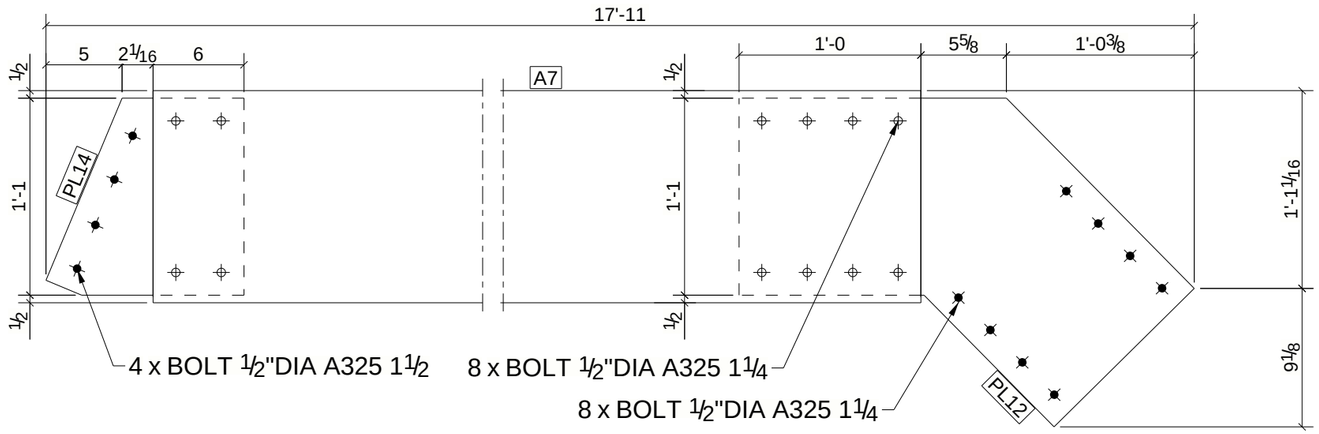


FRONT VIEW

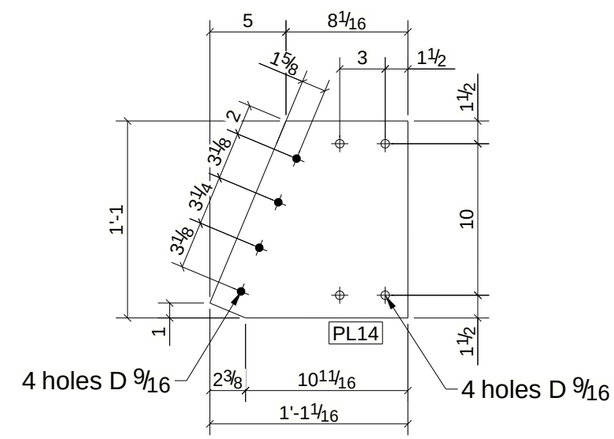


FRONT VIEW

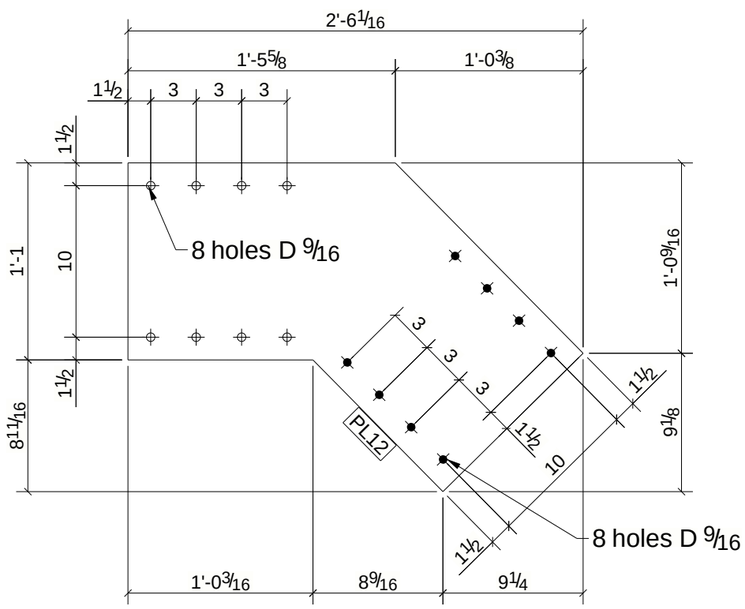


FRONT VIEW

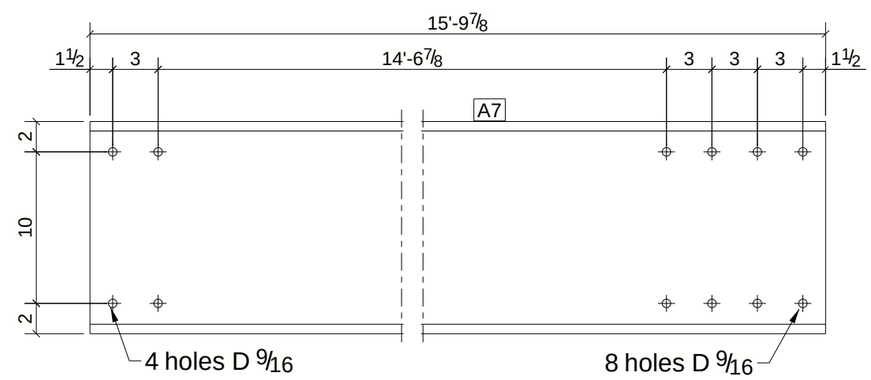


| REV | DESCRIPTION | DATE |
|---|---|---|
| | | |

| | | | |
|---|---|---|---|
| DESCRIPTION | | | |
| PROJECT NAME | | | |
| DRAWN BY | VN | JOB No. | DRG No. |
| DATE DRAWN | 07/18/2024 | | B12 |

Tekla structures

# BILL OF MATERIAL

| MARK | QTY | DESCRIPTION | LENGTH | WEIGHT | REMARKS |
|---|---|---|---|---|---|
| B13 | 4 | BEAMS | | | SQ-2 |
| A5 | 4 | 1400S250-97 | 14'-6 5/8" | 392.25 | A913-GR.50 |
| PL12 | 4 | PL0.3125X21.6876 | 2'-6 1/16" | 137.58 | A36 |
| PL14 | 4 | PL0.3125X12.4372 | 1'-4 1/8" | 49.12 | A36 |
| | | TOTAL WEIGHT THIS DRAWING | | 579 | |

FRONT VIEW

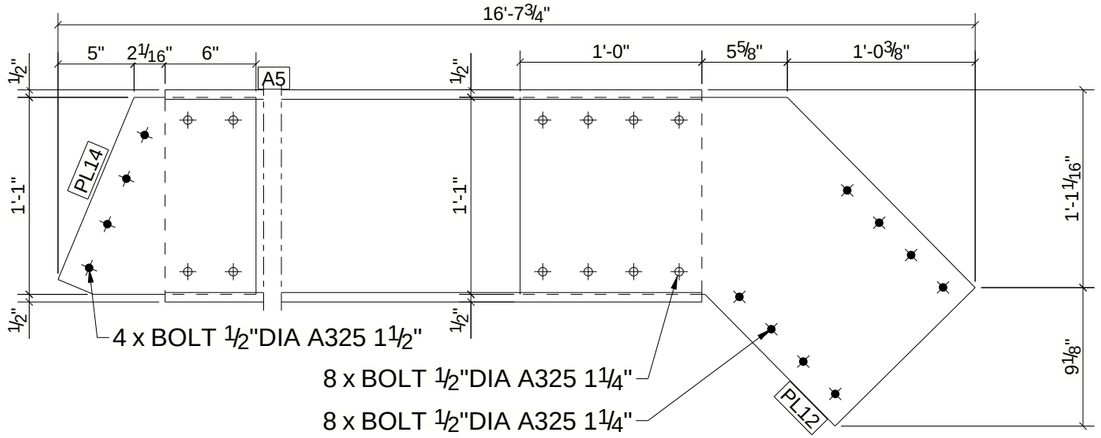


FRONT VIEW

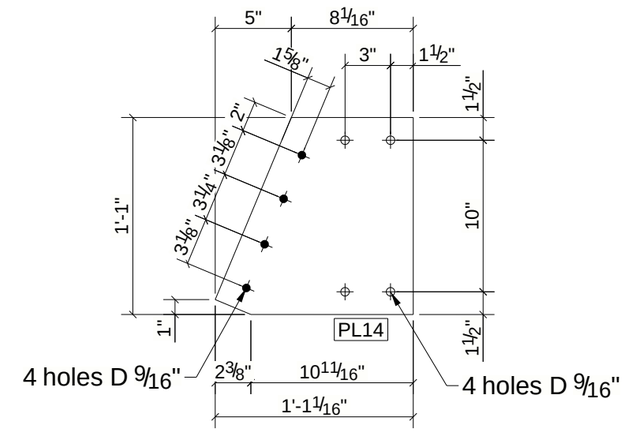


FRONT VIEW

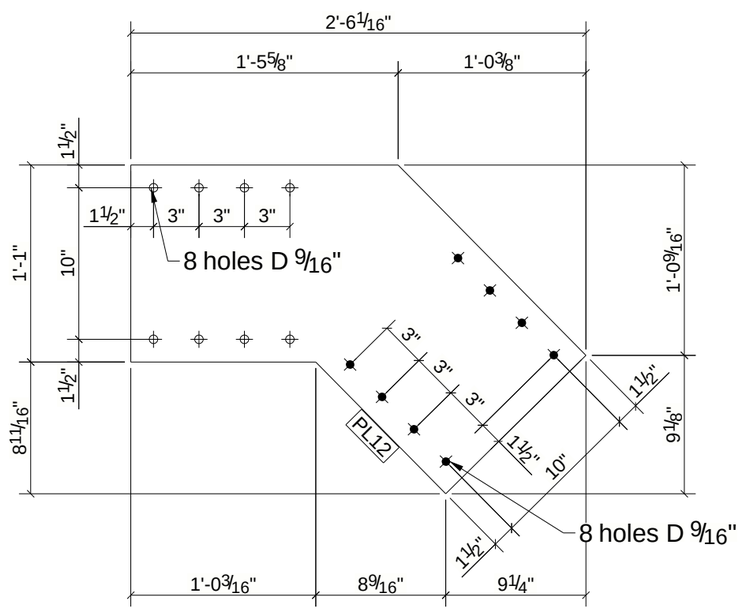


FRONT VIEW

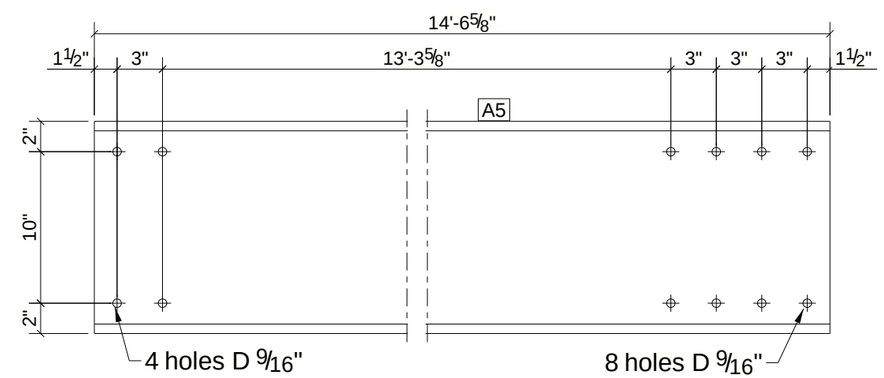


| REV | DESCRIPTION | DATE |
|---|---|---|
| 1 | ROOF FRAMING UPDATE | 11/18/2024 |

| | | | |
|---|---|---|---|
| DESCRIPTION | | | |
| PROJECT NAME | | | |
| DRAWN BY | VN | JOB No. | DRG No. |
| DATE DRAWN | 11/18/2024 | | B13 |

Tekla structures

# BILL OF MATERIAL

| MARK | QTY | DESCRIPTION | LENGTH | WEIGHT | REMARKS |
|---|---|---|---|---|---|
| B19 | 1 | BEAM | | | SQ-2 |
| W69 | 1 | 1200S250-68 | 14'-7 1/2" | 62.86 | A913-GR.50 |
| A2 | 8 | L3X3X5/16 | 1'-0 1/2" | 50.48 | A992 |
| FL9 | 2 | 550T150-68 | 14'-7 1/2" | 60.22 | A913-GR.50 |
| W68 | 1 | 1200S250-68 | 14'-7 1/2" | 62.86 | A913-GR.50 |
| | | TOTAL WEIGHT THIS DRAWING | | 236 | |

FRONT VIEW

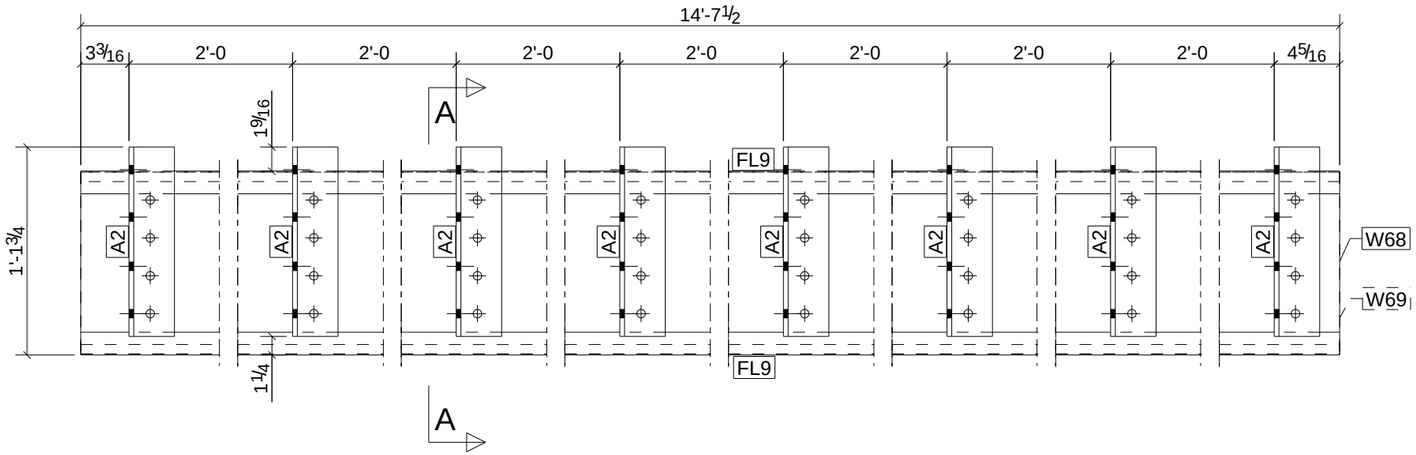


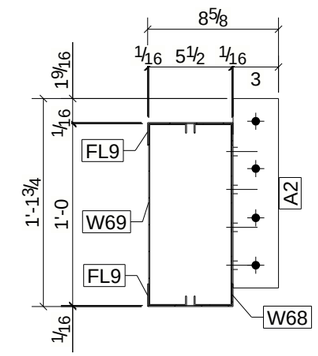


A - A

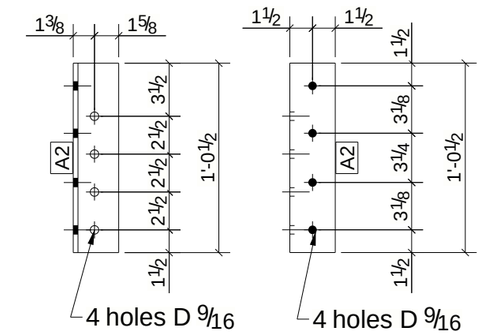


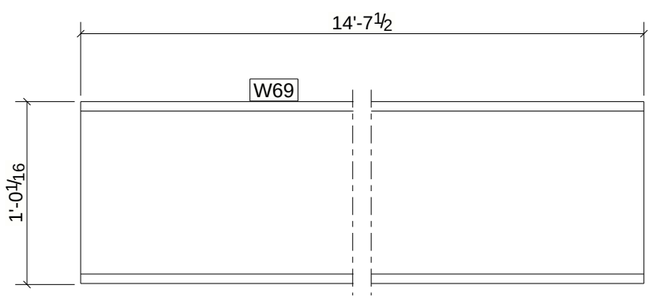


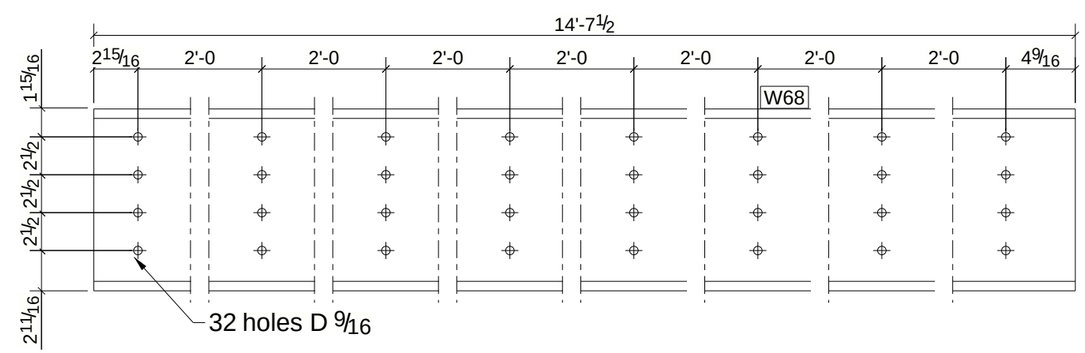


FRONT VIEW

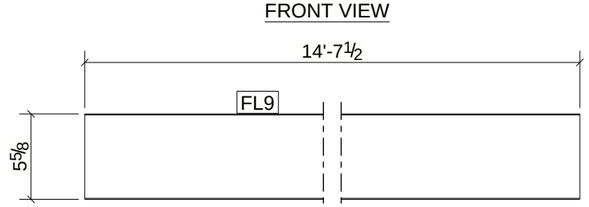


| REV | DESCRIPTION | DATE |
|---|---|---|
| | | |

| | | | |
|---|---|---|---|
| DESCRIPTION | | | |
| PROJECT NAME | | | |
| DRAWN BY | VN | JOB No. | DRG No. |
| DATE DRAWN | 07/18/2024 | | B19 |

Tekla structures

# BILL OF MATERIAL

| MARK | QTY | DESCRIPTION | LENGTH | WEIGHT | REMARKS |
|---|---|---|---|---|---|
| B21 | 1 | BEAM | | | SQ-2 |
| W32 | 1 | 1200S250-97 | 20'-6 1/8" | 124.16 | A913-GR.50 |
| A2 | 9 | L3X3X5/16 | 1'-0 1/2" | 56.79 | A992 |
| FL4 | 2 | 550T150-97 | 20'-6 1/8" | 120.32 | A913-GR.50 |
| W20 | 1 | 1200S250-97 | 20'-6 1/8" | 124.16 | A913-GR.50 |
| | | TOTAL WEIGHT THIS DRAWING | | 425 | |

FRONT VIEW

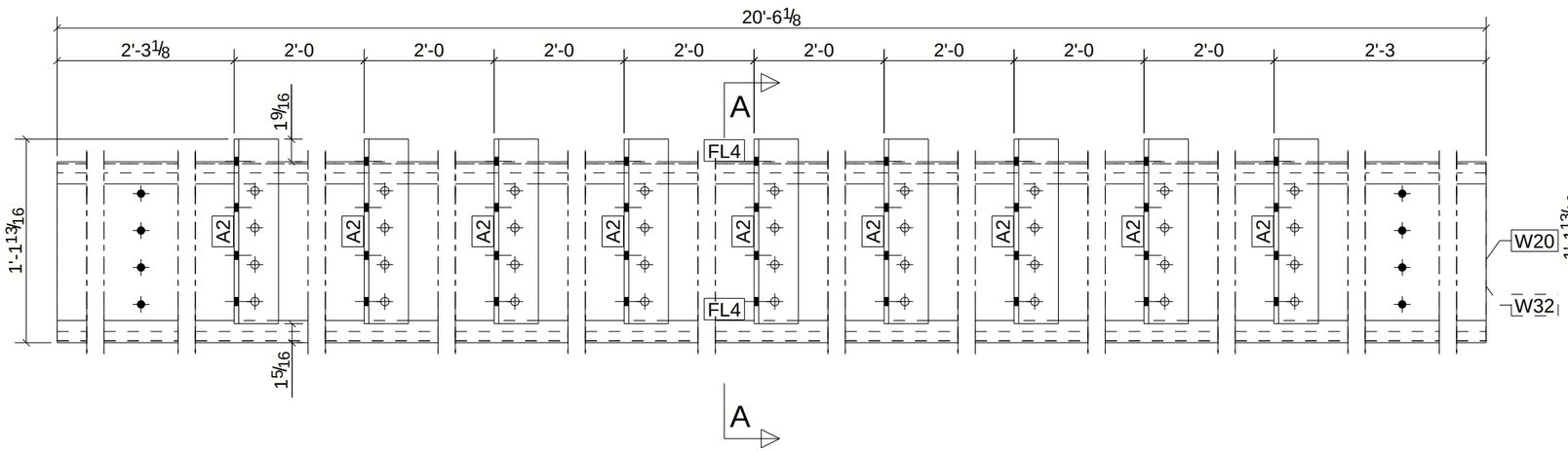


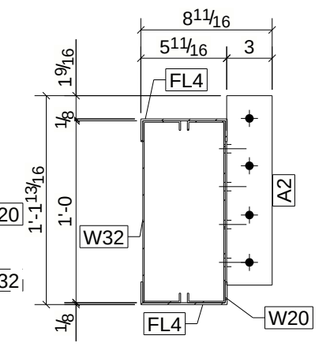


A - A

FRONT VIEW

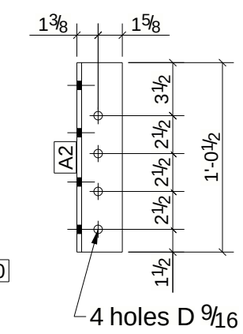


SIDE VIEW

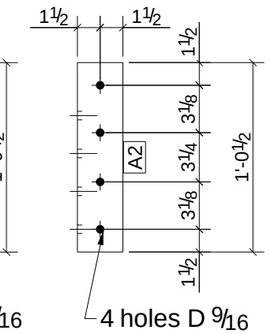


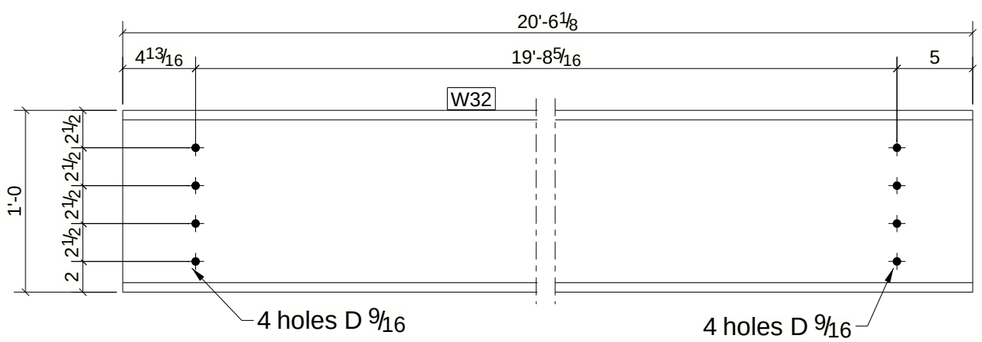


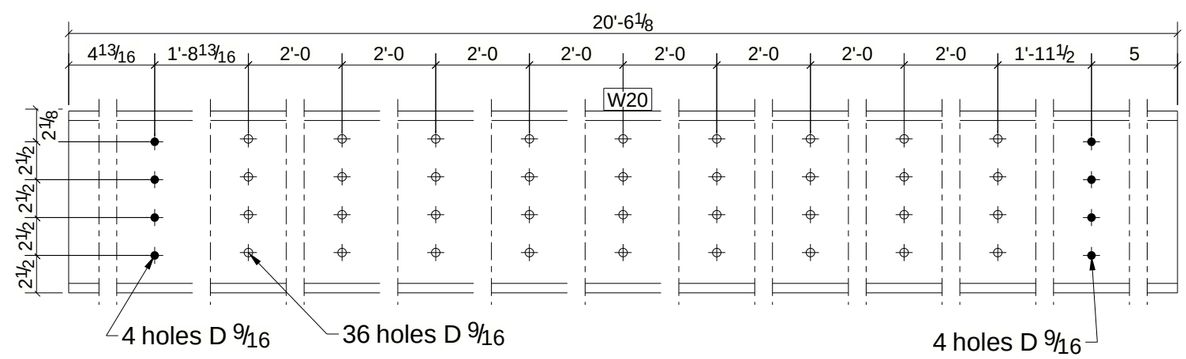


FRONT VIEW

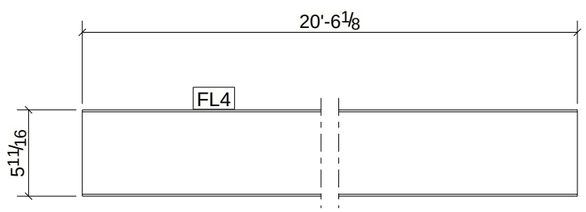


| REV | DESCRIPTION | DATE |
|---|---|---|
| | | |

| | | | |
|---|---|---|---|
| DESCRIPTION | | | |
| PROJECT NAME | | | |
| DRAWN BY | VN | JOB No. | DRG No. |
| DATE DRAWN | 07/18/2024 | | B21 |

Tekla structures

# BILL OF MATERIAL

| MARK | QTY | DESCRIPTION | LENGTH | WEIGHT | REMARKS |
|---|---|---|---|---|---|
| B24 | 7 | BEAMS | | | SQ-2 |
| A3 | 7 | 1400S250-97 | 15'-9 7/8" | 746.37 | A913-GR.50 |
| PL12 | 7 | PL0.3125X21.6876 | 2'-6 1/16" | 240.77 | A36 |
| | | TOTAL WEIGHT THIS DRAWING | | 987 | |

FRONT VIEW

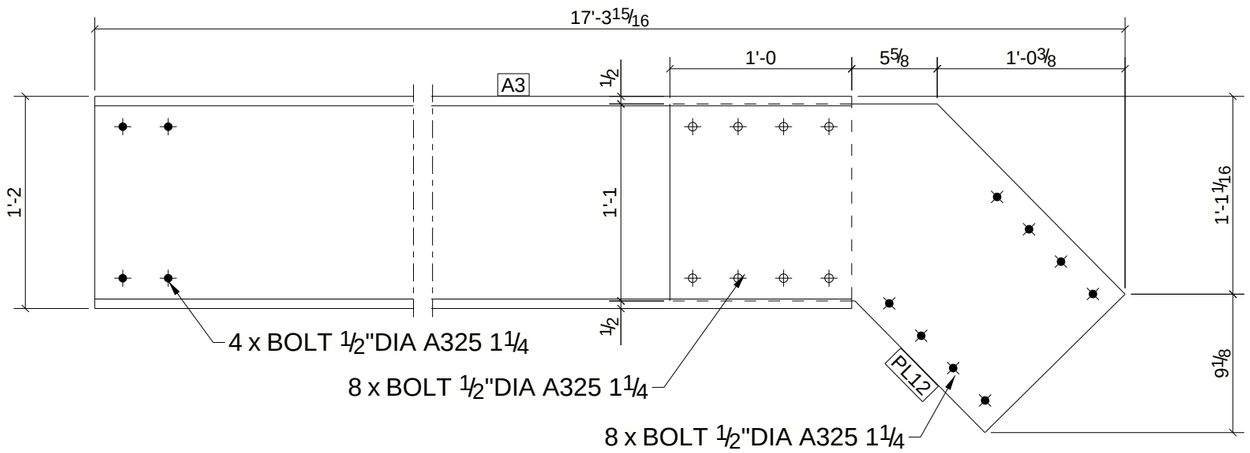


FRONT VIEW

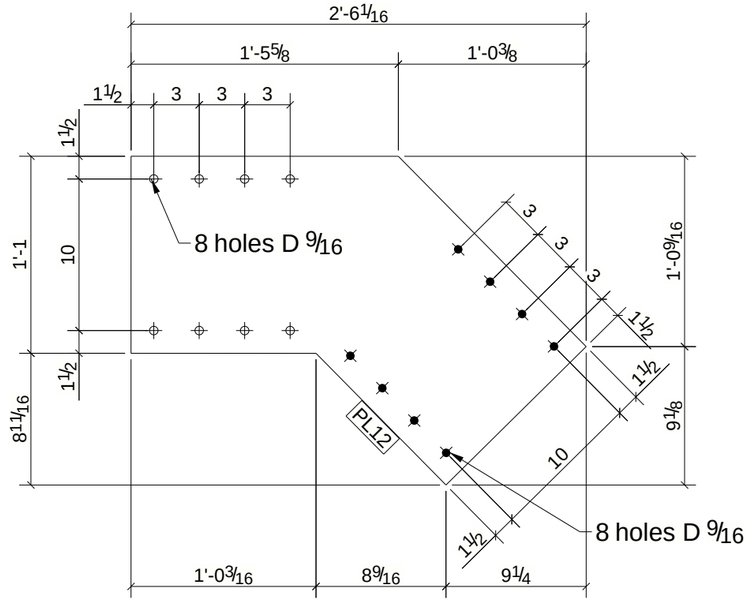


FRONT VIEW

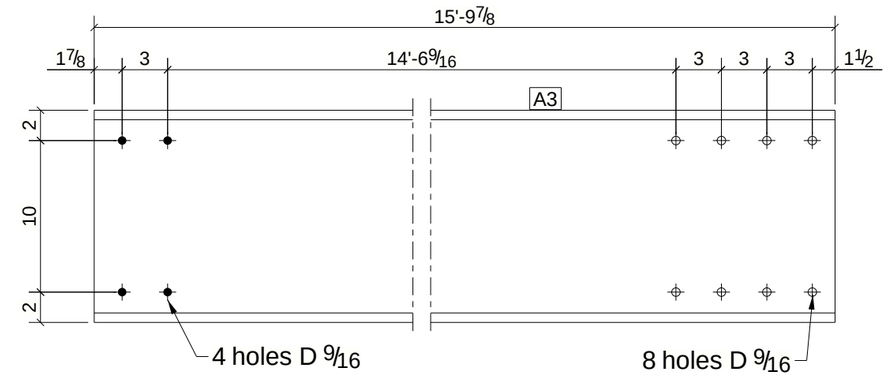


| REV | DESCRIPTION | DATE |
|---|---|---|
| | | |

| | | | |
|---|---|---|---|
| DESCRIPTION | | | |
| PROJECT NAME | | | |
| DRAWN BY | VN | JOB No. | DRG No. |
| DATE DRAWN | 07/11/2024 | | B24 |

Tekla structures

# BILL OF MATERIAL

| MARK | QTY | DESCRIPTION | LENGTH | WEIGHT | REMARKS |
|---|---|---|---|---|---|
| B26 | 4 | BEAMS | | | SQ-2 |
| A8 | 4 | 1400S250-97 | 16'-3 13/16" | 439.86 | A913-GR.50 |
| PL13 | 4 | PL0.3125X11.8509 | 1'-4 11/16" | 52.13 | A36 |
| | | TOTAL WEIGHT THIS DRAWING | | 492 | |

FRONT VIEW

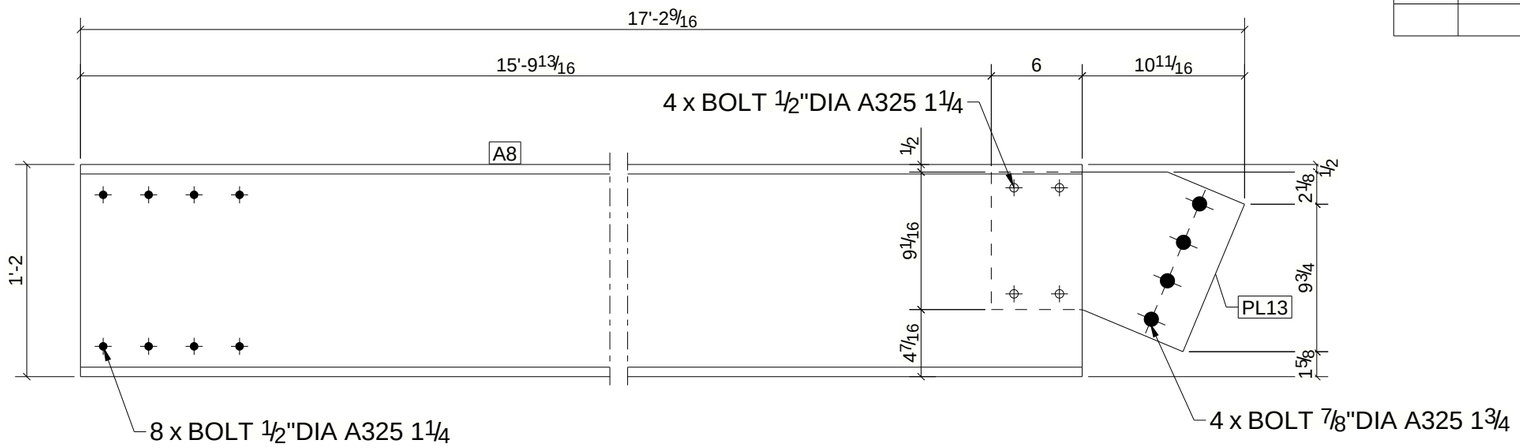


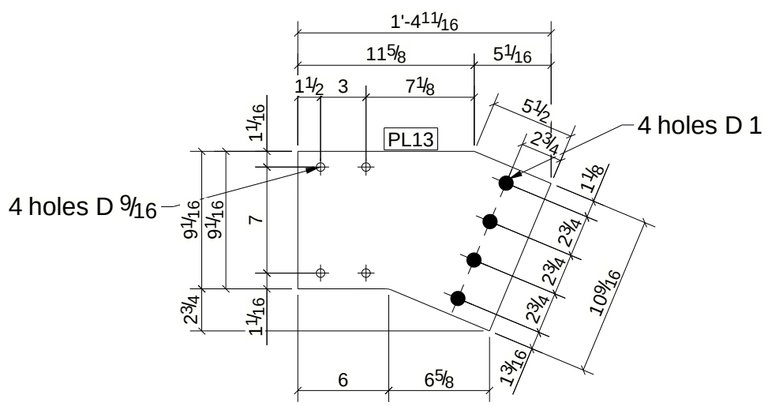


FRONT VIEW

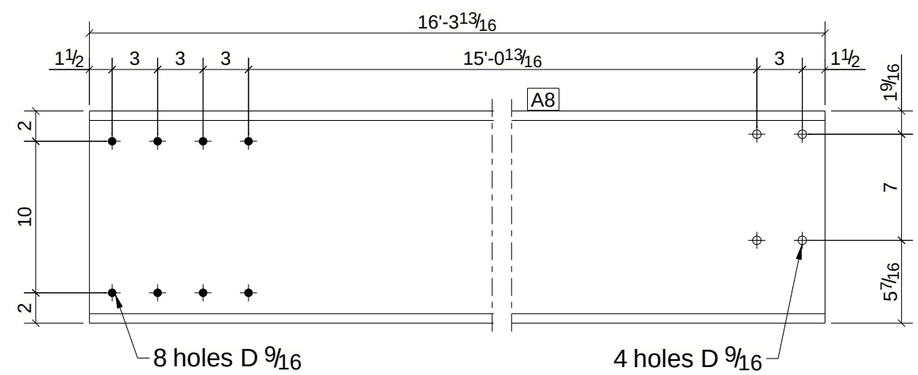


| REV | DESCRIPTION | DATE |
|---|---|---|
| | | |

| | | | |
|---|---|---|---|
| DESCRIPTION | | | |
| PROJECT NAME | | | |
| DRAWN BY | VN | JOB No. | DRG No. |
| DATE DRAWN | 07/19/2024 | | B26 |

Tekla structures

# BILL OF MATERIAL

| MARK | QTY | DESCRIPTION | LENGTH | WEIGHT | REMARKS |
|---|---|---|---|---|---|
| B29 | 2 | BEAMS | | | SQ-2 |
| A4 | 2 | 1400S250-97 | 16'-1 5/8" | 217.49 | A913-GR.50 |
| | | TOTAL WEIGHT THIS DRAWING | | 217 | |

FRONT VIEW

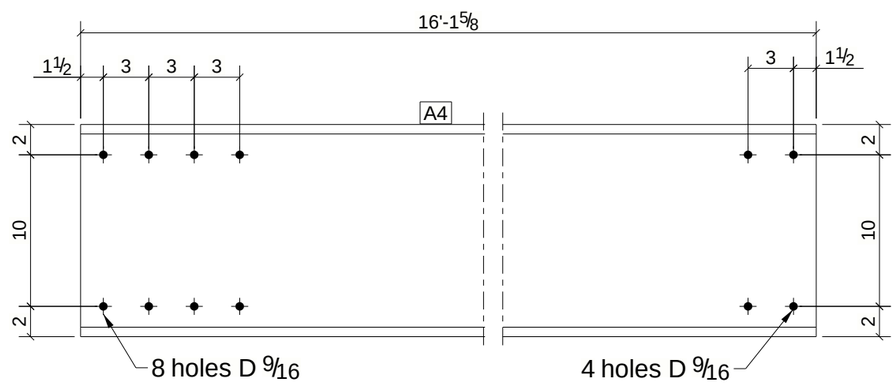


| REV | DESCRIPTION | DATE |
|---|---|---|
| | | |

| | | | |
|---|---|---|---|
| DESCRIPTION | | | |
| PROJECT NAME | | | |
| DRAWN BY | VN | JOB No. | DRG No. |
| DATE DRAWN | 07/11/2024 | | B29 |

Tekla structures

# BILL OF MATERIAL

| MARK | QTY | DESCRIPTION | LENGTH | WEIGHT | REMARKS |
|---|---|---|---|---|---|
| C1 | 1 | COLUMN | | | SQ-2 |
| H3 | 1 | HSS5X5X1/4 | 14'-7 3/8" | 213.86 | A500-GR.C |
| BP3 | 1 | PL0.2500X6.1521 | 0'-6 3/4" | 14.55 | A992 |
| PL17 | 1 | PL0.3125X12.9744 | 1'-1" | 12.18 | A36 |
| PL19 | 1 | FL0.5000X5.0000 | 0'-5" | 3.54 | A36 |
| | | TOTAL WEIGHT THIS DRAWING | | 244 | |

SIDE VIEW

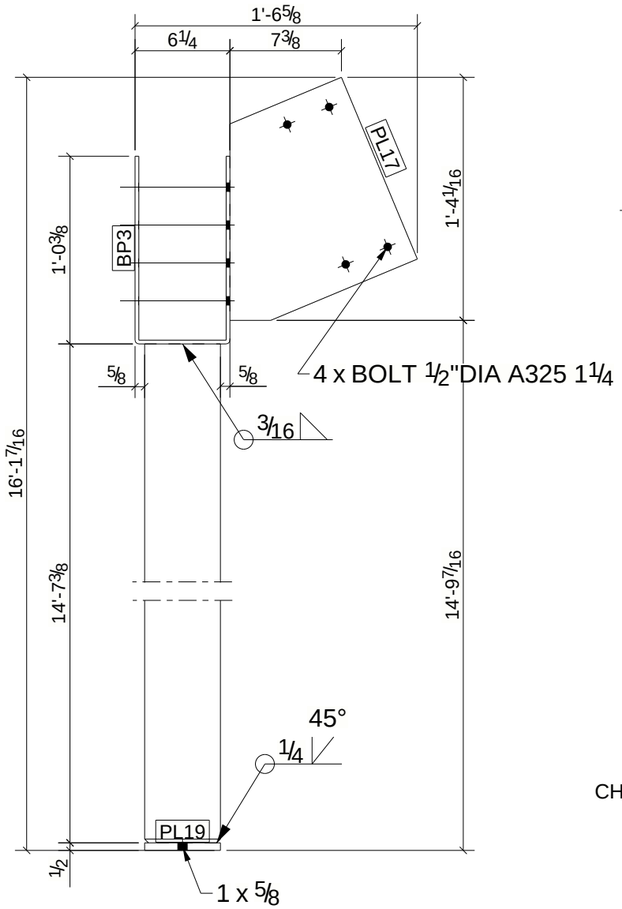


FRONT VIEW

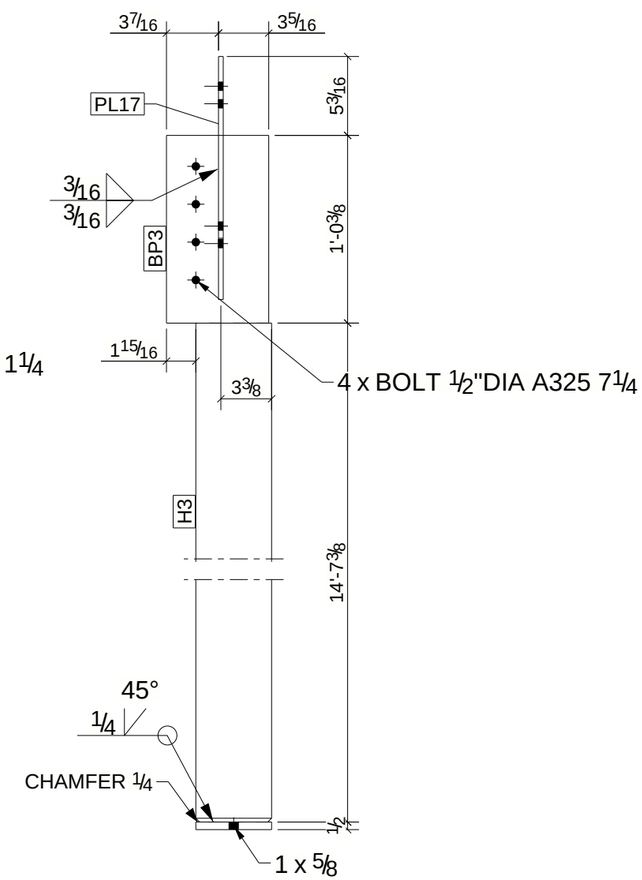


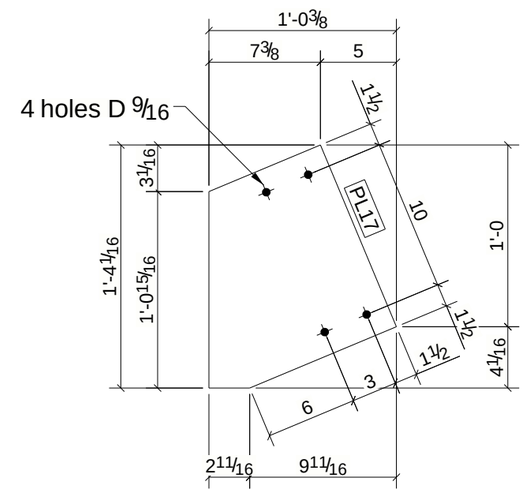


TOP VIEW

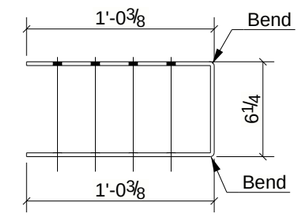


FRONT VIEW

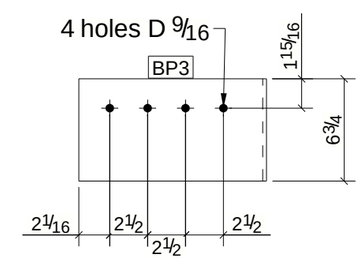


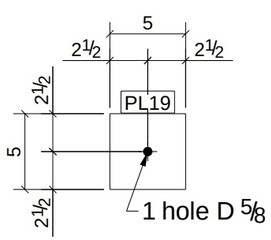


| REV | DESCRIPTION | DATE |
|---|---|---|
| | | |

| | | | |
|---|---|---|---|
| DESCRIPTION | | | |
| PROJECT NAME | | | |
| DRAWN BY | VN | JOB No. | DRG No. |
| DATE DRAWN | 07/18/2024 | | C1 |

Tekla structures

# BILL OF MATERIAL

| MARK | QTY | DESCRIPTION | LENGTH | WEIGHT | REMARKS |
|---|---|---|---|---|---|
| C2 | 1 | COLUMN | | | SQ-2 |
| H3 | 1 | HSS5X5X1/4 | 14'-7 3/8" | 213.86 | A500-GR.C |
| BP2 | 1 | PL0.2500X6.1521 | 0'-6 1/2" | 14.01 | A992 |
| PL17 | 1 | PL0.3125X12.9744 | 1'-1" | 12.18 | A36 |
| PL19 | 1 | FL0.5000X5.0000 | 0'-5" | 3.54 | A36 |
| | | TOTAL WEIGHT THIS DRAWING | | 244 | |

SIDE VIEW

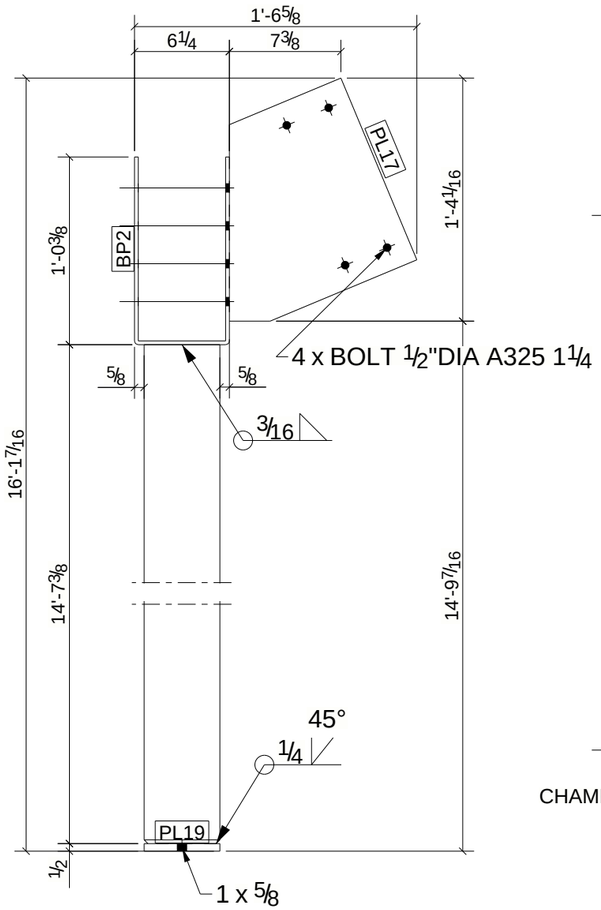


FRONT VIEW

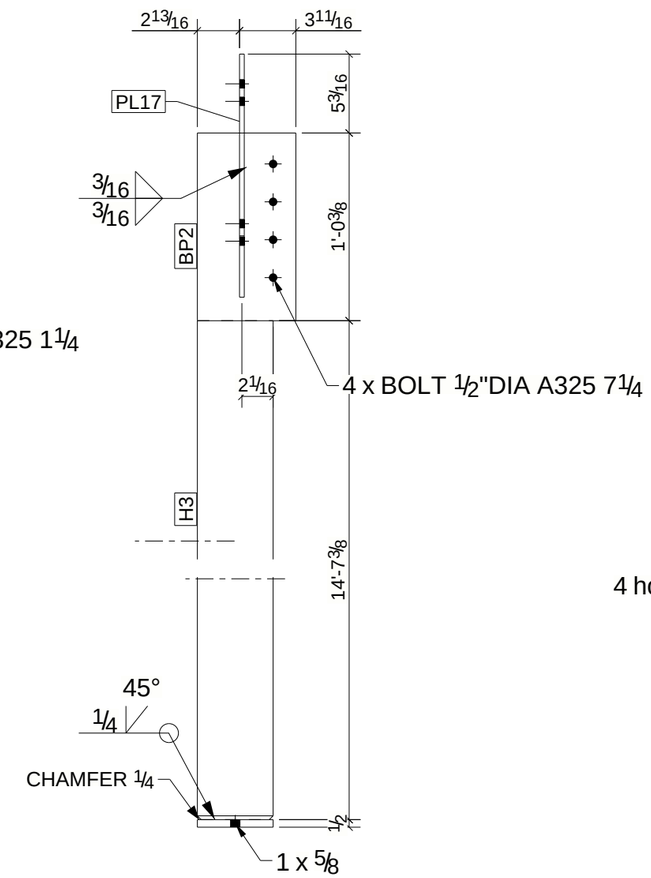


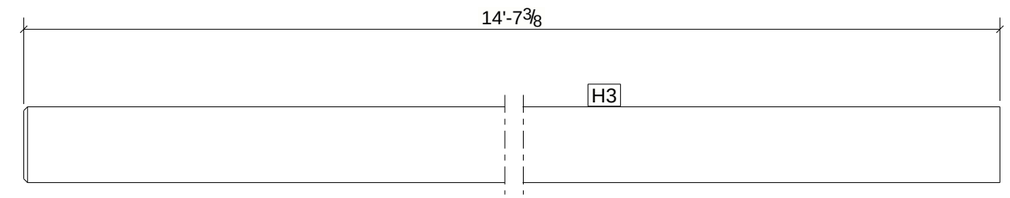


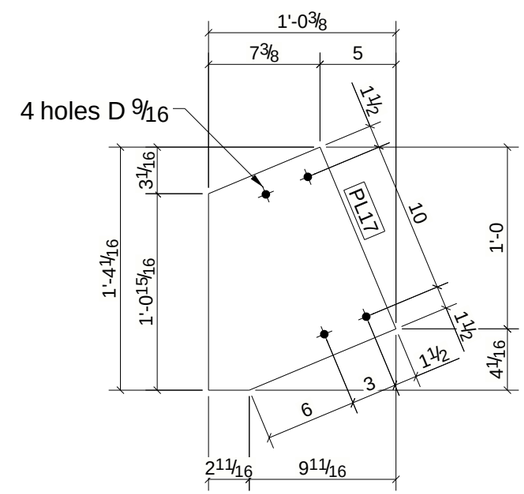


TOP VIEW

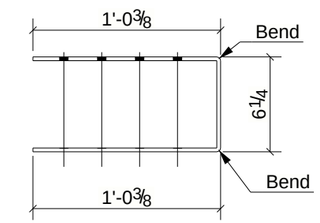


FRONT VEW

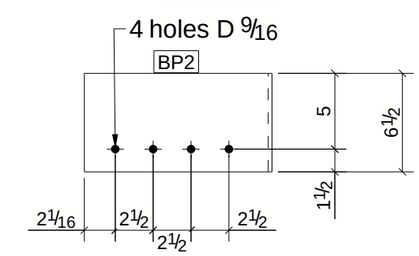


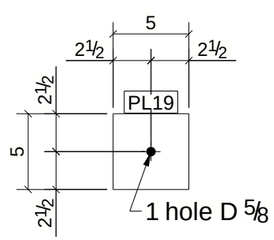


| REV | DESCRIPTION | DATE |
|---|---|---|
| | | |

| | | | |
|---|---|---|---|
| DESCRIPTION | | | |
| PROJECT NAME | | | |
| DRAWN BY | | JOB No. | DRG No. |
| DATE DRAWN | 07/11/2024 | | C2 |

Tekla structures

# BILL OF MATERIAL

| MARK | QTY | DESCRIPTION | LENGTH | WEIGHT | REMARKS |
|---|---|---|---|---|---|
| C3 | 1 | COLUMN | | | SQ-2 |
| H1 | 1 | HSS4X4X1/8 | 10'-0" | 60.24 | A500-GR.C |
| PL18 | 1 | FL0.2500X5.5000 | 0'-8 1/4" | 3.22 | A36 |
| PL43 | 1 | FL0.5000X4.0000 | 0'-4" | 2.27 | A36 |
| | | TOTAL WEIGHT THIS DRAWING | | 66 | |

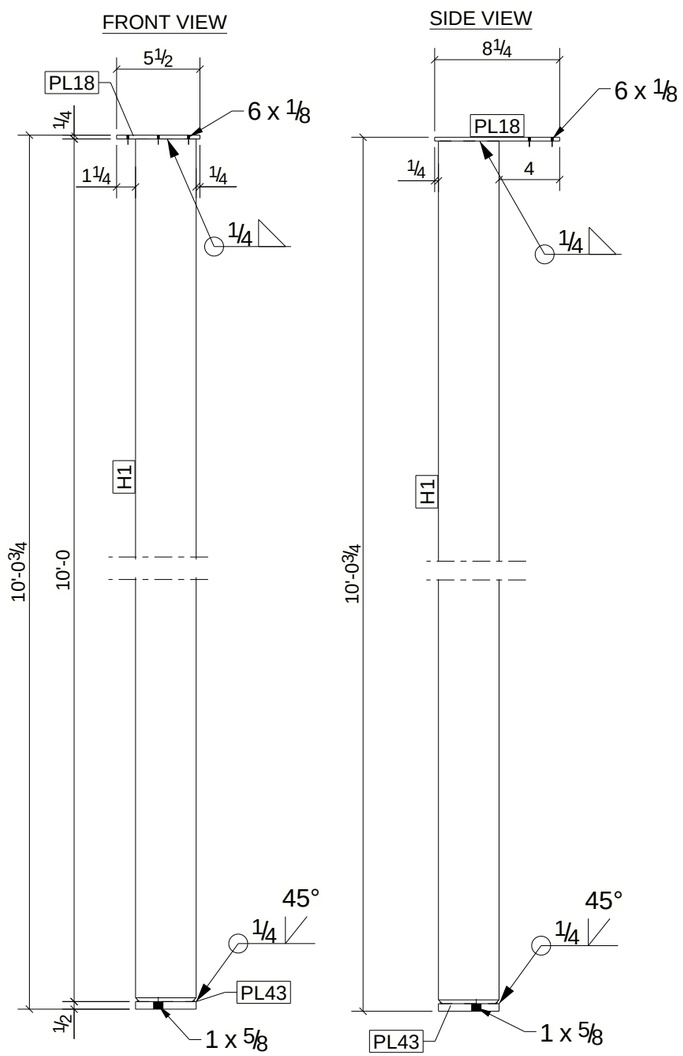


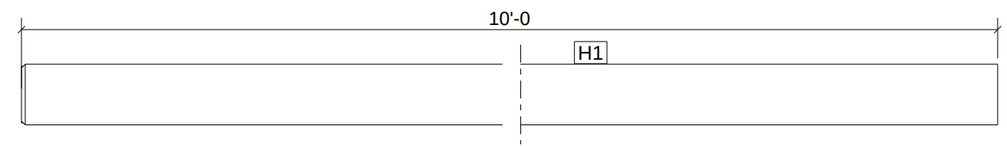


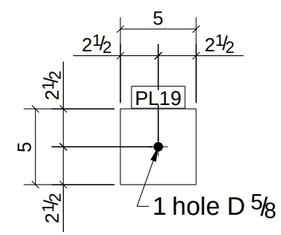


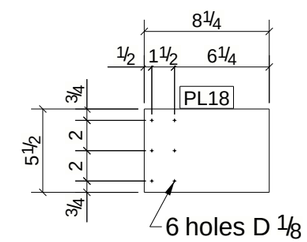


| REV | DESCRIPTION | DATE |
|---|---|---|
| | | |

| | | | |
|---|---|---|---|
| DESCRIPTION | | | |
| PROJECT NAME | | | |
| DRAWN BY | VN | JOB No. | DRG No. |
| DATE DRAWN | 07/18/2024 | | C3 |

Tekla structures

# BILL OF MATERIAL

| MARK | QTY | DESCRIPTION | LENGTH | WEIGHT | REMARKS |
|---|---|---|---|---|---|
| C4 | 6 | COLUMNS | | | SQ-2 |
| H2 | 6 | HSS6X6X1/4 | 2'-3 7/16" | 244.73 | A500-GR.C |
| BP1 | 6 | PL0.2500X6.1521 | 0'-8" | 103.48 | A992 |
| PL16 | 6 | PL0.3125X13.0009 | 1'-1 7/16" | 76.43 | A36 |
| | | TOTAL WEIGHT THIS DRAWING | | 425 | |

SIDE VIEW

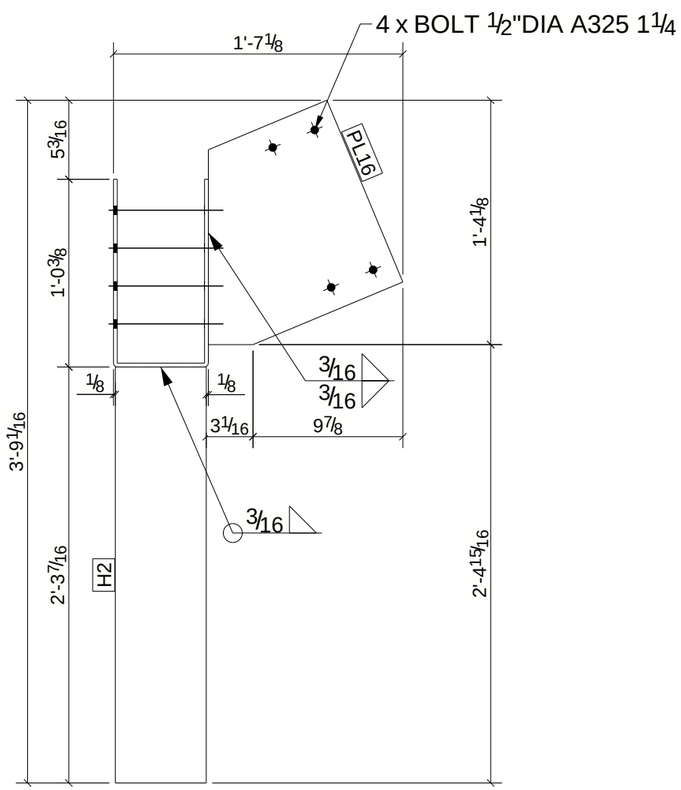


FRONT VIEW

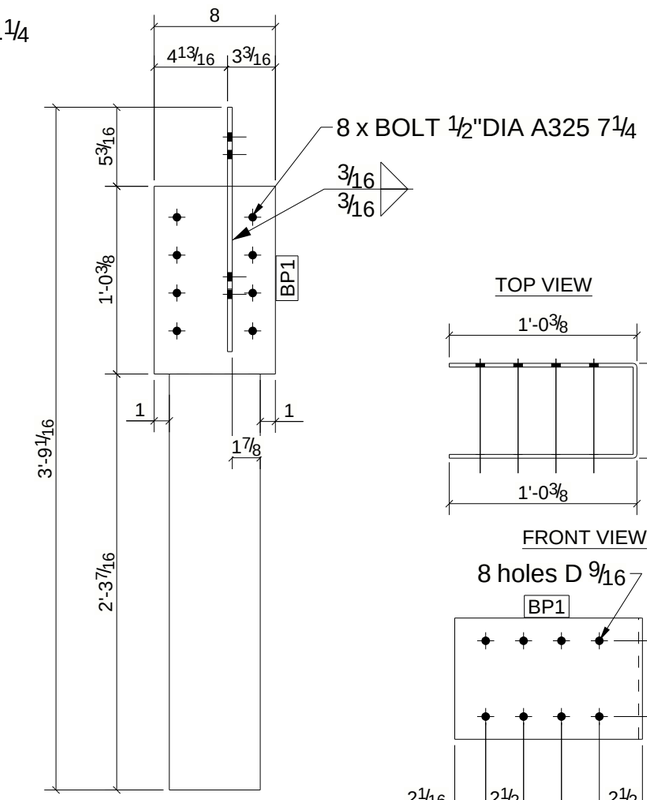


TOP VIEW

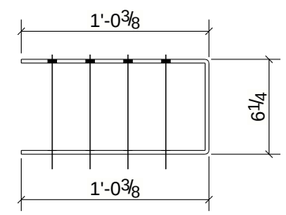


FRONT VIEW

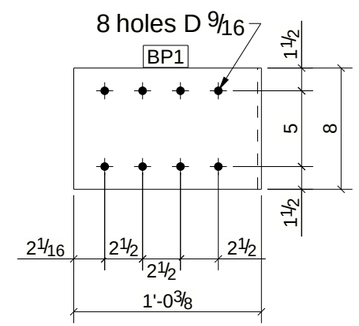


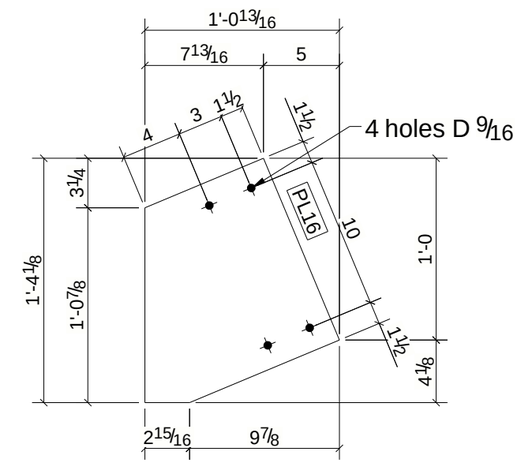


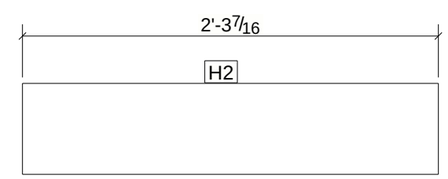


| REV | DESCRIPTION | DATE |
|---|---|---|
| | | |

| | | | |
|---|---|---|---|
| DESCRIPTION | | | |
| PROJECT NAME | | | |
| DRAWN BY | VN | JOB No. | DRG No. |
| DATE DRAWN | 07/11/2024 | | C4 |

Tekla structures

# BILL OF MATERIAL

| MARK | QTY | DESCRIPTION | LENGTH | WEIGHT | REMARKS |
|---|---|---|---|---|---|
| C5 | 1 | COLUMN | | | SQ-2 |
| H2 | 1 | HSS6X6X1/4 | 2'-3 7/16" | 40.79 | A500-GR.C |
| BP1 | 1 | PL0.2500X6.1521 | 0'-8" | 17.25 | A992 |
| PL16 | 1 | PL0.3125X13.0009 | 1'-1 7/16" | 12.74 | A36 |
| | | TOTAL WEIGHT THIS DRAWING | | 71 | |

SIDE VIEW

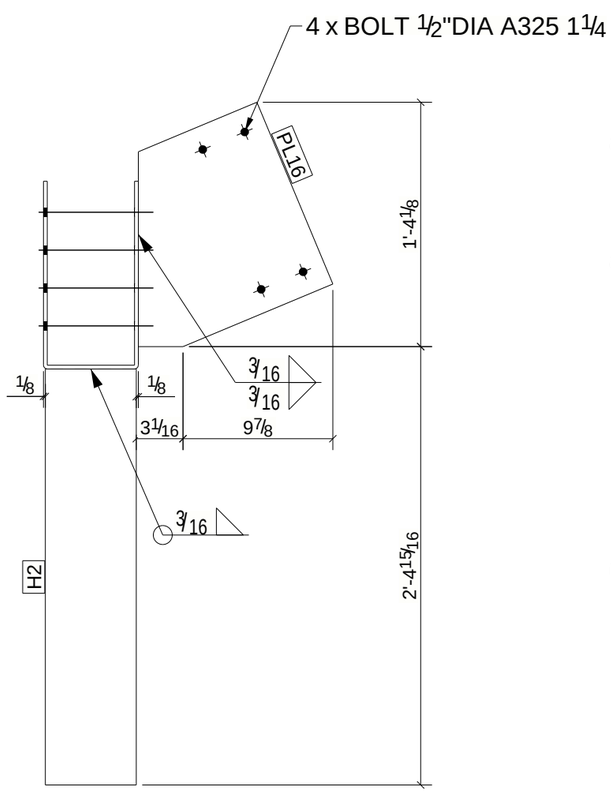


FRONT VIEW

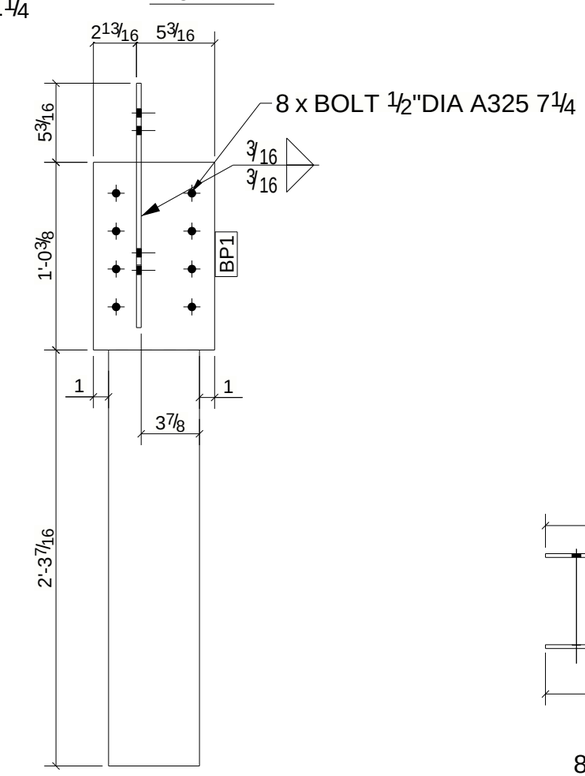


TOP VIEW

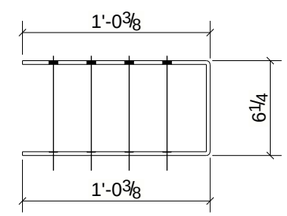


FRONT VIEW

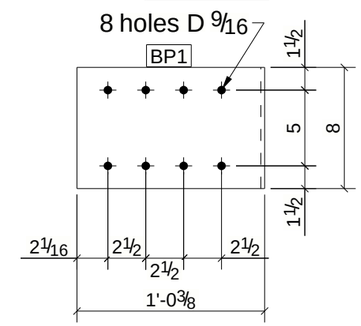


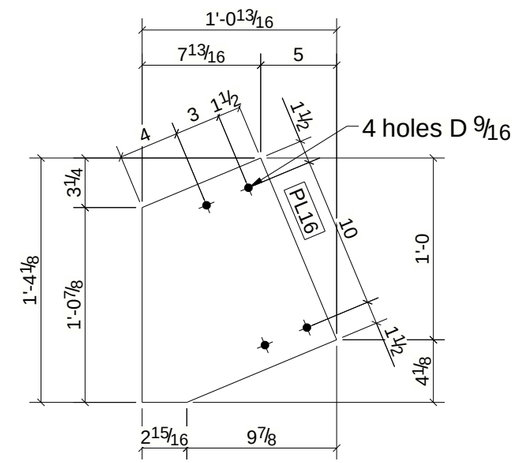


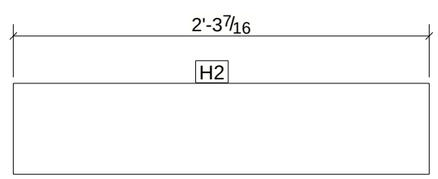


| REV | DESCRIPTION | DATE |
|---|---|---|
| | | |

| | | | |
|---|---|---|---|
| DESCRIPTION | | | |
| PROJECT NAME | | | |
| DRAWN BY | | JOB No. | DRG No. |
| DATE DRAWN | 07/15/2024 | | C5 |

Tekla structures

# BILL OF MATERIAL

| MARK | QTY | DESCRIPTION | LENGTH | WEIGHT | REMARKS |
|---|---|---|---|---|---|
| C6 | 1 | COLUMN | | | SQ-1/BEV-1 |
| H4 | 1 | HSS6X6X1/4 | 1'-6 3/4" | 27.84 | A500-GR.C |
| BP4 | 1 | PL0.2500X6.2500 | 0'-6 1/8" | 13.47 | A992 |
| PL44 | 2 | PL0.2500X3.0000 | 0'-7 13/16" | 3.34 | A36 |
| PL45 | 1 | PL0.2500X6.9614 | 0'-8 1/8" | 4.02 | A36 |
| | | TOTAL WEIGHT THIS DRAWING | | 49 | |

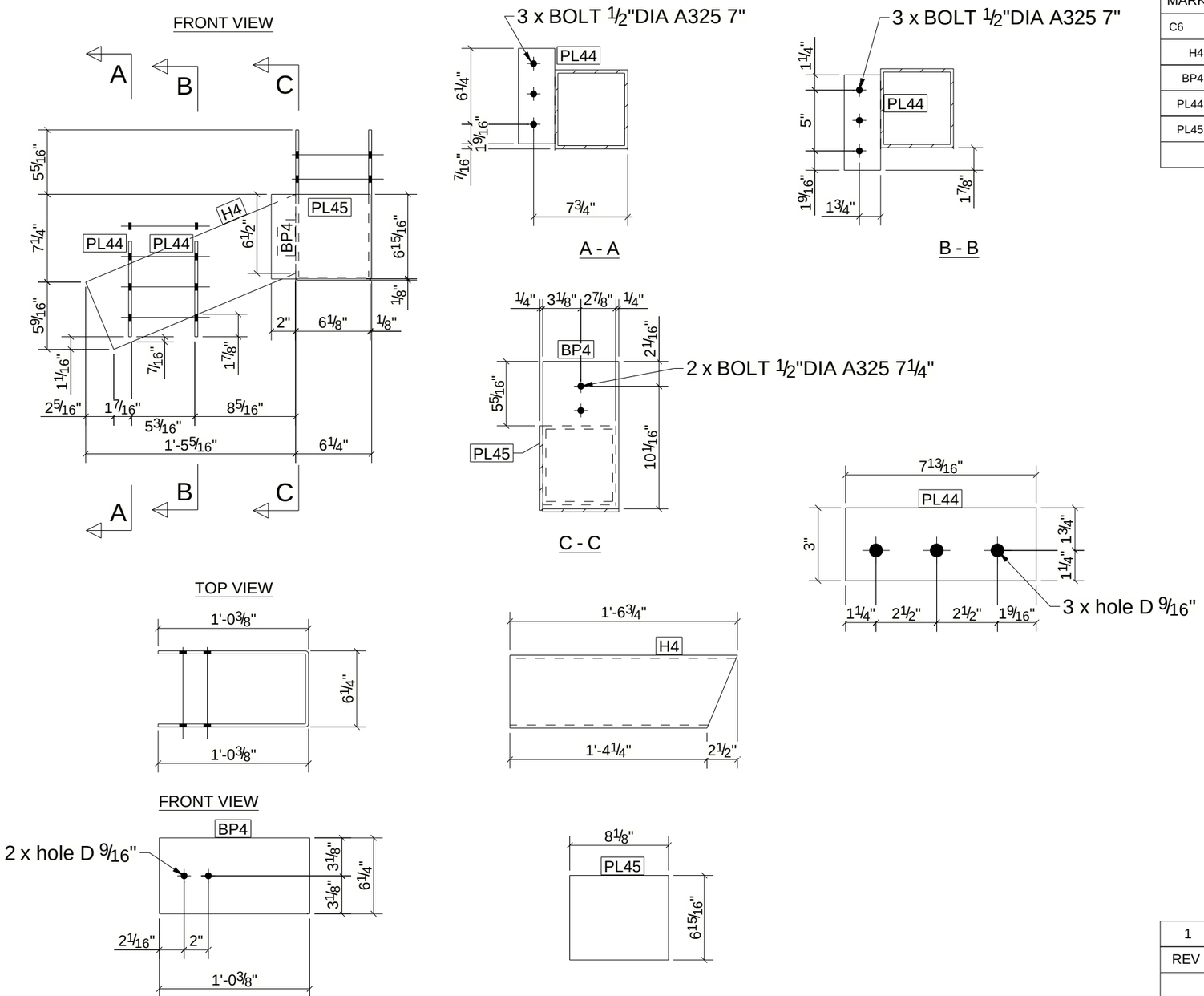


| REV | DESCRIPTION | DATE |
|---|---|---|
| 1 | ROOF FRAMING UPDATE | 11/18/2024 |

| | | | |
|---|---|---|---|
| DESCRIPTION | | | |
| PROJECT NAME | | | |
| DRAWN BY | | JOB No. | DRG No. |
| DATE DRAWN | 11/18/2024 | | C6 |

Tekla structures

# BILL OF MATERIAL

| MARK | QTY | DESCRIPTION | LENGTH | WEIGHT | REMARKS |
|---|---|---|---|---|---|
| C7 | 1 | COLUMN | | | SQ-1/BEV-1 |
| H4 | 1 | HSS6X6X1/4 | 1'-6 3/4" | 27.84 | A500-GR.C |
| BP4 | 1 | PL0.2500X6.2500 | 0'-6 1/8" | 13.47 | A992 |
| PL44 | 2 | PL0.2500X3.0000 | 0'-7 13/16" | 3.34 | A36 |
| PL45 | 1 | PL0.2500X6.9614 | 0'-8 1/8" | 4.02 | A36 |
| | | TOTAL WEIGHT THIS DRAWING | | 49 | |

FRONT VIEW

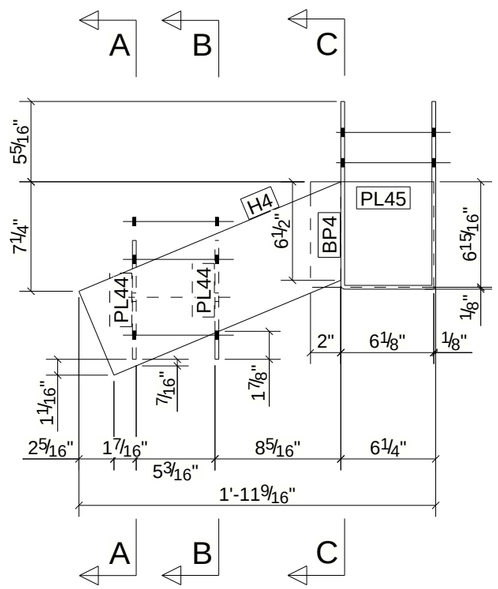


3 x BOLT 1/2"DIA A325 7"

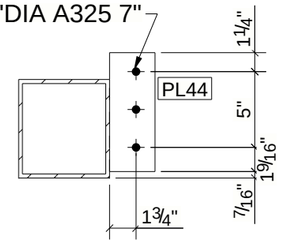


A - A

3 x BOLT 1/2"DIA A325 7"

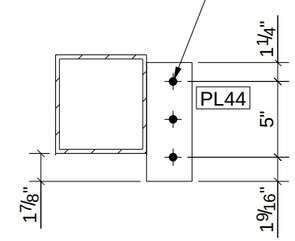


B - B

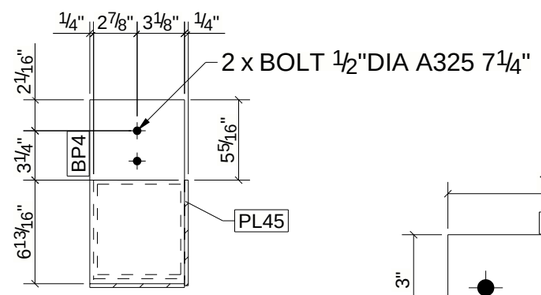


C - C

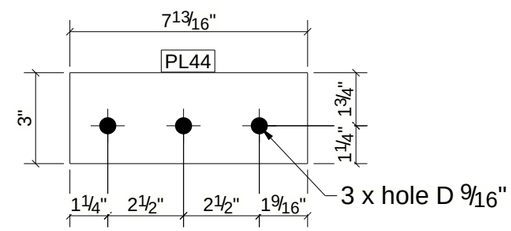


TOP VIEW

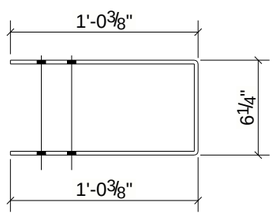


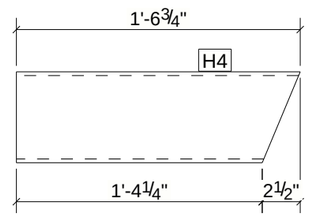


FRONT VIEW

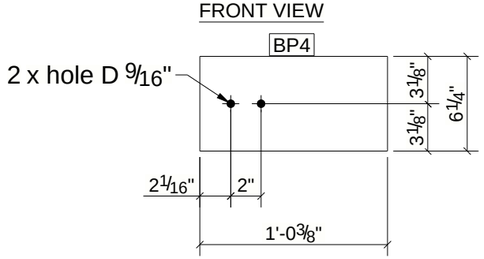


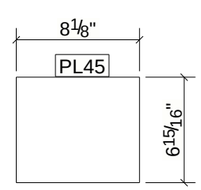


| REV | DESCRIPTION | DATE |
|---|---|---|
| 1 | ROOF FRAMING UPDATE | 11/18/2024 |

| | | | |
|---|---|---|---|
| DESCRIPTION | | | |
| PROJECT NAME | | | |
| DRAWN BY | | JOB No. | DRG No. |
| DATE DRAWN | 11/18/2024 | | C7 |

Tekla structures

# BILL OF MATERIAL

| MARK | QTY | DESCRIPTION | LENGTH | WEIGHT | REMARKS |
|---|---|---|---|---|---|
| TR1 | 7 | TRUSSES | | | SQ-2 |
| TC17 | 7 | 350S162-43 | 12'-4 3/4" | 98.64 | A913-GR.50 |
| BC18 | 7 | 350S162-43 | 11'-10 7/16" | 94.46 | A913-GR.50 |
| BC20 | 7 | 350S162-43 | 0'-6 1/16" | 4.04 | A913-GR.50 |
| BC87 | 7 | 350S162-43 | 11'-11 5/8" | 95.25 | A913-GR.50 |
| PL21 | 98 | PL0.0430X3.0000 | 0'-7" | 25.10 | A36 |
| PL22 | 14 | PL0.0430X3.0000 | 0'-3" | 1.46 | A36 |
| PL23 | 14 | PL0.0430X3.2508 | 0'-11 3/16" | 6.19 | A36 |
| PL24 | 14 | PL0.0430X3.4271 | 0'-8" | 3.54 | A36 |
| PL25 | 14 | PL0.0430X4.4167 | 0'-8" | 4.89 | A36 |
| PL26 | 14 | PL0.0430X3.0001 | 0'-7 7/16" | 3.61 | A36 |
| PL27 | 14 | PL0.0430X3.0000 | 0'-8" | 4.10 | A36 |
| TC18 | 7 | 350S162-43 | 12'-4 11/16" | 98.59 | A913-GR.50 |
| W71 | 91 | 350S162-43 | 1'-4 7/8" | 145.60 | A913-GR.50 |
| W73 | 7 | 350S162-43 | 1'-3 15/16" | 10.56 | A913-GR.50 |
| W74 | 7 | 350S162-43 | 1'-3 1/8" | 10.02 | A913-GR.50 |
| W75 | 7 | 350S162-43 | 1'-8 15/16" | 13.87 | A913-GR.50 |
| W601 | 63 | 350S162-43 | 1'-9 9/16" | 128.64 | A913-GR.50 |
| W603 | 7 | 350S162-43 | 1'-9 5/8" | 14.34 | A913-GR.50 |
| W607 | 7 | 350S162-43 | 1'-11 11/16" | 15.72 | A913-GR.50 |
| | | TOTAL WEIGHT THIS DRAWING | | 779 | |

NOTES
1. NUMBER IN CIRCLE INDICATES THE TOTAL AMOUNT OF SCREWS PER CONNECTION ON BOTH SIDES.
2. INSTALL 1 SCREW ON EACH SIDE OF TRUSS UNLESS NOTED OTHERWISE

FRONT VIEW

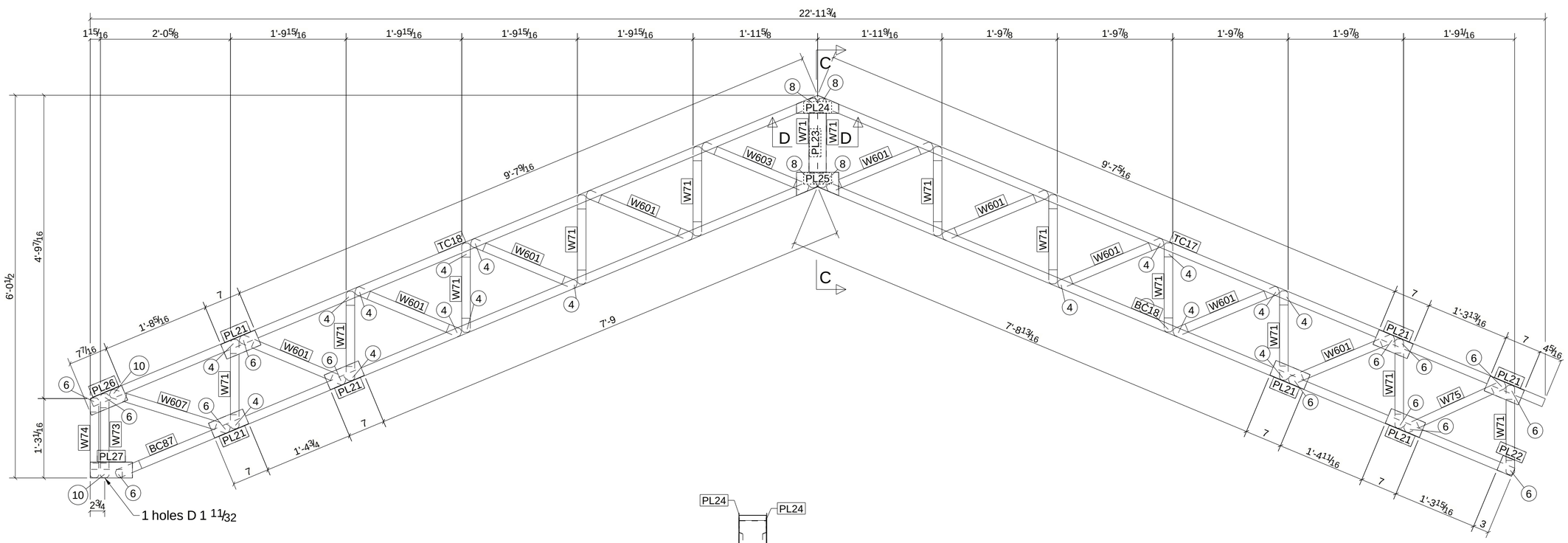


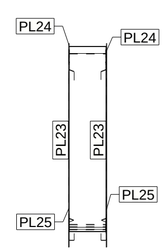


C - C

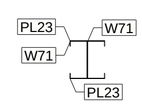


D - D

| REV | DESCRIPTION | DATE |
|---|---|---|
| | | |

| | | | |
|---|---|---|---|
| DESCRIPTION | | | |
| PROJECT NAME | | | |
| DRAWN BY | | JOB No. | DRG No. |
| DATE DRAWN | 07/19/2024 | | TR1 |

Tekla structures

# BILL OF MATERIAL

| MARK | QTY | DESCRIPTION | LENGTH | WEIGHT | REMARKS |
|---|---|---|---|---|---|
| TR2 | 2 | TRUSSES | | | SQ-2 |
| TC25 | 2 | 350S162-43 | 12'-4 3/4" | 28.18 | A913-GR.50 |
| BC25 | 2 | 350S162-43 | 11'-10 1/2" | 27.00 | A913-GR.50 |
| BC86 | 2 | 350S162-43 | 11'-10 7/16" | 26.99 | A913-GR.50 |
| PL21 | 56 | PL0.0430X3.0000 | 0'-7" | 14.34 | A36 |
| PL23 | 4 | PL0.0430X3.2508 | 0'-11 3/16" | 1.77 | A36 |
| PL24 | 4 | PL0.0430X3.4271 | 0'-8" | 1.01 | A36 |
| PL25 | 4 | PL0.0430X4.4167 | 0'-8" | 1.40 | A36 |
| TC24 | 2 | 350S162-43 | 12'-4 13/16" | 28.19 | A913-GR.50 |
| W71 | 26 | 350S162-43 | 1'-4 7/8" | 41.60 | A913-GR.50 |
| W75 | 2 | 350S162-43 | 1'-8 15/16" | 3.97 | A913-GR.50 |
| W601 | 12 | 350S162-43 | 1'-9 9/16" | 24.49 | A913-GR.50 |
| W602 | 2 | 350S162-43 | 1'-9 9/16" | 4.09 | A913-GR.50 |
| W603 | 2 | 350S162-43 | 1'-9 5/8" | 4.10 | A913-GR.50 |
| W605 | 2 | 350S162-43 | 1'-4 7/8" | 3.20 | A913-GR.50 |
| W606 | 2 | 350S162-43 | 1'-9" | 3.98 | A913-GR.50 |
| | | TOTAL WEIGHT THIS DRAWING | | 214 | |

NOTES
1. NUMBER IN CIRCLE INDICATES THE TOTAL AMOUNT OF SCREWS PER CONNECTION ON BOTH SIDES.
2. INSTALL 1 SCREW ON EACH SIDE OF TRUSS UNLESS NOTED OTHERWISE

FRONT VIEW

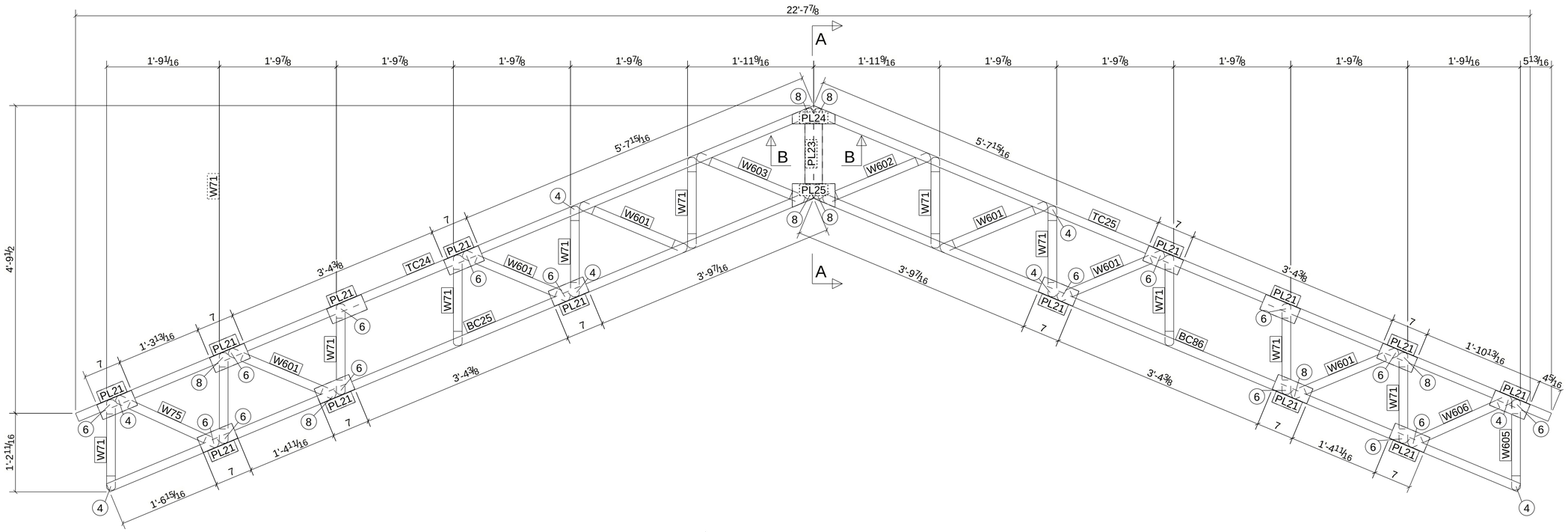


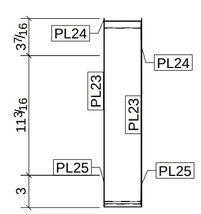


A - A

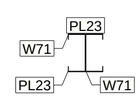


B - B

| REV | DESCRIPTION | DATE |
|---|---|---|
| | | |

| | | | |
|---|---|---|---|
| DESCRIPTION | | | |
| PROJECT NAME | | | |
| DRAWN BY | | JOB No. | DRG No. |
| DATE DRAWN | 07/16/2024 | | TR2 |

Tekla structures

# BILL OF MATERIAL

| MARK | QTY | DESCRIPTION | LENGTH | WEIGHT | REMARKS |
|---|---|---|---|---|---|
| TR3 | 4 | TRUSSES | | | SQ-2 |
| TC79 | 4 | 350S162-43 | 12'-4 5/8" | 56.32 | A913-GR.50 |
| BC23 | 4 | 350S162-43 | 0'-6" | 2.26 | A913-GR.50 |
| BC24 | 4 | 350S162-43 | 11'-10 7/16" | 53.98 | A913-GR.50 |
| BC85 | 4 | 350S162-43 | 11'-11 5/8" | 54.43 | A913-GR.50 |
| PL21 | 88 | PL0.0430X3.0000 | 0'-7" | 22.54 | A36 |
| PL23 | 8 | PL0.0430X3.2508 | 0'-11 3/16" | 3.54 | A36 |
| PL24 | 8 | PL0.0430X3.4271 | 0'-8" | 2.02 | A36 |
| PL25 | 8 | PL0.0430X4.4167 | 0'-8" | 2.80 | A36 |
| PL26 | 8 | PL0.0430X3.0001 | 0'-7 7/16" | 2.06 | A36 |
| PL27 | 8 | PL0.0430X3.0000 | 0'-8" | 2.34 | A36 |
| TC23 | 4 | 350S162-43 | 12'-4 11/16" | 56.34 | A913-GR.50 |
| W71 | 44 | 350S162-43 | 1'-4 7/8" | 70.40 | A913-GR.50 |
| W79 | 4 | 350S162-43 | 1'-3 15/16" | 6.03 | A913-GR.50 |
| W80 | 4 | 350S162-43 | 1'-3 1/8" | 5.72 | A913-GR.50 |
| W598 | 4 | 350S162-43 | 1'-4 15/16" | 6.41 | A913-GR.50 |
| W599 | 4 | 350S162-43 | 1'-4 15/16" | 6.42 | A913-GR.50 |
| W600 | 4 | 350S162-43 | 1'-9 11/16" | 8.21 | A913-GR.50 |
| W601 | 8 | 350S162-43 | 1'-9 9/16" | 16.33 | A913-GR.50 |
| W602 | 16 | 350S162-43 | 1'-9 9/16" | 32.71 | A913-GR.50 |
| W603 | 4 | 350S162-43 | 1'-9 5/8" | 8.20 | A913-GR.50 |
| W604 | 4 | 350S162-43 | 1'-11 3/4" | 9.00 | A913-GR.50 |
| W713 | 4 | 350S162-43 | 1'-8 15/16" | 7.93 | A913-GR.50 |
| | | TOTAL WEIGHT THIS DRAWING | | 436 | |

NOTES
1. NUMBER IN CIRCLE INDICATES THE TOTAL AMOUNT OF SCREWS PER CONNECTION ON BOTH SIDES.
2. INSTALL 1 SCREW ON EACH SIDE OF TRUSS UNLESS NOTED OTHERWISE

FRONT VIEW

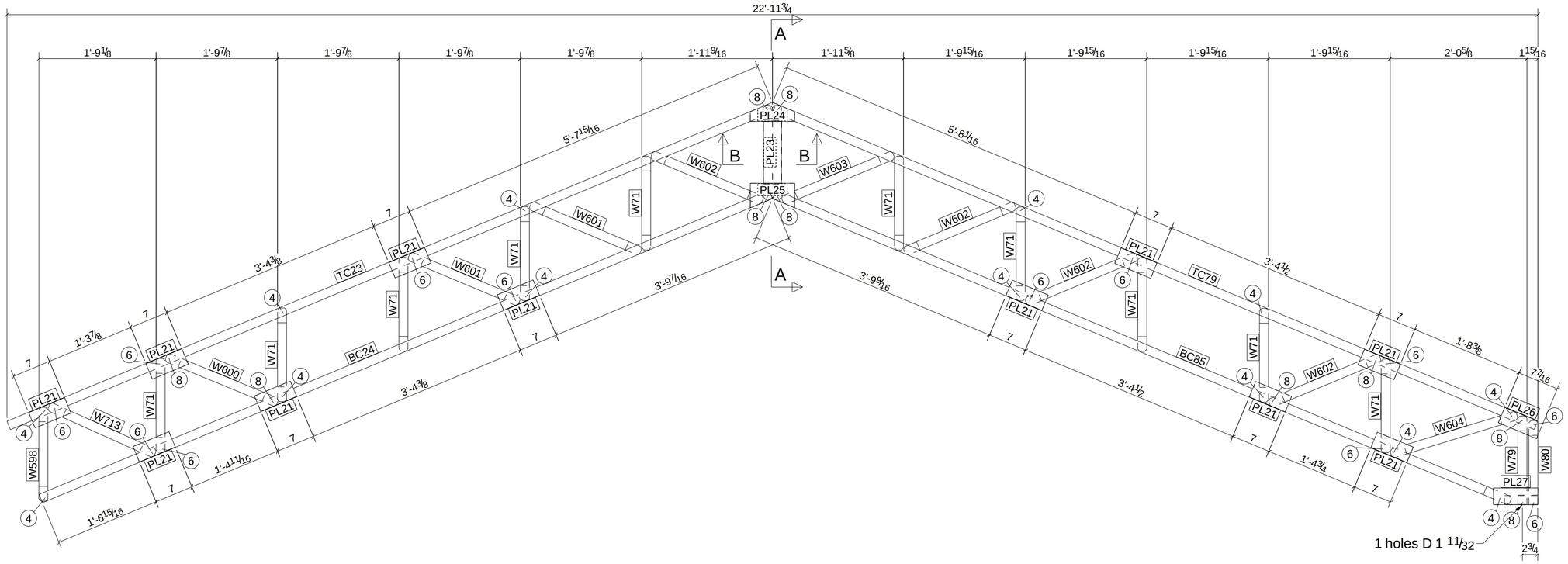


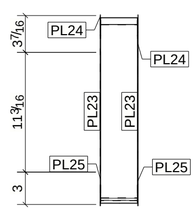


A - A

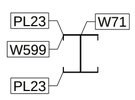


B - B

| REV | DESCRIPTION | DATE |
|---|---|---|
| | | |

| | | | |
|---|---|---|---|
| DESCRIPTION | | | |
| PROJECT NAME | | | |
| DRAWN BY | | JOB No. | DRG No. |
| DATE DRAWN | 07/19/2024 | | TR3 |

Tekla structures

# BILL OF MATERIAL

| MARK | QTY | DESCRIPTION | LENGTH | WEIGHT | REMARKS |
|---|---|---|---|---|---|
| TR4 | 1 | TRUSS | | | SQ-2 |
| TC77 | 1 | 350S162-43 | 12'-4 11/16" | 14.08 | A913-GR.50 |
| BC22 | 1 | 350S162-43 | 11'-11 5/8" | 13.61 | A913-GR.50 |
| BC23 | 2 | 350S162-43 | 0'-6" | 1.14 | A913-GR.50 |
| BC83 | 1 | 350S162-43 | 11'-11 5/8" | 13.61 | A913-GR.50 |
| PL21 | 20 | PL0.0430X3.0000 | 0'-7" | 5.12 | A36 |
| PL23 | 2 | PL0.0430X3.2509 | 0'-11 3/16" | 0.88 | A36 |
| PL24 | 2 | PL0.0430X3.4271 | 0'-8" | 0.51 | A36 |
| PL25 | 2 | PL0.0430X4.4167 | 0'-8" | 0.70 | A36 |
| PL26 | 4 | PL0.0430X3.0001 | 0'-7 7/16" | 1.03 | A36 |
| PL27 | 4 | PL0.0430X3.0000 | 0'-8" | 1.17 | A36 |
| TC22 | 1 | 350S162-43 | 12'-4 11/16" | 14.08 | A913-GR.50 |
| W71 | 1 | 350S162-43 | 1'-4 7/8" | 1.60 | A913-GR.50 |
| W73 | 1 | 350S162-43 | 1'-3 15/16" | 1.51 | A913-GR.50 |
| W74 | 1 | 350S162-43 | 1'-3 1/8" | 1.43 | A913-GR.50 |
| W76 | 4 | 350S162-43 | 1'-9 1/2" | 8.15 | A913-GR.50 |
| W79 | 1 | 350S162-43 | 1'-3 15/16" | 1.51 | A913-GR.50 |
| W80 | 1 | 350S162-43 | 1'-3 1/8" | 1.43 | A913-GR.50 |
| W82 | 2 | 350S162-43 | 1'-9 9/16" | 4.08 | A913-GR.50 |
| W331 | 1 | 350S162-43 | 1'-11 3/4" | 2.25 | A913-GR.50 |
| W336 | 1 | 350S162-43 | 1'-4 11/16" | 1.58 | A913-GR.50 |
| W666 | 2 | 350S162-43 | 1'-9 1/2" | 4.07 | A913-GR.50 |
| W700 | 1 | 350S162-43 | 1'-11 3/4" | 2.25 | A913-GR.50 |
| W704 | 10 | 350S162-43 | 1'-4 11/16" | 15.83 | A913-GR.50 |
| | | TOTAL WEIGHT THIS DRAWING | | 112 | |

FRONT VIEW

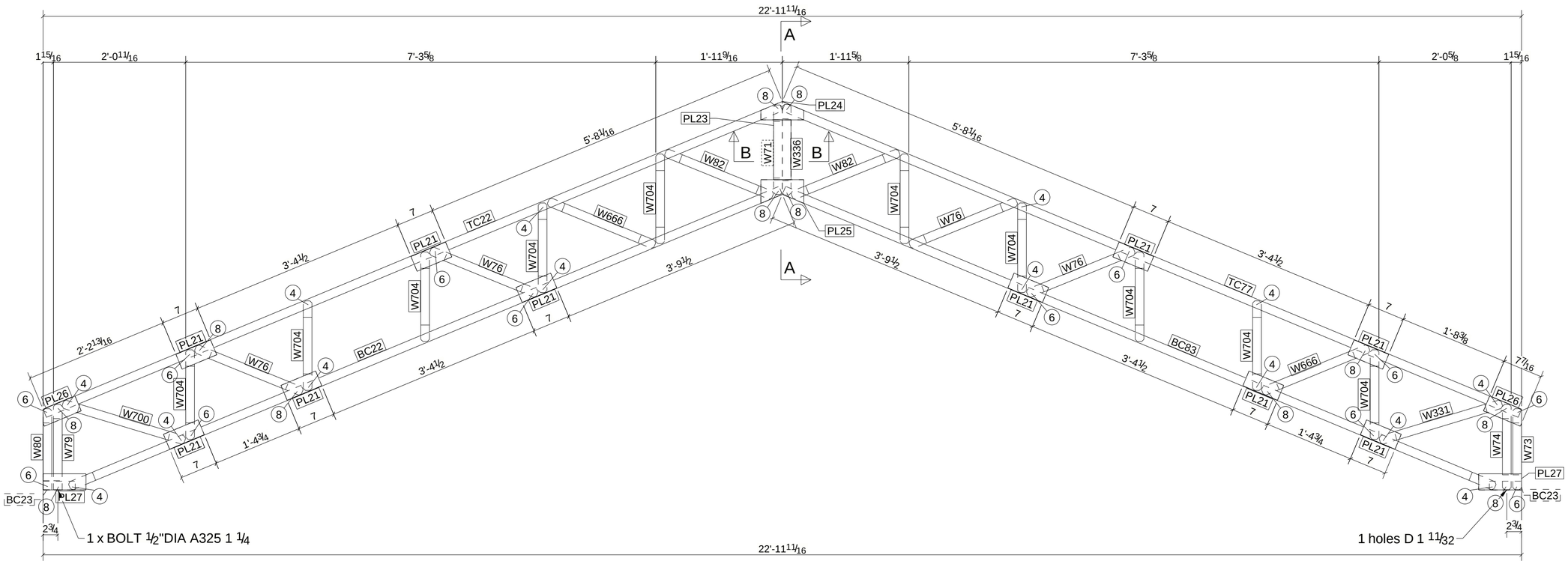


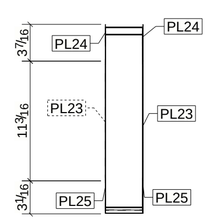


A - A

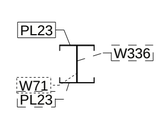


B - B

NOTES
1. NUMBER IN CIRCLE INDICATES THE TOTAL AMOUNT OF SCREWS PER CONNECTION ON BOTH SIDES.
2. INSTALL 1 SCREW ON EACH SIDE OF TRUSS UNLESS NOTED OTHERWISE

| REV | DESCRIPTION | DATE |
|---|---|---|
| | | |

| | | | |
|---|---|---|---|
| DESCRIPTION | | | |
| PROJECT NAME | | | |
| DRAWN BY | | JOB No. | DRG No. |
| DATE DRAWN | 07/19/2024 | | TR4 |

Tekla structures

# BILL OF MATERIAL

| MARK | QTY | DESCRIPTION | LENGTH | WEIGHT | REMARKS |
|---|---|---|---|---|---|
| TR5 | 2 | TRUSSES | | | SQ-2 |
| TC19 | 2 | 350S162-43 | 12'-4 11/16" | 28.17 | A913-GR.50 |
| BC19 | 4 | 350S162-43 | 11'-11 5/8" | 54.43 | A913-GR.50 |
| BC20 | 4 | 350S162-43 | 0'-6 1/16" | 2.31 | A913-GR.50 |
| PL21 | 48 | PL0.0430X3.0000 | 0'-7" | 12.29 | A36 |
| PL23 | 4 | PL0.0430X3.2508 | 0'-11 3/16" | 1.77 | A36 |
| PL24 | 4 | PL0.0430X3.4271 | 0'-8" | 1.01 | A36 |
| PL25 | 4 | PL0.0430X4.4167 | 0'-8" | 1.40 | A36 |
| PL26 | 8 | PL0.0430X3.0001 | 0'-7 7/16" | 2.06 | A36 |
| PL27 | 8 | PL0.0430X3.0000 | 0'-8" | 2.34 | A36 |
| TC80 | 2 | 350S162-43 | 12'-4 11/16" | 28.17 | A913-GR.50 |
| W73 | 2 | 350S162-43 | 1'-3 15/16" | 3.02 | A913-GR.50 |
| W74 | 2 | 350S162-43 | 1'-3 1/8" | 2.87 | A913-GR.50 |
| W76 | 8 | 350S162-43 | 1'-9 1/2" | 16.31 | A913-GR.50 |
| W78 | 2 | 350S162-43 | 1'-4 7/8" | 3.19 | A913-GR.50 |
| W79 | 2 | 350S162-43 | 1'-3 15/16" | 3.02 | A913-GR.50 |
| W80 | 2 | 350S162-43 | 1'-3 1/8" | 2.87 | A913-GR.50 |
| W331 | 4 | 350S162-43 | 1'-11 3/4" | 9.01 | A913-GR.50 |
| W377 | 2 | 350S162-43 | 1'-9 11/16" | 4.10 | A913-GR.50 |
| W666 | 4 | 350S162-43 | 1'-9 7/16" | 8.13 | A913-GR.50 |
| W698 | 6 | 350S162-43 | 1'-9 5/8" | 12.29 | A913-GR.50 |
| W704 | 12 | 350S162-43 | 1'-4 3/4" | 19.03 | A913-GR.50 |
| W707 | 10 | 350S162-43 | 1'-4 13/16" | 15.94 | A913-GR.50 |
| | | TOTAL WEIGHT THIS DRAWING | | 234 | |

FRONT VIEW

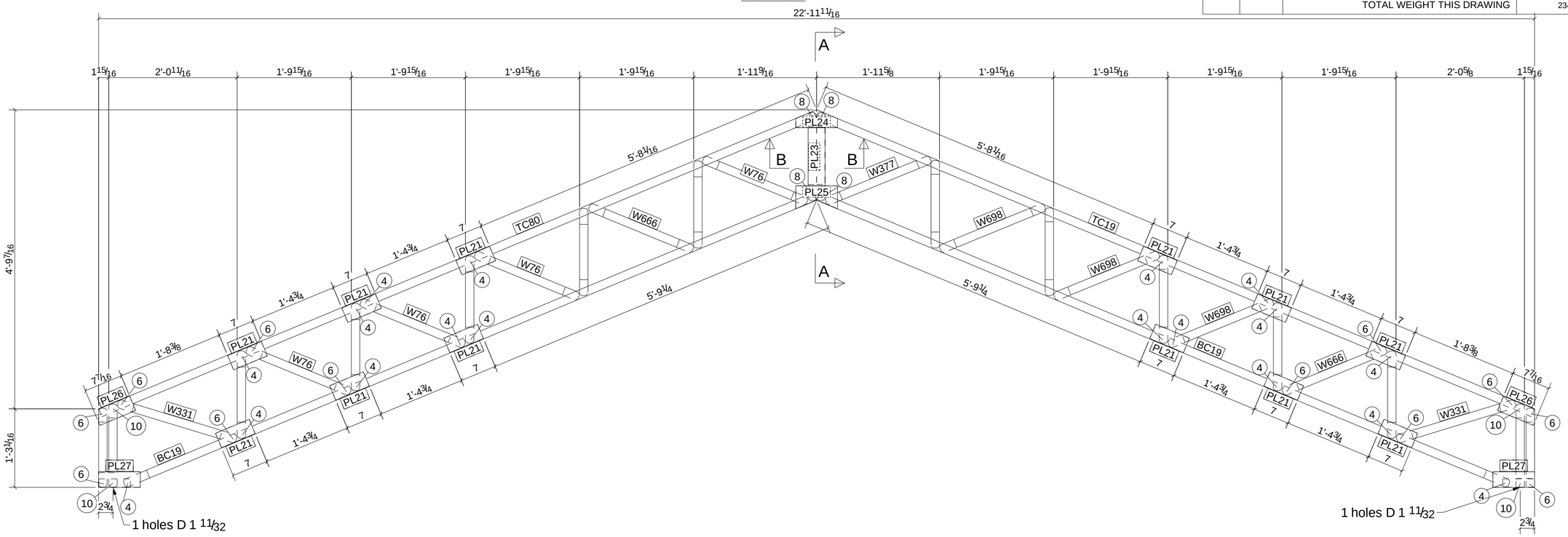


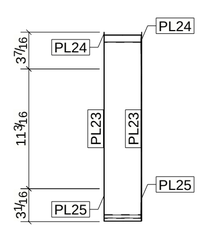


A - A

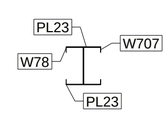


B - B

NOTES
1. NUMBER IN CIRCLE INDICATES THE TOTAL AMOUNT OF SCREWS PER CONNECTION ON BOTH SIDES.
2. INSTALL 1 SCREW ON EACH SIDE OF TRUSS UNLESS NOTED OTHERWISE

| REV | DESCRIPTION | DATE |
|---|---|---|
| | | |

| | | | |
|---|---|---|---|
| DESCRIPTION | | | |
| PROJECT NAME | | | |
| DRAWN BY | | JOB No. | DRG No. |
| DATE DRAWN | 07/19/2024 | | TR5 |

Tekla structures

# BILL OF MATERIAL

| MARK | QTY | DESCRIPTION | LENGTH | WEIGHT | REMARKS |
|---|---|---|---|---|---|
| TR6 | 7 | TRUSSES | | | SQ-2 |
| TC83 | 7 | 350S162-43 | 12'-4 11/16" | 98.59 | A913-GR.50 |
| BC20 | 7 | 350S162-43 | 0'-6 1/16" | 4.04 | A913-GR.50 |
| BC21 | 7 | 350S162-43 | 11'-10 1/2" | 94.51 | A913-GR.50 |
| BC68 | 7 | 350S162-43 | 11'-11 5/8" | 95.25 | A913-GR.50 |
| PL21 | 98 | PL0.0430X3.0000 | 0'-7" | 25.10 | A36 |
| PL22 | 14 | PL0.0430X3.0000 | 0'-3" | 1.46 | A36 |
| PL23 | 14 | PL0.0430X3.2508 | 0'-11 3/16" | 6.19 | A36 |
| PL24 | 14 | PL0.0430X3.4271 | 0'-8" | 3.54 | A36 |
| PL25 | 14 | PL0.0430X4.4167 | 0'-8" | 4.89 | A36 |
| PL26 | 14 | PL0.0430X3.0001 | 0'-7 7/16" | 3.61 | A36 |
| PL27 | 14 | PL0.0430X3.0000 | 0'-8" | 4.10 | A36 |
| TC20 | 7 | 350S162-43 | 12'-3 3/16" | 97.60 | A913-GR.50 |
| W76 | 14 | 350S162-43 | 1'-9 1/2" | 28.52 | A913-GR.50 |
| W79 | 7 | 350S162-43 | 1'-3 15/16" | 10.56 | A913-GR.50 |
| W80 | 7 | 350S162-43 | 1'-3 1/8" | 10.02 | A913-GR.50 |
| W377 | 7 | 350S162-43 | 1'-9 11/16" | 14.36 | A913-GR.50 |
| W586 | 49 | 350S162-43 | 1'-4 13/16" | 78.20 | A913-GR.50 |
| W663 | 7 | 350S162-43 | 1'-4 3/4" | 11.12 | A913-GR.50 |
| W664 | 28 | 350S162-43 | 1'-9 9/16" | 57.21 | A913-GR.50 |
| W665 | 7 | 350S162-43 | 1'-9" | 13.94 | A913-GR.50 |
| W667 | 7 | 350S162-43 | 1'-11 5/8" | 15.66 | A913-GR.50 |
| W698 | 21 | 350S162-43 | 1'-9 5/8" | 42.98 | A913-GR.50 |
| W701 | 7 | 350S162-43 | 1'-4 3/4" | 11.09 | A913-GR.50 |
| W704 | 14 | 350S162-43 | 1'-4 3/4" | 22.19 | A913-GR.50 |
| W707 | 14 | 350S162-43 | 1'-4 13/16" | 22.31 | A913-GR.50 |
| | | TOTAL WEIGHT THIS DRAWING | | 777 | |

FRONT VIEW

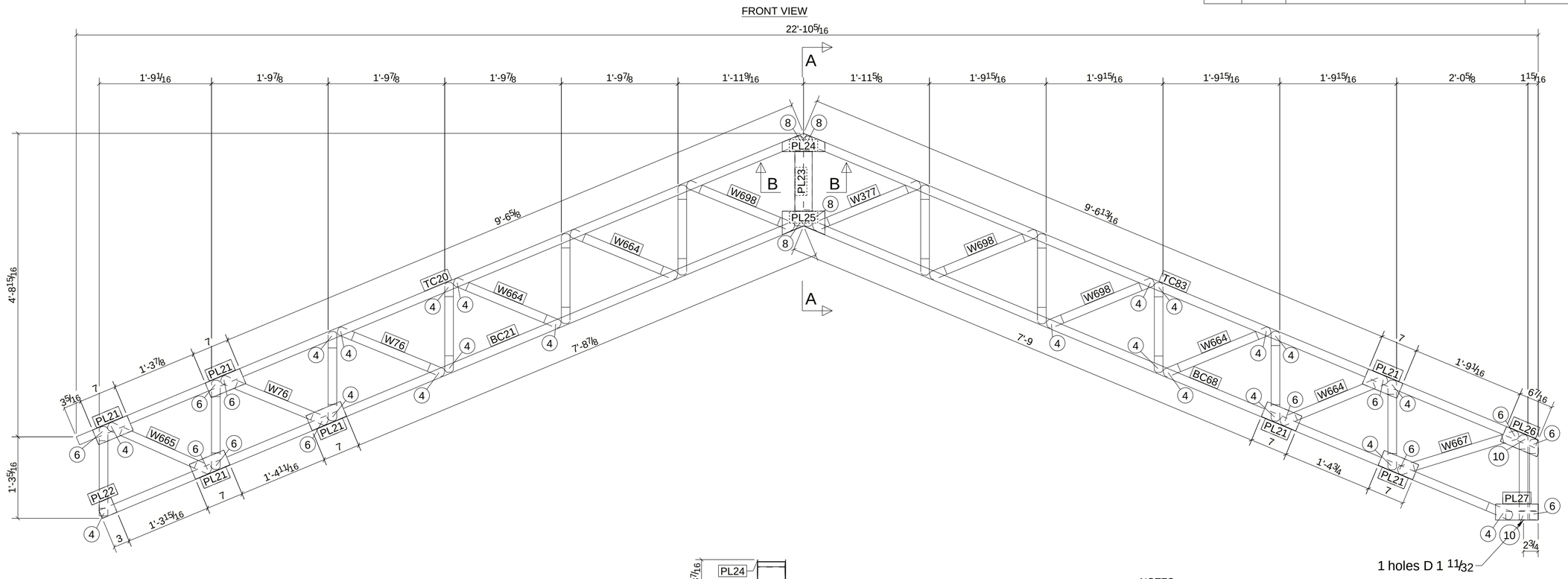


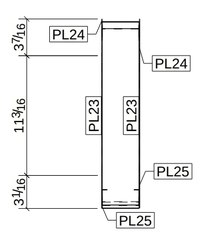


A - A

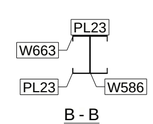


B - B

NOTES
1. NUMBER IN CIRCLE INDICATES THE TOTAL AMOUNT OF SCREWS PER CONNECTION ON BOTH SIDES.
2. INSTALL 1 SCREW ON EACH SIDE OF TRUSS UNLESS NOTED OTHERWISE

| REV | DESCRIPTION | DATE |
|---|---|---|
| | | |

| | | | |
|---|---|---|---|
| DESCRIPTION | | | |
| PROJECT NAME | | | |
| DRAWN BY | | JOB No. | DRG No. |
| DATE DRAWN | 07/19/2024 | | TR6 |

Tekla structures

# BILL OF MATERIAL

| MARK | QTY | DESCRIPTION | LENGTH | WEIGHT | REMARKS |
|---|---|---|---|---|---|
| TR7 | 1 | TRUSS | | | SQ-2 |
| TC59 | 1 | 550S162-43 | 12'-4 11/16" | 17.88 | A913-GR.50 |
| BC77 | 1 | 550S162-43 | 11'-11 5/8" | 17.27 | A913-GR.50 |
| BC79 | 1 | 550S162-43 | 11'-10 11*** | 17.16 | A913-GR.50 |
| P336 | 1 | 550S162-43 | 0'-6 1/16" | 0.73 | A913-GR.50 |
| R2 | 2 | 550S162-43 | 11'-11 15*** | 34.61 | A913-GR.50 |
| R3 | 2 | 550S162-43 | 11'-8 15/16" | 33.89 | A913-GR.50 |
| TC68 | 1 | 550S162-43 | 12'-2 13/16" | 17.65 | A913-GR.50 |
| W94 | 3 | 550S162-43 | 1'-4 7/8" | 6.09 | A913-GR.50 |
| W150 | 7 | 550S162-43 | 1'-4 11/16" | 14.07 | A913-GR.50 |
| W165 | 1 | 550S162-43 | 1'-4 13/16" | 2.02 | A913-GR.50 |
| W200 | 5 | 550S162-43 | 1'-4 11/16" | 10.05 | A913-GR.50 |
| W204 | 1 | 550S162-43 | 1'-3 15/16" | 1.91 | A913-GR.50 |
| W217 | 1 | 550S162-43 | 1'-3 1/8" | 1.82 | A913-GR.50 |
| W251 | 3 | 550S162-43 | 1'-5" | 6.14 | A913-GR.50 |
| W252 | 1 | 550S162-43 | 1'-4 15/16" | 2.04 | A913-GR.50 |
| W256 | 4 | 550S162-43 | 1'-6 5/16" | 8.82 | A913-GR.50 |
| W527 | 2 | 550S162-43 | 1'-9 9/16" | 5.19 | A913-GR.50 |
| W668 | 3 | 550S162-43 | 1'-9 7/16" | 7.73 | A913-GR.50 |
| W669 | 1 | 550S162-43 | 1'-11 13/16" | 2.86 | A913-GR.50 |
| p27 | 2 | PL0.0430X3.2508 | 0'-11 3/16" | 0.88 | A36 |
| p28 | 6 | PL0.0430X3.0000 | 0'-7" | 1.54 | A36 |
| p30 | 2 | PL0.0430X3.0002 | 0'-7 7/16" | 0.52 | A36 |
| p32 | 2 | PL0.0430X3.0000 | 0'-8" | 0.59 | A36 |
| p33 | 2 | PL0.0430X3.4271 | 0'-8" | 0.51 | A36 |
| p34 | 2 | PL0.0430X4.4167 | 0'-8" | 0.70 | A36 |
| | | TOTAL WEIGHT THIS DRAWING | | 213 | |

FRONT VIEW

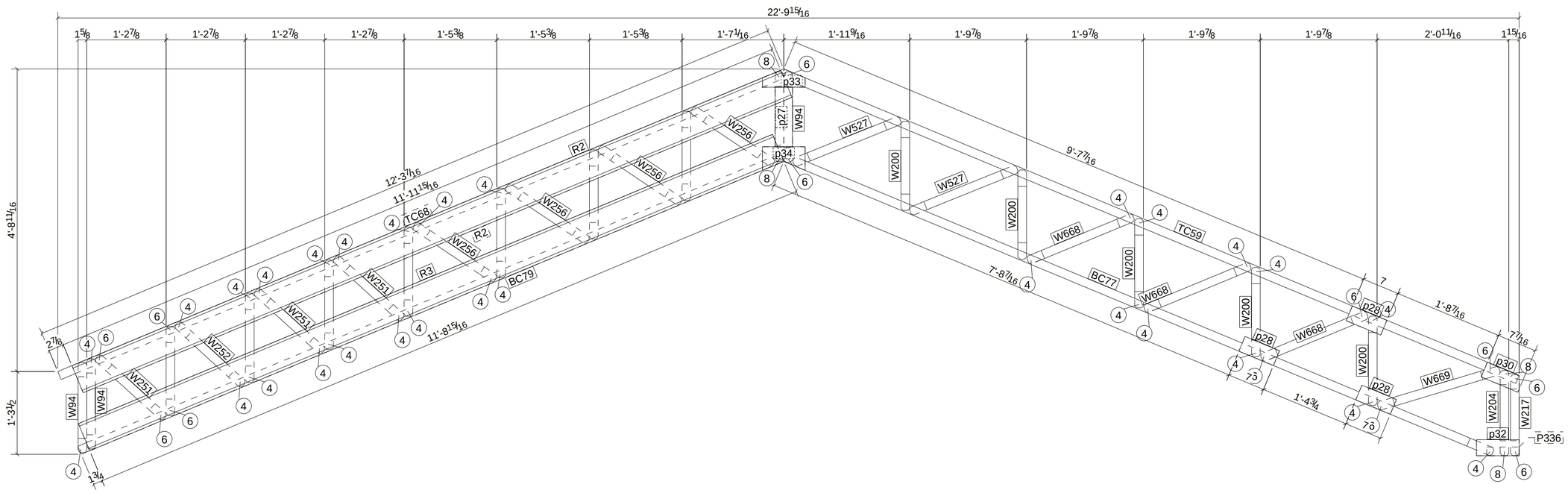


NOTES
1. NUMBER IN CIRCLE INDICATES THE TOTAL AMOUNT OF SCREWS PER CONNECTION ON BOTH SIDES.
2. INSTALL 1 SCREW ON EACH SIDE OF TRUSS UNLESS NOTED OTHERWISE

| REV | DESCRIPTION | DATE |
|---|---|---|
| | | |

| | | | |
|---|---|---|---|
| DESCRIPTION | | | |
| PROJECT NAME | | | |
| DRAWN BY | | JOB No. | DRG No. |
| DATE DRAWN | 07/18/2024 | | TR7 |

Tekla structures

# BILL OF MATERIAL

| MARK | QTY | DESCRIPTION | LENGTH | WEIGHT | REMARKS |
|---|---|---|---|---|---|
| TR8 | 2 | TRUSSES | | | SQ-2 |
| TC69 | 2 | 350S162-43 | 12'-4 1/4" | 28.08 | A913-GR.50 |
| BC91 | 2 | 350S162-43 | 11'-10 1/2" | 26.99 | A913-GR.50 |
| BC92 | 2 | 350S162-43 | 11'-11 5/8" | 27.21 | A913-GR.50 |
| BC96 | 2 | 350S162-43 | 0'-6 1/16" | 1.15 | A913-GR.50 |
| TC71 | 2 | 350S162-43 | 12'-3 3/8" | 27.91 | A913-GR.50 |
| W701 | 2 | 350S162-43 | 1'-4 3/4" | 3.17 | A913-GR.50 |
| W702 | 2 | 350S162-43 | 1'-3 5/16" | 2.90 | A913-GR.50 |
| W703 | 2 | 350S162-43 | 1'-4" | 3.03 | A913-GR.50 |
| W704 | 12 | 350S162-43 | 1'-4 11/16" | 19.00 | A913-GR.50 |
| W705 | 2 | 350S162-43 | 1'-4 7/8" | 3.20 | A913-GR.50 |
| W706 | 2 | 350S162-43 | 1'-4 7/8" | 3.20 | A913-GR.50 |
| W707 | 2 | 350S162-43 | 1'-4 13/16" | 3.18 | A913-GR.50 |
| W708 | 10 | 350S162-43 | 1'-4 13/16" | 15.92 | A913-GR.50 |
| W709 | 2 | 350S162-43 | 1'-8 5/8" | 3.91 | A913-GR.50 |
| W710 | 4 | 350S162-43 | 1'-6 15/16" | 7.17 | A913-GR.50 |
| W711 | 6 | 350S162-43 | 1'-7" | 10.79 | A913-GR.50 |
| W712 | 2 | 350S162-43 | 1'-9 1/16" | 4.00 | A913-GR.50 |
| W713 | 2 | 350S162-43 | 1'-8 15/16" | 3.97 | A913-GR.50 |
| W714 | 2 | 350S162-43 | 1'-7" | 3.60 | A913-GR.50 |
| W715 | 6 | 350S162-43 | 1'-7 1/16" | 10.84 | A913-GR.50 |
| W716 | 2 | 350S162-43 | 1'-7" | 3.60 | A913-GR.50 |
| W717 | 2 | 350S162-43 | 1'-6 7/16" | 3.49 | A913-GR.50 |
| p27 | 4 | PL0.0430X3.2508 | 0'-11 3/16" | 1.77 | A36 |
| p28 | 24 | PL0.0430X3.0000 | 0'-7" | 6.15 | A36 |
| p31 | 4 | PL0.0430X3.0000 | 0'-7" | 0.97 | A36 |
| p32 | 4 | PL0.0430X3.0000 | 0'-8" | 1.17 | A36 |
| p33 | 4 | PL0.0430X3.4271 | 0'-8" | 1.01 | A36 |
| p34 | 4 | PL0.0430X4.4167 | 0'-8" | 1.40 | A36 |
| | | TOTAL WEIGHT THIS DRAWING | | 229 | |

FRONT VIEW

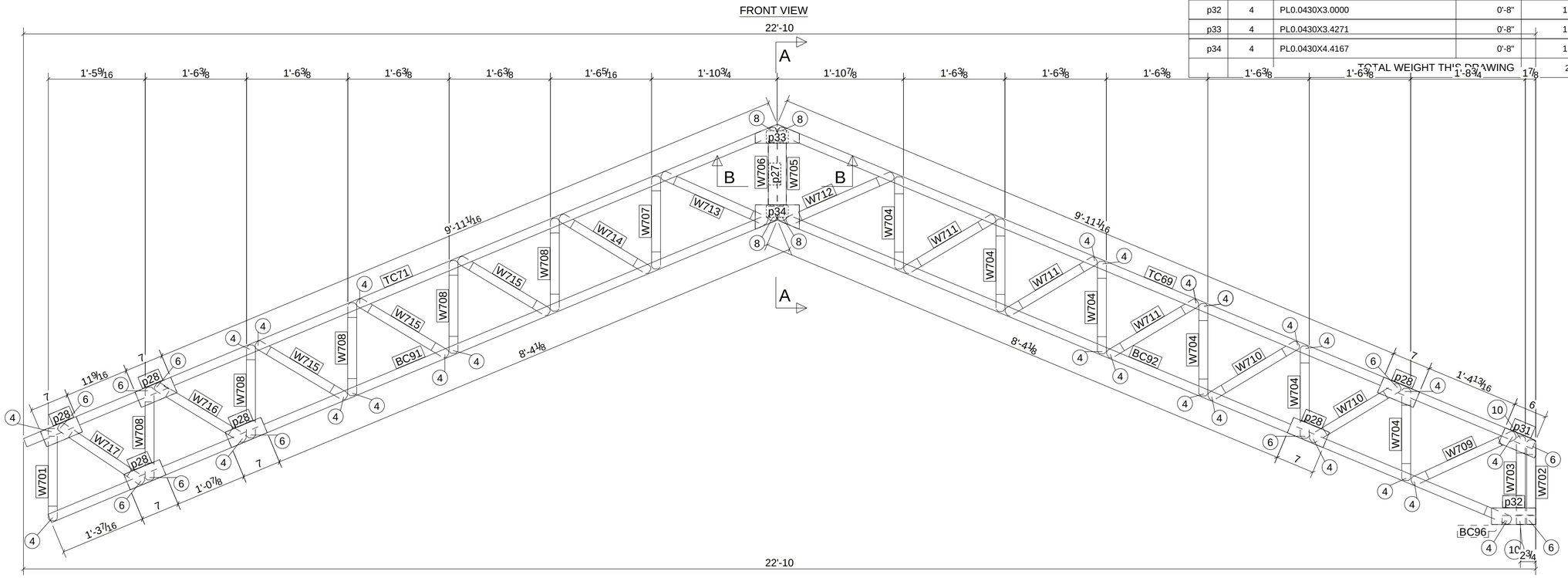


NOTES
1. NUMBER IN CIRCLE INDICATES THE TOTAL AMOUNT OF SCREWS PER CONNECTION ON BOTH SIDES.
2. INSTALL 1 SCREW ON EACH SIDE OF TRUSS UNLESS NOTED OTHERWISE

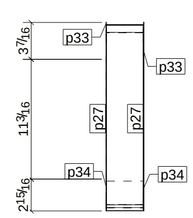


A - A

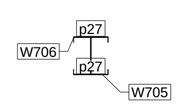


B - B

| REV | DESCRIPTION | DATE |
|---|---|---|
| | | |

| | | | |
|---|---|---|---|
| DESCRIPTION | | | |
| PROJECT NAME | | | |
| DRAWN BY | | JOB No. | DRG No. |
| DATE DRAWN | 07/19/2024 | | TR8 |

Tekla structures

# BILL OF MATERIAL

| MARK | QTY | DESCRIPTION | LENGTH | WEIGHT | REMARKS |
|---|---|---|---|---|---|
| TR9 | 1 | TRUSS | | | SQ-2 |
| B?1 | 1 | 350S162-43 | 24'-2 13/16" | 27.55 | A913-GR.50 |
| PL29 | 20 | PL0.0430X3.0000 | 0'-6" | 4.39 | A36 |
| T?1 | 1 | 350S162-43 | 24'-2 7/8" | 27.55 | A913-GR.50 |
| W107 | 1 | 350S162-43 | 1'-4" | 1.51 | A913-GR.50 |
| W109 | 1 | 350S162-43 | 1'-4 7/8" | 1.60 | A913-GR.50 |
| W110 | 1 | 350S162-43 | 1'-5 1/4" | 1.64 | A913-GR.50 |
| W111 | 1 | 350S162-43 | 1'-5 11/16" | 1.68 | A913-GR.50 |
| W112 | 1 | 350S162-43 | 1'-6 1/8" | 1.71 | A913-GR.50 |
| W113 | 1 | 350S162-43 | 1'-6 1/2" | 1.75 | A913-GR.50 |
| W114 | 1 | 350S162-43 | 1'-6 15/16" | 1.79 | A913-GR.50 |
| W115 | 1 | 350S162-43 | 1'-7 5/16" | 1.83 | A913-GR.50 |
| W116 | 1 | 350S162-43 | 1'-7 3/4" | 1.87 | A913-GR.50 |
| W117 | 1 | 350S162-43 | 1'-8 1/8" | 1.91 | A913-GR.50 |
| W118 | 1 | 350S162-43 | 1'-8 9/16" | 1.95 | A913-GR.50 |
| W119 | 1 | 350S162-43 | 1'-9 5/8" | 2.05 | A913-GR.50 |
| W120 | 1 | 350S162-43 | 1'-9" | 1.99 | A913-GR.50 |
| W121 | 1 | 350S162-43 | 1'-9 3/8" | 2.03 | A913-GR.50 |
| W122 | 1 | 350S162-43 | 2'-1 1/8" | 2.38 | A913-GR.50 |
| W123 | 1 | 350S162-43 | 2'-1 15/16" | 2.46 | A913-GR.50 |
| W124 | 1 | 350S162-43 | 2'-0 11/16" | 2.34 | A913-GR.50 |
| W125 | 1 | 350S162-43 | 2'-0 15/16" | 2.36 | A913-GR.50 |
| W126 | 1 | 350S162-43 | 2'-1 1/4" | 2.39 | A913-GR.50 |
| W127 | 1 | 350S162-43 | 2'-1 1/2" | 2.42 | A913-GR.50 |
| W128 | 1 | 350S162-43 | 2'-1 3/4" | 2.44 | A913-GR.50 |
| W129 | 1 | 350S162-43 | 2'-2 1/4" | 2.49 | A913-GR.50 |
| W130 | 1 | 350S162-43 | 2'-2 9/16" | 2.52 | A913-GR.50 |
| W131 | 1 | 350S162-43 | 2'-2 7/8" | 2.55 | A913-GR.50 |
| W132 | 1 | 350S162-43 | 2'-3 3/16" | 2.57 | A913-GR.50 |
| W133 | 1 | 350S162-43 | 2'-0 5/16" | 2.30 | A913-GR.50 |
| W134 | 1 | 350S162-43 | 1'-6 5/16" | 1.73 | A913-GR.50 |
| W265 | 1 | 350S162-43 | 1'-4 7/16" | 1.56 | A913-GR.50 |
| W393 | 1 | 350S162-43 | 4'-8 3/8" | 5.34 | A913-GR.50 |
| W394 | 1 | 350S162-43 | 0'-7 5/16" | 0.69 | A913-GR.50 |
| W395 | 1 | 350S162-43 | 0'-7 3/8" | 0.70 | A913-GR.50 |
| W396 | 1 | 350S162-43 | 0'-7 1/16" | 0.67 | A913-GR.50 |
| W397 | 1 | 350S162-43 | 0'-7 7/16" | 0.71 | A913-GR.50 |
| W398 | 1 | 350S162-43 | 0'-7 11/16" | 0.73 | A913-GR.50 |
| W399 | 1 | 350S162-43 | 0'-7 5/8" | 0.72 | A913-GR.50 |
| W400 | 1 | 350S162-43 | 0'-7 1/2" | 0.71 | A913-GR.50 |
| W401 | 1 | 350S162-43 | 0'-8 1/2" | 0.81 | A913-GR.50 |
| W402 | 1 | 350S162-43 | 0'-8 3/8" | 0.79 | A913-GR.50 |
| W608 | 1 | 350S162-43 | 0'-7 1/4" | 0.69 | A913-GR.50 |
| | | TOTAL WEIGHT THIS DRAWING | | 130 | |

FRONT VIEW

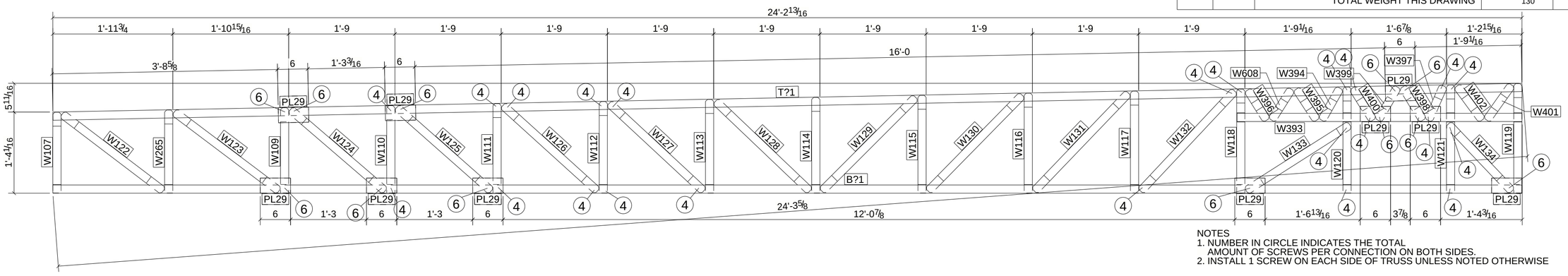


NOTES
1. NUMBER IN CIRCLE INDICATES THE TOTAL AMOUNT OF SCREWS PER CONNECTION ON BOTH SIDES.
2. INSTALL 1 SCREW ON EACH SIDE OF TRUSS UNLESS NOTED OTHERWISE

| REV | DESCRIPTION | DATE |
|---|---|---|
| | | |

| | | | |
|---|---|---|---|
| DESCRIPTION | | | |
| PROJECT NAME | | | |
| DRAWN BY | | JOB No. | DRG No. |
| DATE DRAWN | 07/19/2024 | | TR9 |

Tekla structures

# BILL OF MATERIAL

| MARK | QTY | DESCRIPTION | LENGTH | WEIGHT | REMARKS |
|---|---|---|---|---|---|
| TR10 | 18 | TRUSSES | | | SQ-2 |
| B?2 | 18 | 350S162-43 | 3'-7 1/16" | 73.42 | A913-GR.50 |
| T?2 | 18 | 350S162-43 | 3'-7 3/16" | 73.65 | A913-GR.50 |
| W107 | 18 | 350S162-43 | 1'-4" | 27.25 | A913-GR.50 |
| W135 | 18 | 350S162-43 | 1'-4 13/16" | 28.68 | A913-GR.50 |
| W136 | 18 | 350S162-43 | 1'-11 7/8" | 40.72 | A913-GR.50 |
| W137 | 18 | 350S162-43 | 2'-0 3/8" | 41.54 | A913-GR.50 |
| W265 | 18 | 350S162-43 | 1'-4 3/8" | 27.97 | A913-GR.50 |
| | | TOTAL WEIGHT THIS DRAWING | | 313 | |

FRONT VIEW

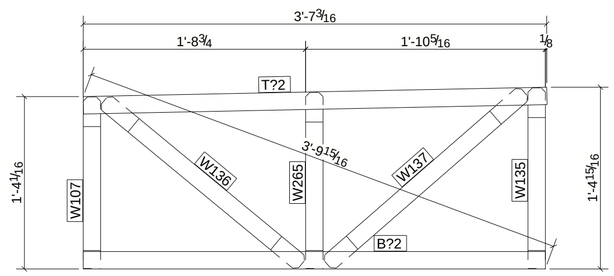


NOTES
1. NUMBER IN CIRCLE INDICATES THE TOTAL AMOUNT OF SCREWS PER CONNECTION ON BOTH SIDES.
2. INSTALL 1 SCREW ON EACH SIDE OF TRUSS UNLESS NOTED OTHERWISE

| REV | DESCRIPTION | DATE |
|---|---|---|
| | | |

| | | | |
|---|---|---|---|
| DESCRIPTION | | | |
| PROJECT NAME | | | |
| DRAWN BY | | JOB No. | DRG No. |
| DATE DRAWN | 07/16/2024 | | TR10 |

Tekla structures

# BILL OF MATERIAL

| MARK | QTY | DESCRIPTION | LENGTH | WEIGHT | REMARKS |
|---|---|---|---|---|---|
| TR11 | 6 | TRUSSES | | | SQ-2 |
| B?3 | 6 | 350S162-43 | 19'-7 5/8" | 133.91 | A913-GR.50 |
| B?4 | 6 | 350S162-43 | 0'-8 1/8" | 4.62 | A913-GR.50 |
| PL29 | 72 | PL0.0430X3.0000 | 0'-6" | 15.81 | A36 |
| PL41 | 12 | PL0.0430X3.0000 | 1'-0" | 5.27 | A36 |
| PL42 | 12 | PL0.0430X3.0000 | 0'-4 1/2" | 1.98 | A36 |
| T?3 | 6 | 350S162-43 | 20'-2 3/16" | 137.63 | A913-GR.50 |
| W118 | 6 | 350S162-43 | 1'-8 9/16" | 11.70 | A913-GR.50 |
| W119 | 6 | 350S162-43 | 1'-9 5/8" | 12.30 | A913-GR.50 |
| W121 | 6 | 350S162-43 | 1'-9 3/8" | 12.15 | A913-GR.50 |
| W129 | 6 | 350S162-43 | 2'-2 1/4" | 14.92 | A913-GR.50 |
| W134 | 6 | 350S162-43 | 1'-6 5/16" | 10.40 | A913-GR.50 |
| W140 | 6 | 350S162-43 | 1'-5 13/16" | 10.13 | A913-GR.50 |
| W141 | 6 | 350S162-43 | 1'-6 3/16" | 10.35 | A913-GR.50 |
| W142 | 6 | 350S162-43 | 1'-6 5/8" | 10.58 | A913-GR.50 |
| W243 | 6 | 350S162-43 | 1'-7 13/16" | 11.25 | A913-GR.50 |
| W274 | 6 | 350S162-43 | 1'-7 3/8" | 11.03 | A913-GR.50 |
| W394 | 6 | 350S162-43 | 0'-7 1/4" | 4.14 | A913-GR.50 |
| W395 | 6 | 350S162-43 | 0'-7 3/8" | 4.18 | A913-GR.50 |
| W397 | 6 | 350S162-43 | 0'-7 7/16" | 4.24 | A913-GR.50 |
| W398 | 6 | 350S162-43 | 0'-7 11/16" | 4.37 | A913-GR.50 |
| W399 | 6 | 350S162-43 | 0'-7 5/8" | 4.32 | A913-GR.50 |
| W401 | 6 | 350S162-43 | 0'-8 1/2" | 4.84 | A913-GR.50 |
| W402 | 6 | 350S162-43 | 0'-8 3/8" | 4.75 | A913-GR.50 |
| W403 | 6 | 350S162-43 | 0'-10 7/16" | 5.92 | A913-GR.50 |
| W404 | 6 | 350S162-43 | 1'-5 1/16" | 9.69 | A913-GR.50 |
| W405 | 6 | 350S162-43 | 1'-5 7/16" | 9.90 | A913-GR.50 |
| W407 | 6 | 350S162-43 | 1'-7" | 10.80 | A913-GR.50 |
| W408 | 6 | 350S162-43 | 1'-8 3/16" | 11.47 | A913-GR.50 |
| W409 | 6 | 350S162-43 | 1'-9" | 11.93 | A913-GR.50 |
| W410 | 6 | 350S162-43 | 0'-10 11/16" | 6.09 | A913-GR.50 |
| W411 | 6 | 350S162-43 | 1'-11 1/2" | 13.37 | A913-GR.50 |
| W412 | 6 | 350S162-43 | 2'-0 3/8" | 13.84 | A913-GR.50 |
| W413 | 6 | 350S162-43 | 2'-0 5/8" | 13.99 | A913-GR.50 |
| W414 | 6 | 350S162-43 | 2'-0 7/8" | 14.15 | A913-GR.50 |
| W415 | 6 | 350S162-43 | 2'-1 3/16" | 14.30 | A913-GR.50 |
| W416 | 6 | 350S162-43 | 2'-1 7/16" | 14.46 | A913-GR.50 |
| W417 | 6 | 350S162-43 | 2'-1 15/16" | 14.76 | A913-GR.50 |
| W418 | 6 | 350S162-43 | 2'-2 9/16" | 15.09 | A913-GR.50 |
| W419 | 6 | 350S162-43 | 2'-0 1/8" | 13.72 | A913-GR.50 |
| W420 | 6 | 350S162-43 | 4'-7 7/16" | 31.52 | A913-GR.50 |
| W421 | 6 | 350S162-43 | 0'-7 1/4" | 4.11 | A913-GR.50 |
| W422 | 12 | 350S162-43 | 0'-7 1/8" | 8.07 | A913-GR.50 |
| | | TOTAL WEIGHT THIS DRAWING | | 682 | |

FRONT VIEW

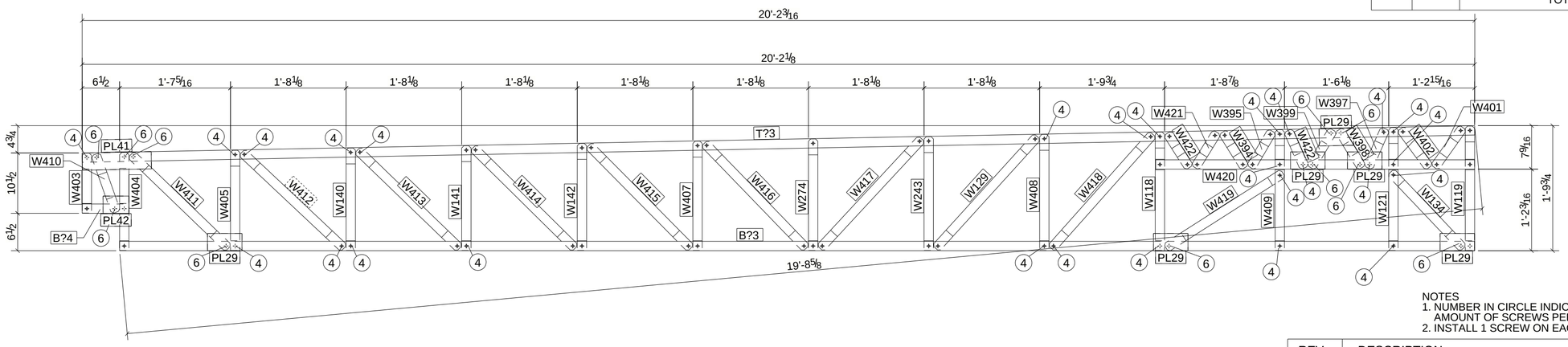


NOTES
1. NUMBER IN CIRCLE INDICATES THE TOTAL AMOUNT OF SCREWS PER CONNECTION ON BOTH SIDES.
2. INSTALL 1 SCREW ON EACH SIDE OF TRUSS UNLESS NOTED OTHERWISE

| REV | DESCRIPTION | DATE |
|---|---|---|
| | | |

| | | | |
|---|---|---|---|
| DESCRIPTION | | | |
| PROJECT NAME | | | |
| DRAWN BY | | JOB No. | DRG No. |
| DATE DRAWN | 07/19/2024 | | TR11 |

Tekla structures

# BILL OF MATERIAL

| MARK | QTY | DESCRIPTION | LENGTH | WEIGHT | REMARKS |
|---|---|---|---|---|---|
| TR12 | 3 | TRUSSES | | | SQ-2 |
| BC51 | 3 | 350S162-43 | 24'-2 3/4" | 82.62 | A913-GR.50 |
| T?5 | 3 | 350S162-43 | 24'-2 13/16" | 82.64 | A913-GR.50 |
| W99 | 3 | 350S162-43 | 2'-1 1/2" | 7.25 | A913-GR.50 |
| W107 | 3 | 350S162-43 | 1'-4" | 4.54 | A913-GR.50 |
| W117 | 3 | 350S162-43 | 1'-8 3/16" | 5.74 | A913-GR.50 |
| W142 | 3 | 350S162-43 | 1'-6 5/8" | 5.30 | A913-GR.50 |
| W144 | 3 | 350S162-43 | 1'-7 1/2" | 5.54 | A913-GR.50 |
| W145 | 3 | 350S162-43 | 1'-7 15/16" | 5.66 | A913-GR.50 |
| W151 | 3 | 350S162-43 | 2'-1 1/2" | 7.25 | A913-GR.50 |
| W152 | 3 | 350S162-43 | 1'-5 7/16" | 4.95 | A913-GR.50 |
| W160 | 3 | 350S162-43 | 1'-10 3/16" | 6.31 | A913-GR.50 |
| W161 | 3 | 350S162-43 | 1'-10 7/16" | 6.37 | A913-GR.50 |
| W176 | 3 | 350S162-43 | 2'-0 11/16" | 7.01 | A913-GR.50 |
| W179 | 3 | 350S162-43 | 2'-2" | 7.38 | A913-GR.50 |
| W181 | 3 | 350S162-43 | 2'-2 7/8" | 7.65 | A913-GR.50 |
| W234 | 3 | 350S162-43 | 1'-11 7/16" | 6.65 | A913-GR.50 |
| W265 | 3 | 350S162-43 | 1'-4 7/16" | 4.66 | A913-GR.50 |
| W281 | 3 | 350S162-43 | 1'-10 15/16" | 6.51 | A913-GR.50 |
| W299 | 3 | 350S162-43 | 1'-9 5/8" | 6.15 | A913-GR.50 |
| W303 | 3 | 350S162-43 | 1'-7 1/16" | 5.42 | A913-GR.50 |
| W443 | 3 | 350S162-43 | 2'-2 5/8" | 7.56 | A913-GR.50 |
| W457 | 3 | 350S162-43 | 2'-2 5/16" | 7.48 | A913-GR.50 |
| W460 | 3 | 350S162-43 | 1'-10 11/16" | 6.44 | A913-GR.50 |
| W470 | 3 | 350S162-43 | 2'-1 1/4" | 7.17 | A913-GR.50 |
| W484 | 3 | 350S162-43 | 1'-8 7/16" | 5.81 | A913-GR.50 |
| W485 | 3 | 350S162-43 | 1'-9" | 5.96 | A913-GR.50 |
| W486 | 3 | 350S162-43 | 1'-9 3/8" | 6.08 | A913-GR.50 |
| W487 | 6 | 350S162-43 | 1'-1 9/16" | 7.72 | A913-GR.50 |
| W611 | 3 | 350S162-43 | 1'-4 7/8" | 4.79 | A913-GR.50 |
| W612 | 3 | 350S162-43 | 1'-5 1/16" | 4.84 | A913-GR.50 |
| W613 | 3 | 350S162-43 | 1'-5 3/8" | 4.93 | A913-GR.50 |
| W614 | 3 | 350S162-43 | 1'-5 13/16" | 5.05 | A913-GR.50 |
| W615 | 3 | 350S162-43 | 1'-6 3/16" | 5.18 | A913-GR.50 |
| W616 | 3 | 350S162-43 | 1'-8 11/16" | 5.89 | A913-GR.50 |
| | | TOTAL WEIGHT THIS DRAWING | | 361 | |

FRONT VIEW

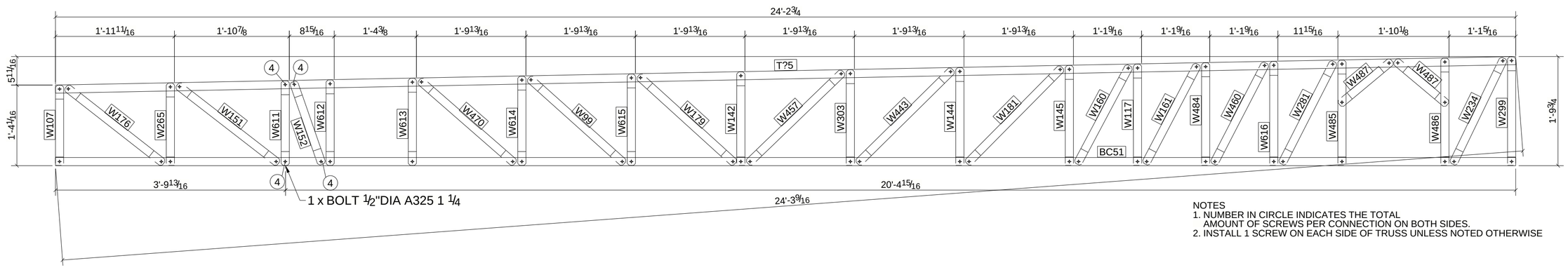


NOTES
1. NUMBER IN CIRCLE INDICATES THE TOTAL AMOUNT OF SCREWS PER CONNECTION ON BOTH SIDES.
2. INSTALL 1 SCREW ON EACH SIDE OF TRUSS UNLESS NOTED OTHERWISE

| REV | DESCRIPTION | DATE |
|---|---|---|
| | | |

| | | | |
|---|---|---|---|
| DESCRIPTION | | | |
| PROJECT NAME | | | |
| DRAWN BY | | JOB No. | DRG No. |
| DATE DRAWN | 07/19/2024 | | TR12 |

Tekla structures

# BILL OF MATERIAL

| MARK | QTY | DESCRIPTION | LENGTH | WEIGHT | REMARKS |
|---|---|---|---|---|---|
| TR13 | 2 | TRUSSES | | | SQ-2 |
| BC27 | 2 | 350S162-43 | 24'-2 3/4" | 55.08 | A913-GR.50 |
| TC26 | 2 | 350S162-43 | 24'-2 13/16" | 55.09 | A913-GR.50 |
| W98 | 2 | 350S162-43 | 2'-1 13/16" | 4.89 | A913-GR.50 |
| W99 | 2 | 350S162-43 | 2'-1 9/16" | 4.84 | A913-GR.50 |
| W107 | 2 | 350S162-43 | 1'-4" | 3.03 | A913-GR.50 |
| W109 | 2 | 350S162-43 | 1'-4 7/8" | 3.19 | A913-GR.50 |
| W117 | 2 | 350S162-43 | 1'-8 3/16" | 3.82 | A913-GR.50 |
| W138 | 2 | 350S162-43 | 1'-5 1/16" | 3.23 | A913-GR.50 |
| W140 | 2 | 350S162-43 | 1'-5 13/16" | 3.37 | A913-GR.50 |
| W141 | 2 | 350S162-43 | 1'-6 3/16" | 3.45 | A913-GR.50 |
| W142 | 2 | 350S162-43 | 1'-6 5/8" | 3.53 | A913-GR.50 |
| W145 | 2 | 350S162-43 | 1'-7 15/16" | 3.77 | A913-GR.50 |
| W146 | 2 | 350S162-43 | 1'-8 7/16" | 3.87 | A913-GR.50 |
| W147 | 2 | 350S162-43 | 1'-8 11/16" | 3.91 | A913-GR.50 |
| W148 | 2 | 350S162-43 | 1'-5 3/8" | 3.29 | A913-GR.50 |
| W149 | 2 | 350S162-43 | 1'-7 1/2" | 3.69 | A913-GR.50 |
| W151 | 2 | 350S162-43 | 2'-1 1/2" | 4.83 | A913-GR.50 |
| W152 | 2 | 350S162-43 | 1'-5 7/16" | 3.30 | A913-GR.50 |
| W158 | 2 | 350S162-43 | 1'-9 13/16" | 4.13 | A913-GR.50 |
| W159 | 2 | 350S162-43 | 1'-10" | 4.17 | A913-GR.50 |
| W160 | 2 | 350S162-43 | 1'-10 1/4" | 4.21 | A913-GR.50 |
| W161 | 2 | 350S162-43 | 1'-10 7/16" | 4.25 | A913-GR.50 |
| W163 | 2 | 350S162-43 | 1'-8 15/16" | 3.96 | A913-GR.50 |
| W176 | 2 | 350S162-43 | 2'-0 5/8" | 4.67 | A913-GR.50 |
| W181 | 2 | 350S162-43 | 2'-2 15/16" | 5.10 | A913-GR.50 |
| W265 | 2 | 350S162-43 | 1'-4 7/16" | 3.11 | A913-GR.50 |
| W299 | 2 | 350S162-43 | 1'-9 5/8" | 4.10 | A913-GR.50 |
| W303 | 2 | 350S162-43 | 1'-7 1/16" | 3.61 | A913-GR.50 |
| W443 | 2 | 350S162-43 | 2'-2 5/8" | 5.04 | A913-GR.50 |
| W457 | 2 | 350S162-43 | 2'-2 5/16" | 4.99 | A913-GR.50 |
| W470 | 2 | 350S162-43 | 2'-1 1/4" | 4.78 | A913-GR.50 |
| W617 | 2 | 350S162-43 | 1'-9 7/16" | 4.06 | A913-GR.50 |
| W618 | 2 | 350S162-43 | 1'-10 1/4" | 4.21 | A913-GR.50 |
| W694 | 4 | 350S162-43 | 1'-4 3/16" | 6.14 | A913-GR.50 |
| | | TOTAL WEIGHT THIS DRAWING | | 241 | |

FRONT VIEW

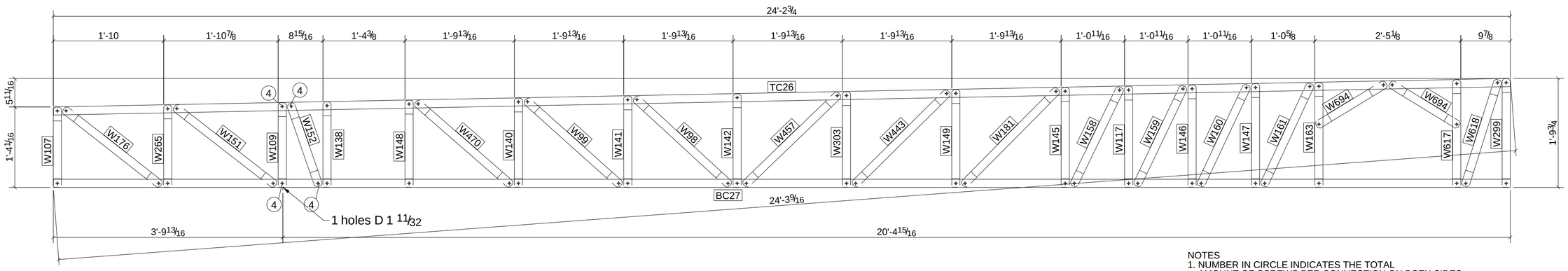


NOTES
1. NUMBER IN CIRCLE INDICATES THE TOTAL AMOUNT OF SCREWS PER CONNECTION ON BOTH SIDES.
2. INSTALL 1 SCREW ON EACH SIDE OF TRUSS UNLESS NOTED OTHERWISE

| REV | DESCRIPTION | DATE |
|---|---|---|
| | | |

| | | | |
|---|---|---|---|
| DESCRIPTION | | | |
| PROJECT NAME | | | |
| DRAWN BY | | JOB No. | DRG No. |
| DATE DRAWN | 07/19/2024 | | TR13 |

Tekla structures

# BILL OF MATERIAL

| MARK | QTY | DESCRIPTION | LENGTH | WEIGHT | REMARKS |
|---|---|---|---|---|---|
| TR14 | 6 | TRUSSES | | | SQ-2 |
| BC52 | 6 | 350S162-43 | 19'-7 5/8" | 133.91 | A913-GR.50 |
| BC49 | 6 | 350S162-43 | 0'-8" | 4.55 | A913-GR.50 |
| PL29 | 72 | PL0.0430X3.0000 | 0'-6" | 15.81 | A36 |
| PL41 | 12 | PL0.0430X3.0000 | 1'-0" | 5.27 | A36 |
| PL42 | 12 | PL0.0430X3.0000 | 0'-4 1/2" | 1.98 | A36 |
| TC49 | 6 | 350S162-43 | 20'-2 3/16" | 137.63 | A913-GR.50 |
| W8 | 6 | 350S162-43 | 2'-4 1/16" | 15.94 | A913-GR.50 |
| W88 | 6 | 350S162-43 | 1'-6 7/16" | 10.47 | A913-GR.50 |
| W112 | 6 | 350S162-43 | 1'-6 1/16" | 10.27 | A913-GR.50 |
| W119 | 6 | 350S162-43 | 1'-9 5/8" | 12.30 | A913-GR.50 |
| W143 | 6 | 350S162-43 | 1'-7 1/8" | 10.86 | A913-GR.50 |
| W148 | 6 | 350S162-43 | 1'-5 3/8" | 9.88 | A913-GR.50 |
| W225 | 6 | 350S162-43 | 1'-11 1/16" | 13.10 | A913-GR.50 |
| W227 | 6 | 350S162-43 | 1'-11 5/16" | 13.25 | A913-GR.50 |
| W285 | 6 | 350S162-43 | 2'-3 7/16" | 15.59 | A913-GR.50 |
| W310 | 6 | 350S162-43 | 1'-8" | 11.37 | A913-GR.50 |
| W403 | 6 | 350S162-43 | 0'-10 7/16" | 5.92 | A913-GR.50 |
| W404 | 6 | 350S162-43 | 1'-5 1/16" | 9.69 | A913-GR.50 |
| W429 | 6 | 350S162-43 | 1'-10 1/2" | 12.80 | A913-GR.50 |
| W444 | 6 | 350S162-43 | 1'-7 9/16" | 11.12 | A913-GR.50 |
| W446 | 6 | 350S162-43 | 1'-8 7/16" | 11.63 | A913-GR.50 |
| W451 | 6 | 350S162-43 | 1'-5 3/4" | 10.08 | A913-GR.50 |
| W454 | 6 | 350S162-43 | 1'-6 3/4" | 10.67 | A913-GR.50 |
| W456 | 6 | 350S162-43 | 2'-3 3/4" | 15.77 | A913-GR.50 |
| W459 | 6 | 350S162-43 | 1'-10 3/4" | 12.95 | A913-GR.50 |
| W461 | 6 | 350S162-43 | 1'-10 1/4" | 12.65 | A913-GR.50 |
| W489 | 6 | 350S162-43 | 1'-8 15/16" | 11.89 | A913-GR.50 |
| W490 | 6 | 350S162-43 | 1'-9 7/16" | 12.19 | A913-GR.50 |
| W492 | 6 | 350S162-43 | 2'-2 3/16" | 14.89 | A913-GR.50 |
| W493 | 6 | 350S162-43 | 1'-3 5/16" | 8.72 | A913-GR.50 |
| W494 | 6 | 350S162-43 | 5'-1 7/8" | 35.15 | A913-GR.50 |
| W499 | 6 | 350S162-43 | 0'-7 9/16" | 4.30 | A913-GR.50 |
| W500 | 6 | 350S162-43 | 0'-7 3/4" | 4.39 | A913-GR.50 |
| W501 | 6 | 350S162-43 | 0'-7 1/4" | 4.12 | A913-GR.50 |
| W502 | 6 | 350S162-43 | 0'-7 1/16" | 4.02 | A913-GR.50 |
| W503 | 6 | 350S162-43 | 0'-7 5/8" | 4.33 | A913-GR.50 |
| W504 | 6 | 350S162-43 | 0'-7 1/2" | 4.25 | A913-GR.50 |
| W528 | 6 | 350S162-43 | 0'-10 9/16" | 6.01 | A913-GR.50 |
| W647 | 6 | 350S162-43 | 1'-9 5/8" | 12.28 | A913-GR.50 |
| W648 | 6 | 350S162-43 | 0'-8 1/8" | 4.61 | A913-GR.50 |
| W649 | 6 | 350S162-43 | 0'-8 5/16" | 4.74 | A913-GR.50 |
| W650 | 6 | 350S162-43 | 0'-8 7/16" | 4.78 | A913-GR.50 |
| W651 | 6 | 350S162-43 | 0'-8 1/4" | 4.69 | A913-GR.50 |
| | | TOTAL WEIGHT THIS DRAWING | | 681 | |

FRONT VIEW

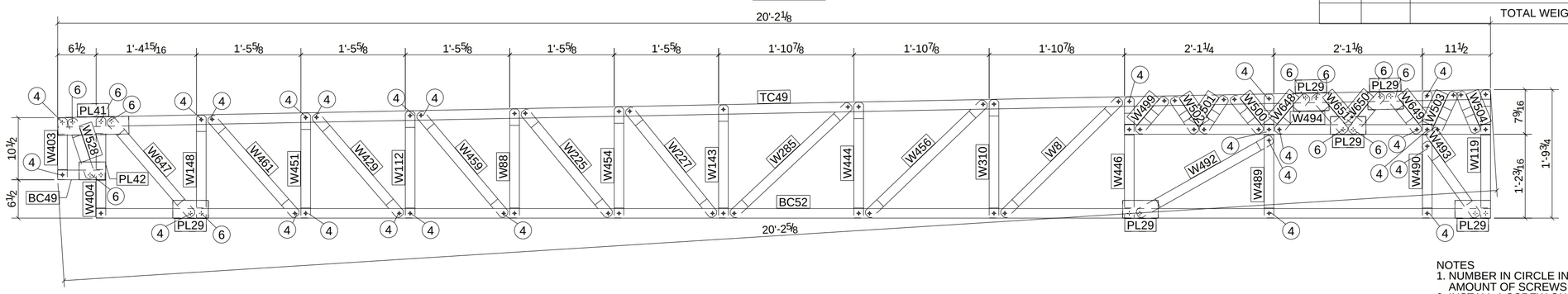


NOTES
1. NUMBER IN CIRCLE INDICATES THE TOTAL AMOUNT OF SCREWS PER CONNECTION ON BOTH SIDES.
2. INSTALL 1 SCREW ON EACH SIDE OF TRUSS UNLESS NOTED OTHERWISE

| REV | DESCRIPTION | DATE |
|---|---|---|
| | | |

| | | | |
|---|---|---|---|
| DESCRIPTION | | | |
| PROJECT NAME | | | |
| DRAWN BY | | JOB No. | DRG No. |
| DATE DRAWN | 07/19/2024 | | TR14 |

Tekla structures

# BILL OF MATERIAL

| MARK | QTY | DESCRIPTION | LENGTH | WEIGHT | REMARKS |
|---|---|---|---|---|---|
| TR15 | 1 | TRUSS | | | SQ-2 |
| BC29 | 1 | 350S162-43 | 24'-0" | 27.28 | A913-GR.50 |
| PL29 | 20 | PL0.0430X3.0000 | 0'-6" | 4.39 | A36 |
| PL42 | 2 | PL0.0430X3.0000 | 0'-4 1/2" | 0.33 | A36 |
| TC28 | 1 | 350S162-43 | 24'-0 1/16" | 27.29 | A913-GR.50 |
| W84 | 1 | 350S162-43 | 1'-8 1/8" | 1.90 | A913-GR.50 |
| W85 | 1 | 350S162-43 | 1'-7 11/16" | 1.87 | A913-GR.50 |
| W100 | 1 | 350S162-43 | 2'-1 3/16" | 2.38 | A913-GR.50 |
| W107 | 1 | 350S162-43 | 1'-4" | 1.51 | A913-GR.50 |
| W109 | 1 | 350S162-43 | 1'-4 7/8" | 1.60 | A913-GR.50 |
| W110 | 1 | 350S162-43 | 1'-5 1/4" | 1.64 | A913-GR.50 |
| W111 | 1 | 350S162-43 | 1'-5 11/16" | 1.67 | A913-GR.50 |
| W112 | 1 | 350S162-43 | 1'-6 1/16" | 1.71 | A913-GR.50 |
| W151 | 1 | 350S162-43 | 2'-1 1/2" | 2.41 | A913-GR.50 |
| W167 | 1 | 350S162-43 | 1'-6 1/2" | 1.75 | A913-GR.50 |
| W169 | 1 | 350S162-43 | 1'-7 5/16" | 1.83 | A913-GR.50 |
| W170 | 1 | 350S162-43 | 1'-8 1/2" | 1.94 | A913-GR.50 |
| W171 | 1 | 350S162-43 | 1'-9 9/16" | 2.04 | A913-GR.50 |
| W172 | 1 | 350S162-43 | 1'-9 7/16" | 2.03 | A913-GR.50 |
| W173 | 1 | 350S162-43 | 1'-8 7/8" | 1.98 | A913-GR.50 |
| W174 | 1 | 350S162-43 | 2'-0 1/16" | 2.28 | A913-GR.50 |
| W175 | 1 | 350S162-43 | 2'-0 5/16" | 2.31 | A913-GR.50 |
| W176 | 2 | 350S162-43 | 2'-0 5/8" | 4.66 | A913-GR.50 |
| W177 | 1 | 350S162-43 | 2'-0 7/8" | 2.36 | A913-GR.50 |
| W178 | 1 | 350S162-43 | 2'-1 11/16" | 2.43 | A913-GR.50 |
| W179 | 1 | 350S162-43 | 2'-1 15/16" | 2.46 | A913-GR.50 |
| W180 | 1 | 350S162-43 | 2'-2 1/4" | 2.49 | A913-GR.50 |
| W182 | 1 | 350S162-43 | 1'-1 15/16" | 1.32 | A913-GR.50 |
| W265 | 1 | 350S162-43 | 1'-4 7/16" | 1.55 | A913-GR.50 |
| W273 | 1 | 350S162-43 | 1'-11 13/16" | 2.25 | A913-GR.50 |
| W329 | 1 | 350S162-43 | 2'-2 9/16" | 2.52 | A913-GR.50 |
| W495 | 1 | 350S162-43 | 0'-8" | 0.75 | A913-GR.50 |
| W496 | 1 | 350S162-43 | 0'-8 3/16" | 0.78 | A913-GR.50 |
| W497 | 1 | 350S162-43 | 0'-8 1/4" | 0.78 | A913-GR.50 |
| W498 | 1 | 350S162-43 | 0'-8 1/16" | 0.76 | A913-GR.50 |
| W505 | 1 | 350S162-43 | 4'-8 13/16" | 5.38 | A913-GR.50 |
| W506 | 1 | 350S162-43 | 0'-8 1/2" | 0.81 | A913-GR.50 |
| W507 | 1 | 350S162-43 | 0'-7 15/16" | 0.75 | A913-GR.50 |
| W508 | 2 | 350S162-43 | 0'-7 13/16" | 1.48 | A913-GR.50 |
| W718 | 1 | 350S162-43 | 1'-6 7/8" | 1.79 | A913-GR.50 |
| | | TOTAL WEIGHT THIS DRAWING | | 127 | |

FRONT VIEW

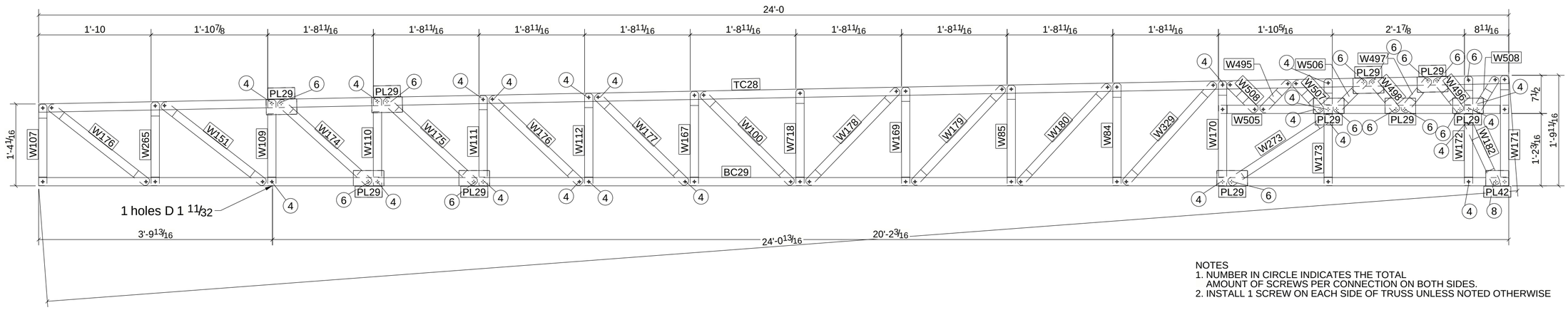


NOTES
1. NUMBER IN CIRCLE INDICATES THE TOTAL AMOUNT OF SCREWS PER CONNECTION ON BOTH SIDES.
2. INSTALL 1 SCREW ON EACH SIDE OF TRUSS UNLESS NOTED OTHERWISE

| REV | DESCRIPTION | DATE |
|---|---|---|
| | | |

| | | | |
|---|---|---|---|
| DESCRIPTION | | | |
| PROJECT NAME | | | |
| DRAWN BY | | JOB No. | DRG No. |
| DATE DRAWN | 07/19/2024 | | TR15 |

Tekla structures

# BILL OF MATERIAL

| MARK | QTY | DESCRIPTION | LENGTH | WEIGHT | REMARKS |
|---|---|---|---|---|---|
| TR16 | 3 | TRUSSES | | | SQ-2 |
| BC48 | 3 | 350S162-43 | 19'-4 7/8" | 66.18 | A913-GR.50 |
| BC93 | 3 | 350S162-43 | 0'-8 1/8" | 2.31 | A913-GR.50 |
| PL29 | 42 | PL0.0430X3.0000 | 0'-6" | 9.22 | A36 |
| PL41 | 6 | PL0.0430X3.0000 | 1'-0" | 2.63 | A36 |
| PL42 | 12 | PL0.0430X3.0000 | 0'-4 1/2" | 1.98 | A36 |
| TC46 | 3 | 350S162-43 | 19'-11 7/16" | 68.04 | A913-GR.50 |
| W8 | 3 | 350S162-43 | 2'-4 1/16" | 7.97 | A913-GR.50 |
| W88 | 3 | 350S162-43 | 1'-6 7/16" | 5.23 | A913-GR.50 |
| W112 | 3 | 350S162-43 | 1'-6 1/16" | 5.14 | A913-GR.50 |
| W143 | 3 | 350S162-43 | 1'-7 1/8" | 5.43 | A913-GR.50 |
| W148 | 3 | 350S162-43 | 1'-5 3/8" | 4.94 | A913-GR.50 |
| W225 | 3 | 350S162-43 | 1'-11 1/16" | 6.55 | A913-GR.50 |
| W227 | 3 | 350S162-43 | 1'-11 5/16" | 6.62 | A913-GR.50 |
| W285 | 3 | 350S162-43 | 2'-3 7/16" | 7.80 | A913-GR.50 |
| W310 | 3 | 350S162-43 | 1'-8" | 5.68 | A913-GR.50 |
| W403 | 3 | 350S162-43 | 0'-10 7/16" | 2.96 | A913-GR.50 |
| W404 | 3 | 350S162-43 | 1'-5 1/16" | 4.84 | A913-GR.50 |
| W429 | 3 | 350S162-43 | 1'-10 1/2" | 6.40 | A913-GR.50 |
| W444 | 3 | 350S162-43 | 1'-7 9/16" | 5.56 | A913-GR.50 |
| W446 | 3 | 350S162-43 | 1'-8 7/16" | 5.81 | A913-GR.50 |
| W447 | 3 | 350S162-43 | 1'-9 9/16" | 6.13 | A913-GR.50 |
| W448 | 3 | 350S162-43 | 1'-8 15/16" | 5.94 | A913-GR.50 |
| W451 | 3 | 350S162-43 | 1'-5 3/4" | 5.04 | A913-GR.50 |
| W454 | 3 | 350S162-43 | 1'-6 3/4" | 5.33 | A913-GR.50 |
| W456 | 3 | 350S162-43 | 2'-3 3/4" | 7.88 | A913-GR.50 |
| W459 | 3 | 350S162-43 | 1'-10 3/4" | 6.47 | A913-GR.50 |
| W461 | 3 | 350S162-43 | 1'-10 1/4" | 6.32 | A913-GR.50 |
| W509 | 3 | 350S162-43 | 0'-7 7/8" | 2.24 | A913-GR.50 |
| W510 | 3 | 350S162-43 | 4'-11 1/16" | 16.78 | A913-GR.50 |
| W512 | 3 | 350S162-43 | 0'-8 5/8" | 2.45 | A913-GR.50 |
| W513 | 3 | 350S162-43 | 0'-8 5/16" | 2.36 | A913-GR.50 |
| W514 | 3 | 350S162-43 | 2'-2" | 7.39 | A913-GR.50 |
| W528 | 3 | 350S162-43 | 0'-10 9/16" | 3.01 | A913-GR.50 |
| W647 | 3 | 350S162-43 | 1'-9 5/8" | 6.14 | A913-GR.50 |
| W671 | 3 | 350S162-43 | 1'-9 7/16" | 6.09 | A913-GR.50 |
| W672 | 3 | 350S162-43 | 0'-8 1/16" | 2.28 | A913-GR.50 |
| W673 | 3 | 350S162-43 | 0'-8 1/4" | 2.34 | A913-GR.50 |
| W674 | 3 | 350S162-43 | 0'-8 1/4" | 2.35 | A913-GR.50 |
| W675 | 3 | 350S162-43 | 0'-8 1/16" | 2.30 | A913-GR.50 |
| W676 | 3 | 350S162-43 | 0'-8 5/8" | 2.45 | A913-GR.50 |
| W677 | 3 | 350S162-43 | 1'-1 11/16" | 3.89 | A913-GR.50 |
| | | TOTAL WEIGHT THIS DRAWING | | 336 | |

FRONT VIEW

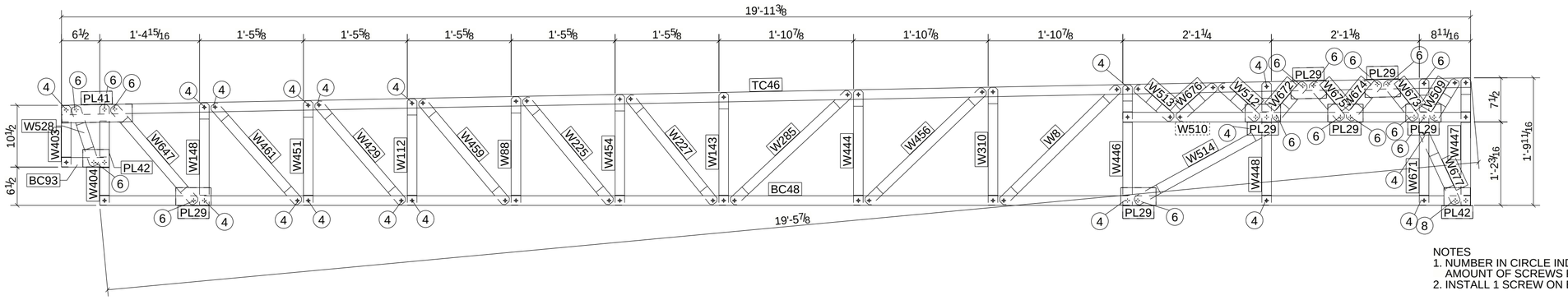


NOTES
1. NUMBER IN CIRCLE INDICATES THE TOTAL AMOUNT OF SCREWS PER CONNECTION ON BOTH SIDES.
2. INSTALL 1 SCREW ON EACH SIDE OF TRUSS UNLESS NOTED OTHERWISE

| REV | DESCRIPTION | DATE |
|---|---|---|
| | | |

| | | | |
|---|---|---|---|
| DESCRIPTION | | | |
| PROJECT NAME | | | |
| DRAWN BY | | JOB No. | DRG No. |
| DATE DRAWN | 07/19/2024 | | TR16 |

Tekla structures

# BILL OF MATERIAL

| MARK | QTY | DESCRIPTION | LENGTH | WEIGHT | REMARKS |
|---|---|---|---|---|---|
| TR17 | 3 | TRUSSES | | | SQ-2 |
| BC75 | 3 | 350S162-43 | 19'-4 7/8" | 66.18 | A913-GR.50 |
| BC94 | 3 | 350S162-43 | 0'-8 1/16" | 2.29 | A913-GR.50 |
| TC45 | 3 | 350S162-43 | 19'-11 7/16" | 68.04 | A913-GR.50 |
| W157 | 3 | 350S162-43 | 2'-3 1/16" | 7.69 | A913-GR.50 |
| W178 | 3 | 350S162-43 | 2'-1 11/16" | 7.30 | A913-GR.50 |
| W194 | 3 | 350S162-43 | 2'-2 3/4" | 7.61 | A913-GR.50 |
| W195 | 3 | 350S162-43 | 2'-2 1/2" | 7.52 | A913-GR.50 |
| W211 | 3 | 350S162-43 | 2'-3 5/16" | 7.77 | A913-GR.50 |
| W279 | 3 | 350S162-43 | 2'-4 5/8" | 8.13 | A913-GR.50 |
| W337 | 3 | 350S162-43 | 1'-9 1/16" | 5.99 | A913-GR.50 |
| W338 | 3 | 350S162-43 | 1'-8 5/8" | 5.86 | A913-GR.50 |
| W339 | 3 | 350S162-43 | 1'-8 3/16" | 5.73 | A913-GR.50 |
| W403 | 3 | 350S162-43 | 0'-10 7/16" | 2.96 | A913-GR.50 |
| W427 | 3 | 350S162-43 | 1'-7 1/4" | 5.47 | A913-GR.50 |
| W428 | 3 | 350S162-43 | 1'-7 11/16" | 5.60 | A913-GR.50 |
| W437 | 3 | 350S162-43 | 1'-5" | 4.83 | A913-GR.50 |
| W438 | 3 | 350S162-43 | 2'-4 3/16" | 8.01 | A913-GR.50 |
| W462 | 3 | 350S162-43 | 1'-9 1/2" | 6.11 | A913-GR.50 |
| W463 | 3 | 350S162-43 | 1'-6 13/16" | 5.34 | A913-GR.50 |
| W464 | 3 | 350S162-43 | 1'-6 5/16" | 5.21 | A913-GR.50 |
| W465 | 3 | 350S162-43 | 1'-5 7/8" | 5.08 | A913-GR.50 |
| W466 | 3 | 350S162-43 | 1'-5 7/16" | 4.95 | A913-GR.50 |
| W511 | 3 | 350S162-43 | 2'-3 7/8" | 7.93 | A913-GR.50 |
| W528 | 3 | 350S162-43 | 0'-10 9/16" | 3.01 | A913-GR.50 |
| W678 | 3 | 350S162-43 | 2'-4 1/2" | 8.10 | A913-GR.50 |
| W679 | 3 | 350S162-43 | 2'-4 13/16" | 8.19 | A913-GR.50 |
| | | TOTAL WEIGHT THIS DRAWING | | 281 | |

FRONT VIEW

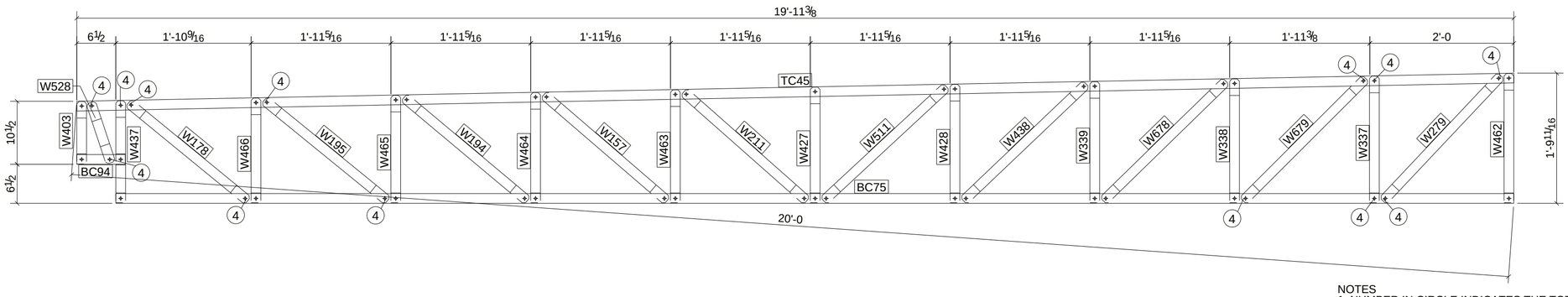


NOTES
1. NUMBER IN CIRCLE INDICATES THE TOTAL AMOUNT OF SCREWS PER CONNECTION ON BOTH SIDES.
2. INSTALL 1 SCREW ON EACH SIDE OF TRUSS UNLESS NOTED OTHERWISE

| REV | DESCRIPTION | DATE |
|---|---|---|
| | | |

| | | | |
|---|---|---|---|
| DESCRIPTION | | | |
| PROJECT NAME | | | |
| DRAWN BY | | JOB No. | DRG No. |
| DATE DRAWN | 07/16/2024 | | TR17 |

Tekla structures

# BILL OF MATERIAL

| MARK | QTY | DESCRIPTION | LENGTH | WEIGHT | REMARKS |
|---|---|---|---|---|---|
| TR18 | 2 | TRUSSES | | | SQ-2 |
| BC30 | 2 | 350S162-43 | 19'-3 1/4" | 43.81 | A913-GR.50 |
| BT163 | 2 | 350S162-43 | 0'-8 1/8" | 1.54 | A913-GR.50 |
| TC29 | 2 | 350S162-43 | 19'-9 13/16" | 45.05 | A913-GR.50 |
| W8 | 2 | 350S162-43 | 2'-4" | 5.31 | A913-GR.50 |
| W186 | 2 | 350S162-43 | 1'-4 11/16" | 3.16 | A913-GR.50 |
| W187 | 2 | 350S162-43 | 0'-10 1/16" | 1.90 | A913-GR.50 |
| W188 | 4 | 350S162-43 | 2'-4 11/16" | 10.88 | A913-GR.50 |
| W190 | 2 | 350S162-43 | 2'-4 3/8" | 5.37 | A913-GR.50 |
| W192 | 2 | 350S162-43 | 2'-3 11/16" | 5.25 | A913-GR.50 |
| W193 | 2 | 350S162-43 | 2'-3 1/8" | 5.13 | A913-GR.50 |
| W194 | 2 | 350S162-43 | 2'-2 3/4" | 5.07 | A913-GR.50 |
| W195 | 2 | 350S162-43 | 2'-2 7/16" | 5.01 | A913-GR.50 |
| W198 | 2 | 350S162-43 | 0'-10 7/16" | 1.98 | A913-GR.50 |
| W299 | 2 | 350S162-43 | 1'-9 5/8" | 4.10 | A913-GR.50 |
| W470 | 2 | 350S162-43 | 2'-1 5/16" | 4.79 | A913-GR.50 |
| W652 | 2 | 350S162-43 | 1'-9 1/8" | 4.01 | A913-GR.50 |
| W653 | 2 | 350S162-43 | 1'-8 5/8" | 3.91 | A913-GR.50 |
| W654 | 2 | 350S162-43 | 1'-8 1/8" | 3.82 | A913-GR.50 |
| W655 | 2 | 350S162-43 | 1'-7 5/8" | 3.72 | A913-GR.50 |
| W656 | 2 | 350S162-43 | 1'-7 1/8" | 3.63 | A913-GR.50 |
| W657 | 2 | 350S162-43 | 1'-6 5/8" | 3.53 | A913-GR.50 |
| W658 | 2 | 350S162-43 | 1'-6 3/16" | 3.44 | A913-GR.50 |
| W659 | 2 | 350S162-43 | 1'-5 11/16" | 3.35 | A913-GR.50 |
| W660 | 2 | 350S162-43 | 1'-5 3/16" | 3.25 | A913-GR.50 |
| W695 | 2 | 350S162-43 | 2'-2 3/16" | 4.96 | A913-GR.50 |
| | | TOTAL WEIGHT THIS DRAWING | | 186 | |

FRONT VIEW

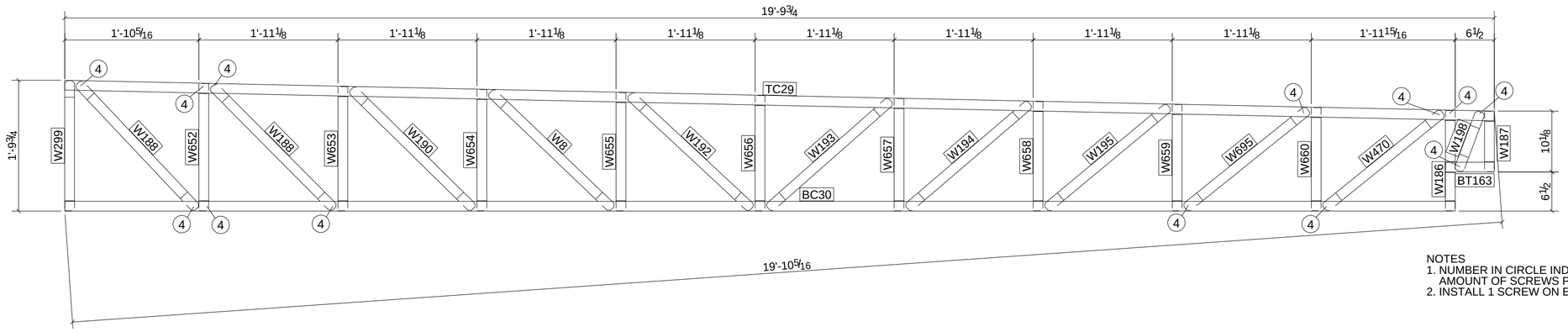


NOTES
1. NUMBER IN CIRCLE INDICATES THE TOTAL AMOUNT OF SCREWS PER CONNECTION ON BOTH SIDES.
2. INSTALL 1 SCREW ON EACH SIDE OF TRUSS UNLESS NOTED OTHERWISE

| REV | DESCRIPTION | DATE |
|---|---|---|
| | | |

| | | | |
|---|---|---|---|
| DESCRIPTION | | | |
| PROJECT NAME | | | |
| DRAWN BY | | JOB No. | DRG No. |
| DATE DRAWN | 07/16/2024 | | TR18 |

Tekla structures

# BILL OF MATERIAL

| MARK | QTY | DESCRIPTION | LENGTH | WEIGHT | REMARKS |
|---|---|---|---|---|---|
| TR19 | 4 | TRUSSES | | | SQ-2 |
| BC31 | 4 | 350S162-43 | 1'-7 1/16" | 7.22 | A913-GR.50 |
| TC30 | 4 | 350S162-43 | 1'-7 1/16" | 7.22 | A913-GR.50 |
| W158 | 4 | 350S162-43 | 1'-9 13/16" | 8.26 | A913-GR.50 |
| W199 | 4 | 350S162-43 | 1'-4 1/16" | 6.08 | A913-GR.50 |
| W265 | 4 | 350S162-43 | 1'-4 3/8" | 6.21 | A913-GR.50 |
| | | TOTAL WEIGHT THIS DRAWING | | 35 | |

FRONT VIEW

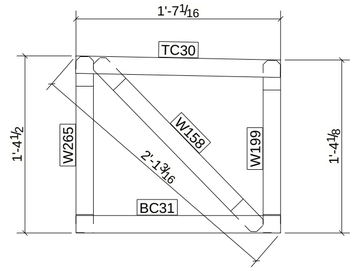


NOTES
1. NUMBER IN CIRCLE INDICATES THE TOTAL
   AMOUNT OF SCREWS PER CONNECTION ON BOTH SIDES.
2. INSTALL 1 SCREW ON EACH SIDE OF TRUSS UNLESS NOTED OTHERWISE

| REV | DESCRIPTION | DATE |
|---|---|---|
| | | |

| | | | |
|---|---|---|---|
| DESCRIPTION | | | |
| PROJECT NAME | | | |
| DRAWN BY | | JOB No. | DRG No. |
| DATE DRAWN | 07/16/2024 | | TR19 |

Tekla structures

# BILL OF MATERIAL

| MARK | QTY | DESCRIPTION | LENGTH | WEIGHT | REMARKS |
|---|---|---|---|---|---|
| TR20 | 6 | TRUSSES | | | SQ-2 |
| BC103 | 6 | 350S162-43 | 21'-10 7/16" | 149.15 | A913-GR.50 |
| TC94 | 6 | 350S162-43 | 21'-10 7/16" | 149.15 | A913-GR.50 |
| W108 | 6 | 350S162-43 | 1'-4 1/2" | 9.37 | A913-GR.50 |
| W109 | 6 | 350S162-43 | 1'-4 7/8" | 9.60 | A913-GR.50 |
| W110 | 6 | 350S162-43 | 1'-5 5/16" | 9.82 | A913-GR.50 |
| W111 | 6 | 350S162-43 | 1'-5 11/16" | 10.05 | A913-GR.50 |
| W112 | 6 | 350S162-43 | 1'-6 1/16" | 10.28 | A913-GR.50 |
| W115 | 6 | 350S162-43 | 1'-7 5/16" | 10.99 | A913-GR.50 |
| W157 | 6 | 350S162-43 | 2'-3" | 15.35 | A913-GR.50 |
| W167 | 6 | 350S162-43 | 1'-6 1/2" | 10.50 | A913-GR.50 |
| W183 | 6 | 350S162-43 | 1'-9 3/16" | 12.04 | A913-GR.50 |
| W191 | 6 | 350S162-43 | 2'-4" | 15.90 | A913-GR.50 |
| W192 | 6 | 350S162-43 | 2'-3 5/8" | 15.72 | A913-GR.50 |
| W199 | 6 | 350S162-43 | 1'-4 1/16" | 9.11 | A913-GR.50 |
| W211 | 6 | 350S162-43 | 2'-3 5/16" | 15.53 | A913-GR.50 |
| W232 | 6 | 350S162-43 | 2'-0" | 13.63 | A913-GR.50 |
| W233 | 6 | 350S162-43 | 1'-11 11/16" | 13.47 | A913-GR.50 |
| W242 | 6 | 350S162-43 | 1'-8 1/4" | 11.52 | A913-GR.50 |
| W243 | 6 | 350S162-43 | 1'-7 13/16" | 11.25 | A913-GR.50 |
| W299 | 6 | 350S162-43 | 1'-9 5/8" | 12.30 | A913-GR.50 |
| W434 | 6 | 350S162-43 | 2'-0 1/4" | 13.77 | A913-GR.50 |
| W477 | 6 | 350S162-43 | 1'-11 1/4" | 13.21 | A913-GR.50 |
| W561 | 6 | 350S162-43 | 1'-11" | 13.06 | A913-GR.50 |
| W562 | 6 | 350S162-43 | 1'-10 11/16" | 12.89 | A913-GR.50 |
| W609 | 6 | 350S162-43 | 2'-3 13/16" | 15.81 | A913-GR.50 |
| W610 | 6 | 350S162-43 | 2'-2 11/16" | 15.17 | A913-GR.50 |
| W616 | 6 | 350S162-43 | 1'-8 3/4" | 11.78 | A913-GR.50 |
| W644 | 6 | 350S162-43 | 1'-11 7/16" | 13.30 | A913-GR.50 |
| W718 | 6 | 350S162-43 | 1'-6 7/8" | 10.73 | A913-GR.50 |
| | | TOTAL WEIGHT THIS DRAWING | | 634 | |

FRONT VIEW

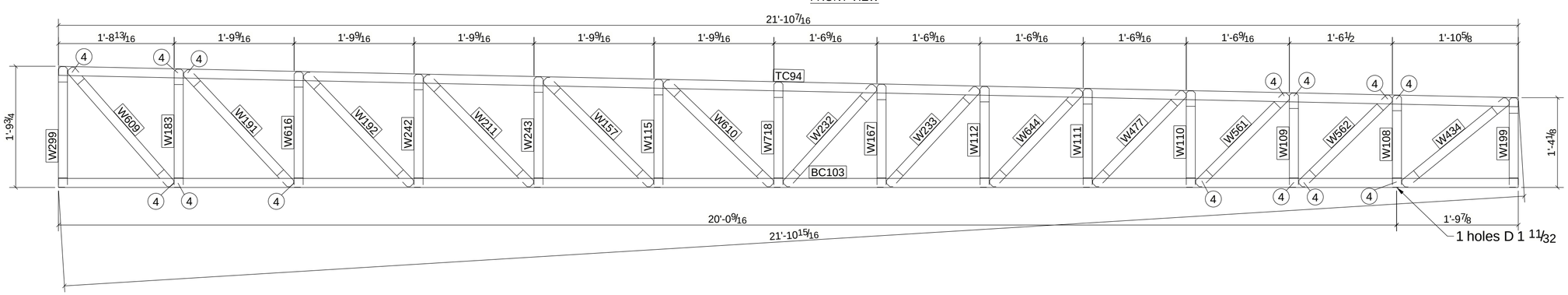


NOTES
1. NUMBER IN CIRCLE INDICATES THE TOTAL AMOUNT OF SCREWS PER CONNECTION ON BOTH SIDES.
2. INSTALL 1 SCREW ON EACH SIDE OF TRUSS UNLESS NOTED OTHERWISE

| REV | DESCRIPTION | DATE |
|---|---|---|
| | | |

| | | | |
|---|---|---|---|
| DESCRIPTION | | | |
| PROJECT NAME | | | |
| DRAWN BY | | JOB No. | DRG No. |
| DATE DRAWN | 07/19/2024 | | TR20 |

Tekla structures

# BILL OF MATERIAL

| MARK | QTY | DESCRIPTION | LENGTH | WEIGHT | REMARKS |
|---|---|---|---|---|---|
| TR21 | 2 | TRUSSES | | | SQ-2 |
| BC33 | 2 | 350S162-43 | 19'-9 3/4" | 45.04 | A913-GR.50 |
| TC84 | 2 | 350S162-43 | 19'-9 13/16" | 45.05 | A913-GR.50 |
| W90 | 2 | 350S162-43 | 1'-5 9/16" | 3.33 | A913-GR.50 |
| W112 | 2 | 350S162-43 | 1'-6 1/16" | 3.43 | A913-GR.50 |
| W117 | 2 | 350S162-43 | 1'-8 1/8" | 3.81 | A913-GR.50 |
| W138 | 2 | 350S162-43 | 1'-5 1/16" | 3.23 | A913-GR.50 |
| W143 | 2 | 350S162-43 | 1'-7 1/8" | 3.62 | A913-GR.50 |
| W147 | 2 | 350S162-43 | 1'-8 5/8" | 3.91 | A913-GR.50 |
| W156 | 2 | 350S162-43 | 2'-2 3/4" | 5.07 | A913-GR.50 |
| W157 | 2 | 350S162-43 | 2'-3 1/16" | 5.12 | A913-GR.50 |
| W183 | 2 | 350S162-43 | 1'-9 3/16" | 4.01 | A913-GR.50 |
| W202 | 2 | 350S162-43 | 1'-7 5/8" | 3.72 | A913-GR.50 |
| W203 | 2 | 350S162-43 | 1'-6 5/8" | 3.52 | A913-GR.50 |
| W206 | 2 | 350S162-43 | 2'-5 5/16" | 5.55 | A913-GR.50 |
| W207 | 2 | 350S162-43 | 2'-4 15/16" | 5.48 | A913-GR.50 |
| W208 | 2 | 350S162-43 | 2'-4 5/8" | 5.42 | A913-GR.50 |
| W209 | 2 | 350S162-43 | 2'-4 1/4" | 5.35 | A913-GR.50 |
| W210 | 2 | 350S162-43 | 2'-3 11/16" | 5.24 | A913-GR.50 |
| W211 | 2 | 350S162-43 | 2'-3 3/8" | 5.18 | A913-GR.50 |
| W212 | 2 | 350S162-43 | 2'-1 7/8" | 4.90 | A913-GR.50 |
| W220 | 2 | 350S162-43 | 1'-4 9/16" | 3.14 | A913-GR.50 |
| W277 | 2 | 350S162-43 | 2'-5 1/8" | 5.51 | A913-GR.50 |
| W299 | 2 | 350S162-43 | 1'-9 11/16" | 4.10 | A913-GR.50 |
| | | TOTAL WEIGHT THIS DRAWING | | 183 | |

FRONT VIEW

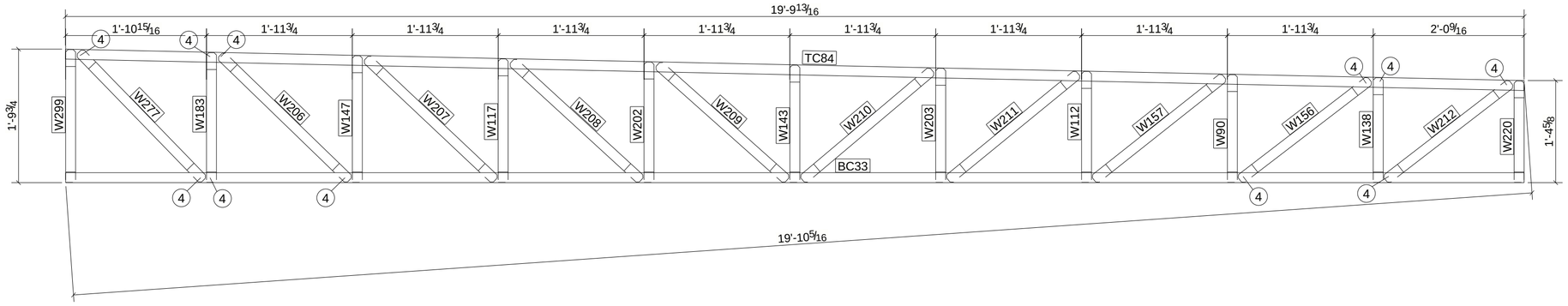


NOTES
1. NUMBER IN CIRCLE INDICATES THE TOTAL AMOUNT OF SCREWS PER CONNECTION ON BOTH SIDES.
2. INSTALL 1 SCREW ON EACH SIDE OF TRUSS UNLESS NOTED OTHERWISE

| REV | DESCRIPTION | DATE |
|---|---|---|
| | | |

| | | | |
|---|---|---|---|
| DESCRIPTION | | | |
| PROJECT NAME | | | |
| DRAWN BY | | JOB No. | DRG No. |
| DATE DRAWN | 07/16/2024 | | TR21 |

Tekla structures

# BILL OF MATERIAL

| MARK | QTY | DESCRIPTION | LENGTH | WEIGHT | REMARKS |
|---|---|---|---|---|---|
| TR22 | 2 | TRUSSES | | | SQ-2 |
| BC35 | 2 | 350S162-43 | 16'-0 13/16" | 36.53 | A913-GR.50 |
| BC34 | 2 | 350S162-43 | 4'-9 1/2" | 10.89 | A913-GR.50 |
| PL29 | 4 | PL0.0430X3.0000 | 0'-6" | 0.88 | A36 |
| PL32 | 4 | PL0.0430X3.0000 | 1'-0 1/2" | 1.83 | A36 |
| PL34 | 4 | PL0.0430X3.0000 | 1'-8 9/16" | 3.01 | A36 |
| PL35 | 4 | PL0.0430X3.0000 | 1'-8 5/16" | 2.97 | A36 |
| PL38 | 4 | PL0.0430X2.9994 | 0'-6 1/16" | 0.88 | A36 |
| TC31 | 2 | 350S162-43 | 21'-4 7/8" | 48.66 | A913-GR.50 |
| W140 | 2 | 350S162-43 | 1'-5 13/16" | 3.37 | A913-GR.50 |
| W141 | 2 | 350S162-43 | 1'-6 1/4" | 3.45 | A913-GR.50 |
| W142 | 2 | 350S162-43 | 1'-6 5/8" | 3.53 | A913-GR.50 |
| W144 | 2 | 350S162-43 | 1'-7 7/16" | 3.69 | A913-GR.50 |
| W148 | 2 | 350S162-43 | 1'-5 3/8" | 3.30 | A913-GR.50 |
| W213 | 2 | 350S162-43 | 1'-9 3/8" | 4.04 | A913-GR.50 |
| W214 | 2 | 350S162-43 | 1'-9 1/16" | 3.99 | A913-GR.50 |
| W216 | 2 | 350S162-43 | 1'-7 7/8" | 3.76 | A913-GR.50 |
| W219 | 2 | 350S162-43 | 1'-5" | 3.22 | A913-GR.50 |
| W220 | 2 | 350S162-43 | 1'-4 9/16" | 3.14 | A913-GR.50 |
| W221 | 2 | 350S162-43 | 1'-4 3/16" | 3.06 | A913-GR.50 |
| W222 | 2 | 350S162-43 | 1'-8 1/4" | 3.84 | A913-GR.50 |
| W223 | 2 | 350S162-43 | 1'-8 7/16" | 3.87 | A913-GR.50 |
| W224 | 2 | 350S162-43 | 0'-9 3/4" | 1.85 | A913-GR.50 |
| W229 | 2 | 350S162-43 | 2'-1 3/8" | 4.81 | A913-GR.50 |
| W237 | 2 | 350S162-43 | 1'-4 15/16" | 3.21 | A913-GR.50 |
| W238 | 2 | 350S162-43 | 1'-8 9/16" | 3.90 | A913-GR.50 |
| W239 | 2 | 350S162-43 | 1'-6 15/16" | 3.59 | A913-GR.50 |
| W240 | 2 | 350S162-43 | 1'-2 3/8" | 2.72 | A913-GR.50 |
| W299 | 2 | 350S162-43 | 1'-9 5/8" | 4.10 | A913-GR.50 |
| W303 | 2 | 350S162-43 | 1'-7 1/16" | 3.61 | A913-GR.50 |
| W616 | 2 | 350S162-43 | 1'-8 3/4" | 3.93 | A913-GR.50 |
| W619 | 2 | 350S162-43 | 1'-11 11/16" | 4.49 | A913-GR.50 |
| W620 | 2 | 350S162-43 | 1'-11 13/16" | 4.51 | A913-GR.50 |
| W621 | 2 | 350S162-43 | 1'-11 1/2" | 4.45 | A913-GR.50 |
| W622 | 2 | 350S162-43 | 1'-2 1/2" | 2.75 | A913-GR.50 |
| W623 | 2 | 350S162-43 | 2'-1 1/16" | 4.75 | A913-GR.50 |
| W624 | 2 | 350S162-43 | 2'-0 1/2" | 4.64 | A913-GR.50 |
| W625 | 2 | 350S162-43 | 2'-0 3/16" | 4.59 | A913-GR.50 |
| W626 | 2 | 350S162-43 | 1'-11 15/16" | 4.53 | A913-GR.50 |
| W627 | 2 | 350S162-43 | 1'-11 5/8" | 4.48 | A913-GR.50 |
| W628 | 2 | 350S162-43 | 1'-11 5/16" | 4.42 | A913-GR.50 |
| W629 | 2 | 350S162-43 | 1'-11 1/16" | 4.37 | A913-GR.50 |
| W630 | 2 | 350S162-43 | 1'-10 1/4" | 4.22 | A913-GR.50 |
| | | TOTAL WEIGHT THIS DRAWING | | 236 | |

FRONT VIEW

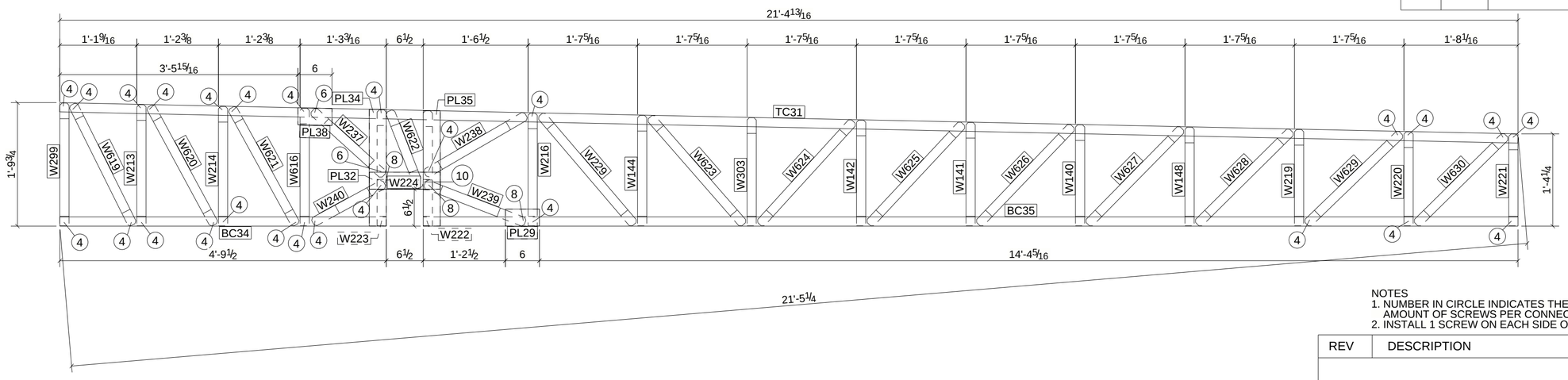


NOTES
1. NUMBER IN CIRCLE INDICATES THE TOTAL AMOUNT OF SCREWS PER CONNECTION ON BOTH SIDES.
2. INSTALL 1 SCREW ON EACH SIDE OF TRUSS UNLESS NOTED OTHERWISE

| REV | DESCRIPTION | DATE |
|---|---|---|
| | | |

| | | | |
|---|---|---|---|
| DESCRIPTION | | | |
| PROJECT NAME | | | |
| DRAWN BY | | JOB No. | DRG No. |
| DATE DRAWN | 08/14/2024 | | TR22 |

Tekla structures

# BILL OF MATERIAL

| MARK | QTY | DESCRIPTION | LENGTH | WEIGHT | REMARKS |
|---|---|---|---|---|---|
| TR23 | 2 | TRUSSES | | | SQ-2 |
| BC36 | 2 | 350S162-43 | 21'-4 13/16" | 48.65 | A913-GR.50 |
| TC32 | 2 | 350S162-43 | 21'-4 7/8" | 48.66 | A913-GR.50 |
| W88 | 2 | 350S162-43 | 1'-6 7/16" | 3.49 | A913-GR.50 |
| W89 | 2 | 350S162-43 | 1'-5 15/16" | 3.40 | A913-GR.50 |
| W104 | 2 | 350S162-43 | 1'-11 7/8" | 4.52 | A913-GR.50 |
| W115 | 2 | 350S162-43 | 1'-7 3/8" | 3.66 | A913-GR.50 |
| W138 | 2 | 350S162-43 | 1'-5 1/16" | 3.23 | A913-GR.50 |
| W139 | 2 | 350S162-43 | 1'-5 1/2" | 3.32 | A913-GR.50 |
| W153 | 2 | 350S162-43 | 2'-1 7/16" | 4.82 | A913-GR.50 |
| W157 | 2 | 350S162-43 | 2'-3" | 5.11 | A913-GR.50 |
| W183 | 2 | 350S162-43 | 1'-9 3/16" | 4.01 | A913-GR.50 |
| W192 | 2 | 350S162-43 | 2'-3 11/16" | 5.24 | A913-GR.50 |
| W211 | 2 | 350S162-43 | 2'-3 5/16" | 5.18 | A913-GR.50 |
| W220 | 2 | 350S162-43 | 1'-4 5/8" | 3.14 | A913-GR.50 |
| W221 | 2 | 350S162-43 | 1'-4 3/16" | 3.06 | A913-GR.50 |
| W225 | 2 | 350S162-43 | 1'-11 1/16" | 4.36 | A913-GR.50 |
| W231 | 2 | 350S162-43 | 2'-0 13/16" | 4.70 | A913-GR.50 |
| W242 | 2 | 350S162-43 | 1'-8 1/4" | 3.84 | A913-GR.50 |
| W243 | 2 | 350S162-43 | 1'-7 13/16" | 3.75 | A913-GR.50 |
| W249 | 2 | 350S162-43 | 2'-2 11/16" | 5.05 | A913-GR.50 |
| W250 | 2 | 350S162-43 | 2'-1 3/4" | 4.87 | A913-GR.50 |
| W299 | 2 | 350S162-43 | 1'-9 5/8" | 4.10 | A913-GR.50 |
| W312 | 2 | 350S162-43 | 2'-1 1/8" | 4.76 | A913-GR.50 |
| W458 | 2 | 350S162-43 | 2'-3 1/2" | 5.21 | A913-GR.50 |
| W616 | 2 | 350S162-43 | 1'-8 3/4" | 3.93 | A913-GR.50 |
| W632 | 2 | 350S162-43 | 2'-2 3/8" | 4.99 | A913-GR.50 |
| W718 | 2 | 350S162-43 | 1'-6 7/8" | 3.58 | A913-GR.50 |
| | | TOTAL WEIGHT THIS DRAWING | | 203 | |

FRONT VIEW

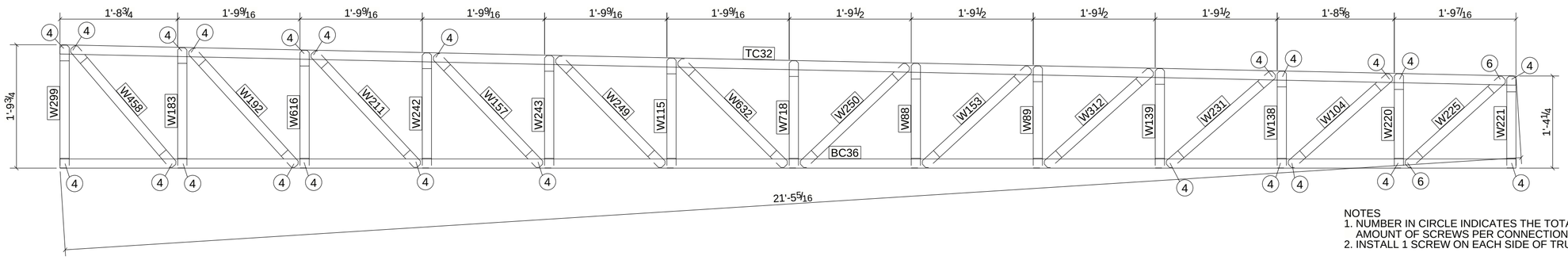


NOTES
1. NUMBER IN CIRCLE INDICATES THE TOTAL AMOUNT OF SCREWS PER CONNECTION ON BOTH SIDES.
2. INSTALL 1 SCREW ON EACH SIDE OF TRUSS UNLESS NOTED OTHERWISE

| REV | DESCRIPTION | DATE |
|---|---|---|
| | | |

| | | | |
|---|---|---|---|
| DESCRIPTION | | | |
| PROJECT NAME | | | |
| DRAWN BY | | JOB No. | DRG No. |
| DATE DRAWN | 07/16/2024 | | TR23 |

Tekla structures

# BILL OF MATERIAL

| MARK | QTY | DESCRIPTION | LENGTH | WEIGHT | REMARKS |
|---|---|---|---|---|---|
| TR24 | 3 | TRUSSES | | | SQ-2 |
| BT164 | 3 | 350S162-43 | 10'-7 5/8" | 36.27 | A913-GR.50 |
| TC33 | 3 | 350S162-43 | 10'-7 5/8" | 36.28 | A913-GR.50 |
| W87 | 3 | 350S162-43 | 1'-6 7/8" | 5.36 | A913-GR.50 |
| W115 | 3 | 350S162-43 | 1'-7 5/16" | 5.49 | A913-GR.50 |
| W183 | 3 | 350S162-43 | 1'-9 3/16" | 6.02 | A913-GR.50 |
| W195 | 3 | 350S162-43 | 2'-2 1/2" | 7.52 | A913-GR.50 |
| W196 | 3 | 350S162-43 | 2'-2 1/8" | 7.43 | A913-GR.50 |
| W197 | 3 | 350S162-43 | 2'-1 5/16" | 7.20 | A913-GR.50 |
| W201 | 3 | 350S162-43 | 1'-8 1/4" | 5.75 | A913-GR.50 |
| W243 | 3 | 350S162-43 | 1'-7 3/4" | 5.62 | A913-GR.50 |
| W285 | 3 | 350S162-43 | 2'-3 7/16" | 7.80 | A913-GR.50 |
| W299 | 3 | 350S162-43 | 1'-9 5/8" | 6.15 | A913-GR.50 |
| W306 | 3 | 350S162-43 | 2'-3 1/8" | 7.70 | A913-GR.50 |
| W616 | 3 | 350S162-43 | 1'-8 11/16" | 5.89 | A913-GR.50 |
| W633 | 3 | 350S162-43 | 2'-3 5/16" | 7.76 | A913-GR.50 |
| | | TOTAL WEIGHT THIS DRAWING | | 158 | |

FRONT VIEW

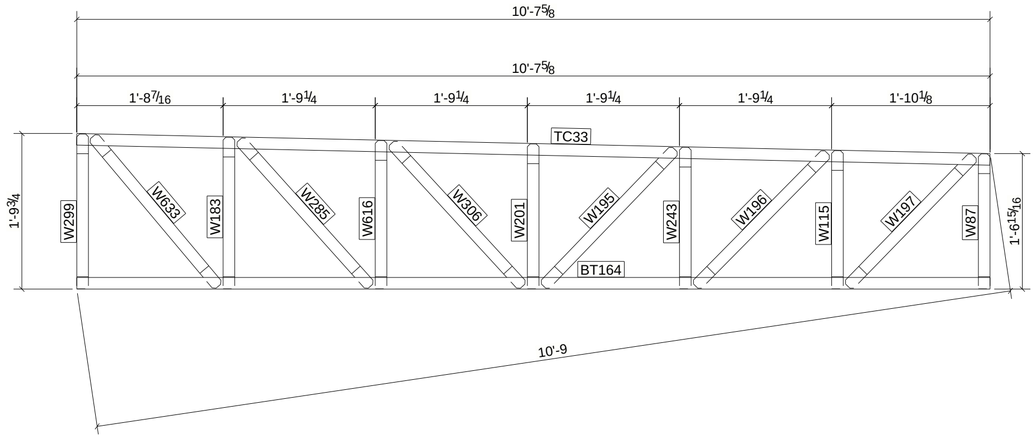


NOTES
1. NUMBER IN CIRCLE INDICATES THE TOTAL AMOUNT OF SCREWS PER CONNECTION ON BOTH SIDES.
2. INSTALL 1 SCREW ON EACH SIDE OF TRUSS UNLESS NOTED OTHERWISE

| REV | DESCRIPTION | DATE |
|---|---|---|
| | | |

| | | | |
|---|---|---|---|
| DESCRIPTION | | | |
| PROJECT NAME | | | |
| DRAWN BY | | JOB No. | DRG No. |
| DATE DRAWN | 07/16/2024 | | TR24 |

Tekla structures

# BILL OF MATERIAL

| MARK | QTY | DESCRIPTION | LENGTH | WEIGHT | REMARKS |
|---|---|---|---|---|---|
| TR25 | 1 | TRUSS | | | SQ-2 |
| BC28 | 1 | 350S162-43 | 6'-11 1/4" | 7.89 | A913-GR.50 |
| TC27 | 1 | 350S162-43 | 6'-11 1/4" | 7.89 | A913-GR.50 |
| W8 | 2 | 350S162-43 | 2'-4 1/16" | 5.31 | A913-GR.50 |
| W164 | 1 | 350S162-43 | 1'-8 5/8" | 1.95 | A913-GR.50 |
| W166 | 1 | 350S162-43 | 2'-2 1/16" | 2.47 | A913-GR.50 |
| W488 | 5 | 350S162-43 | 1'-7" | 8.99 | A913-GR.50 |
| | | TOTAL WEIGHT THIS DRAWING | | 34 | |

FRONT VIEW

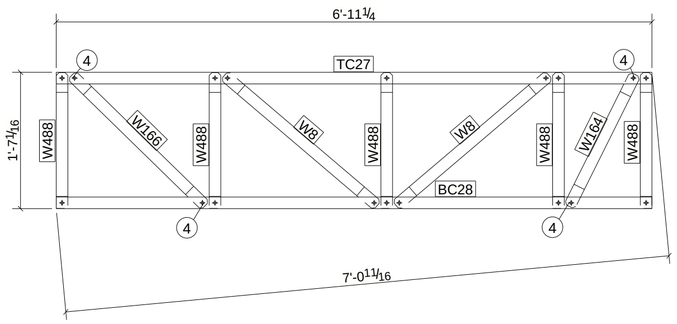


NOTES
1. NUMBER IN CIRCLE INDICATES THE TOTAL
   AMOUNT OF SCREWS PER CONNECTION ON BOTH SIDES.
2. INSTALL 1 SCREW ON EACH SIDE OF TRUSS UNLESS NOTED OTHERWISE

| REV | DESCRIPTION | DATE |
|---|---|---|
| | | |

| | | | |
|---|---|---|---|
| DESCRIPTION | | | |
| PROJECT NAME | | | |
| DRAWN BY | | JOB No. | DRG No. |
| DATE DRAWN | 07/16/2024 | | TR25 |

Tekla structures

# BILL OF MATERIAL

| MARK | QTY | DESCRIPTION | LENGTH | WEIGHT | REMARKS |
|---|---|---|---|---|---|
| TR26 | 1 | TRUSS | | | SQ-2 |
| BC37 | 1 | 350S162-43 | 6'-11 3/16" | 7.88 | A913-GR.50 |
| TC34 | 1 | 350S162-43 | 6'-11 3/16" | 7.88 | A913-GR.50 |
| W153 | 1 | 350S162-43 | 2'-1 7/16" | 2.41 | A913-GR.50 |
| W156 | 1 | 350S162-43 | 2'-2 3/4" | 2.53 | A913-GR.50 |
| W219 | 5 | 350S162-43 | 1'-5" | 8.04 | A913-GR.50 |
| W257 | 1 | 350S162-43 | 2'-2 15/16" | 2.55 | A913-GR.50 |
| W258 | 1 | 350S162-43 | 1'-6 7/16" | 1.75 | A913-GR.50 |
| | | TOTAL WEIGHT THIS DRAWING | | 33 | |

FRONT VIEW

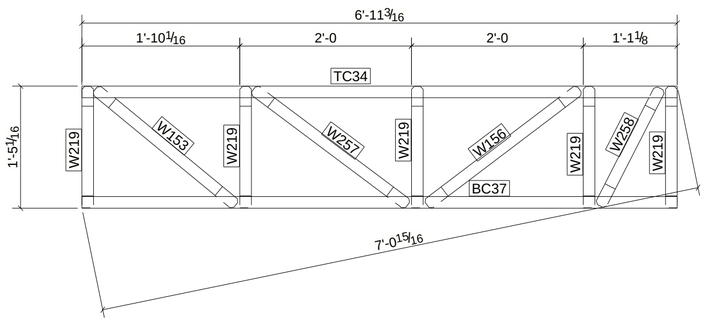


NOTES
1. NUMBER IN CIRCLE INDICATES THE TOTAL
   AMOUNT OF SCREWS PER CONNECTION ON BOTH SIDES.
2. INSTALL 1 SCREW ON EACH SIDE OF TRUSS UNLESS NOTED OTHERWISE

| REV | DESCRIPTION | DATE |
|---|---|---|
| | | |

| | | | |
|---|---|---|---|
| DESCRIPTION | | | |
| PROJECT NAME | | | |
| DRAWN BY | | JOB No. | DRG No. |
| DATE DRAWN | 07/16/2024 | | TR26 |

Tekla structures

# BILL OF MATERIAL

| MARK | QTY | DESCRIPTION | LENGTH | WEIGHT | REMARKS |
|---|---|---|---|---|---|
| TR27 | 3 | TRUSSES | | | SQ-2 |
| BT165 | 3 | 350S162-43 | 3'-3 1/2" | 11.22 | A913-GR.50 |
| TC35 | 3 | 350S162-43 | 3'-3 1/2" | 11.23 | A913-GR.50 |
| W219 | 3 | 350S162-43 | 1'-4 15/16" | 4.82 | A913-GR.50 |
| W220 | 3 | 350S162-43 | 1'-4 9/16" | 4.71 | A913-GR.50 |
| W221 | 3 | 350S162-43 | 1'-4 3/16" | 4.60 | A913-GR.50 |
| W236 | 3 | 350S162-43 | 1'-10 13/16" | 6.49 | A913-GR.50 |
| W259 | 3 | 350S162-43 | 1'-10 3/8" | 6.35 | A913-GR.50 |
| | | TOTAL WEIGHT THIS DRAWING | | 49 | |

FRONT VIEW

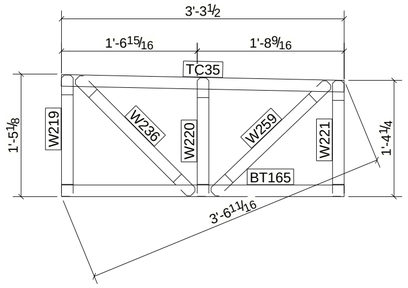


NOTES
1. NUMBER IN CIRCLE INDICATES THE TOTAL AMOUNT OF SCREWS PER CONNECTION ON BOTH SIDES.
2. INSTALL 1 SCREW ON EACH SIDE OF TRUSS UNLESS NOTED OTHERWISE

| REV | DESCRIPTION | DATE |
|---|---|---|
| | | |

| | | | |
|---|---|---|---|
| DESCRIPTION | | | |
| PROJECT NAME | | | |
| DRAWN BY | | JOB No. | DRG No. |
| DATE DRAWN | 07/16/2024 | | TR27 |

Tekla structures

# BILL OF MATERIAL

| MARK | QTY | DESCRIPTION | LENGTH | WEIGHT | REMARKS |
|---|---|---|---|---|---|
| TR28 | 1 | TRUSS | | | SQ-2 |
| BT166 | 1 | 350S162-43 | 16'-0 13/16" | 18.26 | A913-GR.50 |
| BT167 | 1 | 350S162-43 | 4'-7 1/2" | 5.26 | A913-GR.50 |
| PL29 | 2 | PL0.0430X3.0000 | 0'-6" | 0.44 | A36 |
| PL33 | 2 | PL0.0430X3.0000 | 1'-2 1/2" | 1.06 | A36 |
| PL34 | 2 | PL0.0430X3.0000 | 1'-8 9/16" | 1.50 | A36 |
| PL35 | 2 | PL0.0430X3.0000 | 1'-8 5/16" | 1.49 | A36 |
| PL38 | 2 | PL0.0430X2.9994 | 0'-6 1/16" | 0.44 | A36 |
| TC36 | 1 | 350S162-43 | 21'-4 7/8" | 24.33 | A913-GR.50 |
| W100 | 1 | 350S162-43 | 2'-1 1/8" | 2.38 | A913-GR.50 |
| W140 | 1 | 350S162-43 | 1'-5 13/16" | 1.69 | A913-GR.50 |
| W141 | 1 | 350S162-43 | 1'-6 1/4" | 1.73 | A913-GR.50 |
| W142 | 1 | 350S162-43 | 1'-6 5/8" | 1.76 | A913-GR.50 |
| W144 | 1 | 350S162-43 | 1'-7 7/16" | 1.84 | A913-GR.50 |
| W148 | 1 | 350S162-43 | 1'-5 3/8" | 1.65 | A913-GR.50 |
| W159 | 1 | 350S162-43 | 1'-10" | 2.09 | A913-GR.50 |
| W213 | 1 | 350S162-43 | 1'-9 3/8" | 2.02 | A913-GR.50 |
| W214 | 1 | 350S162-43 | 1'-9 1/16" | 1.99 | A913-GR.50 |
| W215 | 1 | 350S162-43 | 1'-8 3/4" | 1.97 | A913-GR.50 |
| W216 | 1 | 350S162-43 | 1'-7 7/8" | 1.88 | A913-GR.50 |
| W219 | 1 | 350S162-43 | 1'-5" | 1.61 | A913-GR.50 |
| W220 | 1 | 350S162-43 | 1'-4 9/16" | 1.57 | A913-GR.50 |
| W221 | 1 | 350S162-43 | 1'-4 3/16" | 1.53 | A913-GR.50 |
| W227 | 1 | 350S162-43 | 1'-11 5/16" | 2.21 | A913-GR.50 |
| W228 | 1 | 350S162-43 | 1'-2 1/4" | 1.35 | A913-GR.50 |
| W230 | 1 | 350S162-43 | 2'-0 13/16" | 2.35 | A913-GR.50 |
| W232 | 1 | 350S162-43 | 2'-0" | 2.27 | A913-GR.50 |
| W233 | 1 | 350S162-43 | 1'-11 11/16" | 2.24 | A913-GR.50 |
| W234 | 2 | 350S162-43 | 1'-11 3/8" | 4.43 | A913-GR.50 |
| W235 | 2 | 350S162-43 | 1'-11 1/8" | 4.38 | A913-GR.50 |
| W236 | 1 | 350S162-43 | 1'-10 13/16" | 2.16 | A913-GR.50 |
| W261 | 1 | 350S162-43 | 1'-8 1/4" | 1.92 | A913-GR.50 |
| W262 | 1 | 350S162-43 | 1'-8 1/2" | 1.94 | A913-GR.50 |
| W263 | 1 | 350S162-43 | 0'-11 1/2" | 1.09 | A913-GR.50 |
| W267 | 1 | 350S162-43 | 1'-4 5/16" | 1.54 | A913-GR.50 |
| W268 | 1 | 350S162-43 | 1'-7 7/8" | 1.88 | A913-GR.50 |
| W269 | 1 | 350S162-43 | 1'-7 3/8" | 1.84 | A913-GR.50 |
| W270 | 1 | 350S162-43 | 1'-2 11/16" | 1.39 | A913-GR.50 |
| W299 | 1 | 350S162-43 | 1'-9 5/8" | 2.05 | A913-GR.50 |
| W303 | 1 | 350S162-43 | 1'-7 1/16" | 1.80 | A913-GR.50 |
| W425 | 1 | 350S162-43 | 2'-0 5/16" | 2.30 | A913-GR.50 |
| p28 | 2 | PL0.0430X3.0000 | 0'-7" | 0.51 | A36 |
| | | TOTAL WEIGHT THIS DRAWING | | 118 | |

FRONT VIEW

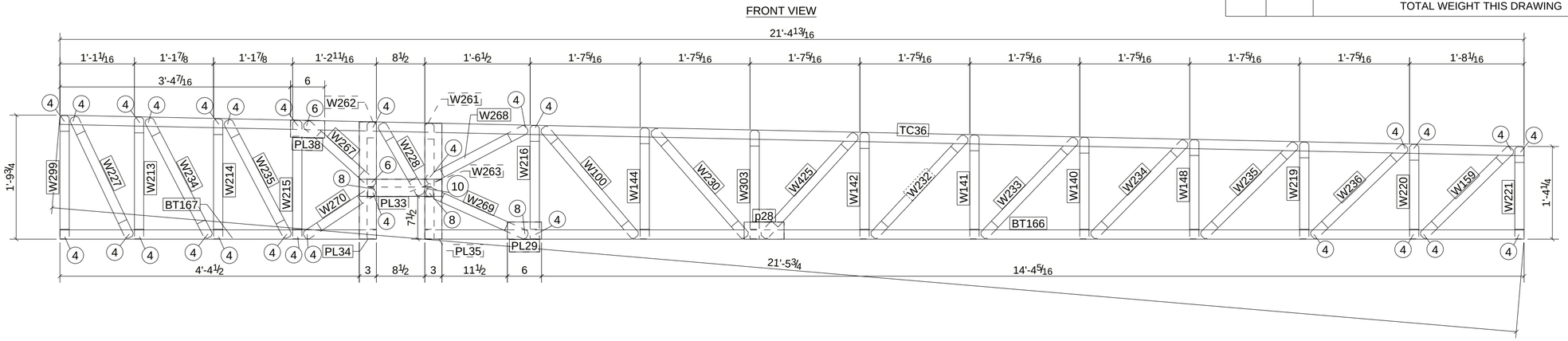


NOTES
1. NUMBER IN CIRCLE INDICATES THE TOTAL
   AMOUNT OF SCREWS PER CONNECTION ON BOTH SIDES.
2. INSTALL 1 SCREW ON EACH SIDE OF TRUSS UNLESS NOTED OTHERWISE

| REV | DESCRIPTION | DATE |
|---|---|---|
| | | |

| | | | |
|---|---|---|---|
| DESCRIPTION | | | |
| PROJECT NAME | | | |
| DRAWN BY | | JOB No. | DRG No. |
| DATE DRAWN | 07/16/2024 | | TR28 |

Tekla structures

# BILL OF MATERIAL

| MARK | QTY | DESCRIPTION | LENGTH | WEIGHT | REMARKS |
|---|---|---|---|---|---|
| TR29 | 2 | TRUSSES | | | SQ-2 |
| BT169 | 2 | 350S162-43 | 16'-0 13/16" | 36.53 | A913-GR.50 |
| BT168 | 2 | 350S162-43 | 4'-4 3/4" | 9.99 | A913-GR.50 |
| PL29 | 4 | PL0.0430X3.0000 | 0'-6" | 0.88 | A36 |
| PL33 | 4 | PL0.0430X3.0000 | 1'-2 1/2" | 2.12 | A36 |
| PL34 | 4 | PL0.0430X3.0000 | 1'-8 9/16" | 3.01 | A36 |
| PL35 | 4 | PL0.0430X3.0000 | 1'-8 5/16" | 2.97 | A36 |
| PL38 | 4 | PL0.0430X2.9994 | 0'-6 1/16" | 0.88 | A36 |
| TC48 | 2 | 350S162-43 | 21'-2 1/8" | 48.14 | A913-GR.50 |
| W86 | 2 | 350S162-43 | 1'-7 1/4" | 3.64 | A913-GR.50 |
| W88 | 2 | 350S162-43 | 1'-6 7/16" | 3.49 | A913-GR.50 |
| W89 | 2 | 350S162-43 | 1'-6" | 3.41 | A913-GR.50 |
| W138 | 2 | 350S162-43 | 1'-5 1/16" | 3.23 | A913-GR.50 |
| W145 | 2 | 350S162-43 | 1'-7 15/16" | 3.78 | A913-GR.50 |
| W168 | 2 | 350S162-43 | 1'-5 1/2" | 3.32 | A913-GR.50 |
| W215 | 2 | 350S162-43 | 1'-8 3/4" | 3.93 | A913-GR.50 |
| W221 | 2 | 350S162-43 | 1'-4 3/16" | 3.06 | A913-GR.50 |
| W225 | 2 | 350S162-43 | 1'-11 1/16" | 4.37 | A913-GR.50 |
| W228 | 2 | 350S162-43 | 1'-2 1/4" | 2.70 | A913-GR.50 |
| W241 | 2 | 350S162-43 | 1'-9 5/16" | 4.04 | A913-GR.50 |
| W307 | 2 | 350S162-43 | 1'-9" | 3.98 | A913-GR.50 |
| W324 | 2 | 350S162-43 | 1'-11" | 4.36 | A913-GR.50 |
| W372 | 2 | 350S162-43 | 1'-9 9/16" | 4.09 | A913-GR.50 |
| W444 | 2 | 350S162-43 | 1'-7 9/16" | 3.71 | A913-GR.50 |
| W459 | 2 | 350S162-43 | 1'-10 13/16" | 4.32 | A913-GR.50 |
| W473 | 2 | 350S162-43 | 1'-4 5/8" | 3.15 | A913-GR.50 |
| W476 | 2 | 350S162-43 | 1'-11 1/2" | 4.45 | A913-GR.50 |
| W477 | 2 | 350S162-43 | 1'-11 3/16" | 4.40 | A913-GR.50 |
| W478 | 2 | 350S162-43 | 2'-1 5/16" | 4.80 | A913-GR.50 |
| W479 | 2 | 350S162-43 | 1'-11 5/8" | 4.47 | A913-GR.50 |
| W480 | 2 | 350S162-43 | 1'-3 11/16" | 2.98 | A913-GR.50 |
| W481 | 2 | 350S162-43 | 1'-5 3/4" | 3.36 | A913-GR.50 |
| W483 | 2 | 350S162-43 | 1'-2 1/8" | 2.67 | A913-GR.50 |
| W634 | 2 | 350S162-43 | 1'-8 1/2" | 3.88 | A913-GR.50 |
| W635 | 2 | 350S162-43 | 1'-8 1/4" | 3.84 | A913-GR.50 |
| W636 | 2 | 350S162-43 | 0'-11 3/4" | 2.23 | A913-GR.50 |
| W637 | 2 | 350S162-43 | 1'-10 15/16" | 4.34 | A913-GR.50 |
| W638 | 2 | 350S162-43 | 2'-1 5/8" | 4.86 | A913-GR.50 |
| W639 | 2 | 350S162-43 | 2'-1 1/16" | 4.74 | A913-GR.50 |
| W640 | 2 | 350S162-43 | 2'-0 3/4" | 4.69 | A913-GR.50 |
| W641 | 2 | 350S162-43 | 2'-0 7/16" | 4.63 | A913-GR.50 |
| W642 | 2 | 350S162-43 | 1'-4 11/16" | 3.16 | A913-GR.50 |
| W718 | 2 | 350S162-43 | 1'-6 7/8" | 3.58 | A913-GR.50 |
| | | TOTAL WEIGHT THIS DRAWING | | 234 | |

FRONT VIEW

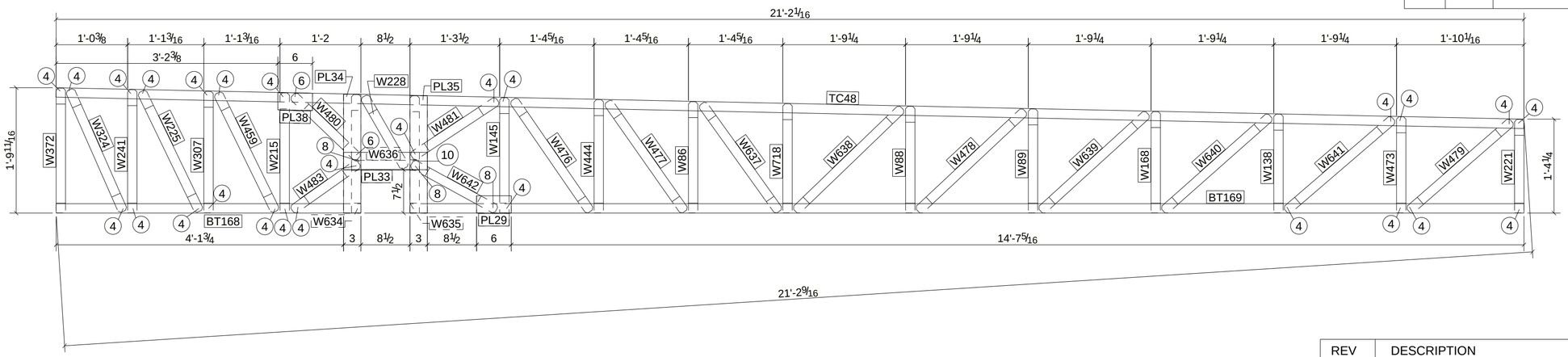


NOTES
1. NUMBER IN CIRCLE INDICATES THE TOTAL
   AMOUNT OF SCREWS PER CONNECTION ON BOTH SIDES.
2. INSTALL 1 SCREW ON EACH SIDE OF TRUSS UNLESS NOTED OTHERWISE

| REV | DESCRIPTION | DATE |
|---|---|---|
| | | |

| | | | |
|---|---|---|---|
| DESCRIPTION | | | |
| PROJECT NAME | | | |
| DRAWN BY | | JOB No. | DRG No. |
| DATE DRAWN | 07/16/2024 | | TR29 |

Tekla structures

# BILL OF MATERIAL

| MARK | QTY | DESCRIPTION | LENGTH | WEIGHT | REMARKS |
|---|---|---|---|---|---|
| TR30 | 1 | TRUSS | | | SQ-2 |
| BC57 | 1 | 350S162-43 | 8'-6 7/16" | 9.70 | A913-GR.50 |
| BC56 | 1 | 350S162-43 | 4'-4 11/16" | 4.99 | A913-GR.50 |
| BC58 | 1 | 350S162-43 | 6'-9 7/8" | 7.76 | A913-GR.50 |
| PL21 | 2 | PL0.0430X3.0000 | 0'-7" | 0.51 | A36 |
| PL29 | 4 | PL0.0430X3.0000 | 0'-6" | 0.88 | A36 |
| PL33 | 4 | PL0.0430X3.0000 | 1'-2 1/2" | 2.12 | A36 |
| PL34 | 2 | PL0.0430X3.0000 | 1'-8 9/16" | 1.50 | A36 |
| PL35 | 2 | PL0.0430X3.0000 | 1'-8 5/16" | 1.49 | A36 |
| PL36 | 2 | PL0.0430X3.0000 | 1'-6 3/16" | 1.33 | A36 |
| PL37 | 2 | PL0.0430X3.0000 | 1'-5 15/16" | 1.31 | A36 |
| PL38 | 6 | PL0.0430X2.9994 | 0'-6 1/16" | 1.32 | A36 |
| TC52 | 1 | 350S162-43 | 21'-2 1/16" | 24.06 | A913-GR.50 |
| W86 | 1 | 350S162-43 | 1'-7 1/4" | 1.82 | A913-GR.50 |
| W104 | 1 | 350S162-43 | 1'-11 13/16" | 2.26 | A913-GR.50 |
| W105 | 1 | 350S162-43 | 1'-11 9/16" | 2.23 | A913-GR.50 |
| W113 | 1 | 350S162-43 | 1'-6 1/2" | 1.75 | A913-GR.50 |
| W138 | 1 | 350S162-43 | 1'-5 1/16" | 1.61 | A913-GR.50 |
| W139 | 1 | 350S162-43 | 1'-5 1/2" | 1.65 | A913-GR.50 |
| W145 | 1 | 350S162-43 | 1'-7 15/16" | 1.89 | A913-GR.50 |
| W215 | 1 | 350S162-43 | 1'-8 3/4" | 1.97 | A913-GR.50 |
| W220 | 1 | 350S162-43 | 1'-4 9/16" | 1.57 | A913-GR.50 |
| W221 | 1 | 350S162-43 | 1'-4 3/16" | 1.53 | A913-GR.50 |
| W228 | 1 | 350S162-43 | 1'-2 1/4" | 1.35 | A913-GR.50 |
| W235 | 1 | 350S162-43 | 1'-11 1/8" | 2.19 | A913-GR.50 |
| W241 | 1 | 350S162-43 | 1'-9 5/16" | 2.02 | A913-GR.50 |
| W253 | 1 | 350S162-43 | 1'-11 1/4" | 2.20 | A913-GR.50 |
| W281 | 1 | 350S162-43 | 1'-10 7/8" | 2.17 | A913-GR.50 |
| W307 | 1 | 350S162-43 | 1'-9" | 1.99 | A913-GR.50 |
| W311 | 1 | 350S162-43 | 1'-7 1/2" | 1.85 | A913-GR.50 |
| W313 | 1 | 350S162-43 | 0'-11 3/4" | 1.11 | A913-GR.50 |
| W324 | 1 | 350S162-43 | 1'-11" | 2.18 | A913-GR.50 |
| W372 | 1 | 350S162-43 | 1'-9 9/16" | 2.04 | A913-GR.50 |
| W430 | 1 | 350S162-43 | 1'-5 7/8" | 1.69 | A913-GR.50 |
| W431 | 1 | 350S162-43 | 1'-6 1/8" | 1.72 | A913-GR.50 |
| W432 | 1 | 350S162-43 | 0'-11 3/4" | 1.11 | A913-GR.50 |
| W434 | 1 | 350S162-43 | 2'-0 3/16" | 2.29 | A913-GR.50 |
| W435 | 1 | 350S162-43 | 1'-11 15/16" | 2.27 | A913-GR.50 |
| W436 | 2 | 350S162-43 | 1'-11 1/16" | 4.37 | A913-GR.50 |
| W442 | 1 | 350S162-43 | 1'-5 11/16" | 1.68 | A913-GR.50 |
| W445 | 1 | 350S162-43 | 1'-2 1/16" | 1.33 | A913-GR.50 |
| W449 | 1 | 350S162-43 | 1'-6 11/16" | 1.77 | A913-GR.50 |
| W450 | 1 | 350S162-43 | 1'-8 3/16" | 1.91 | A913-GR.50 |
| W452 | 1 | 350S162-43 | 1'-8 11/16" | 1.96 | A913-GR.50 |
| W453 | 1 | 350S162-43 | 1'-6 7/8" | 1.79 | A913-GR.50 |
| W455 | 1 | 350S162-43 | 1'-0 1/4" | 1.16 | A913-GR.50 |
| W474 | 1 | 350S162-43 | 1'-8 1/2" | 1.94 | A913-GR.50 |
| W475 | 1 | 350S162-43 | 1'-8 1/4" | 1.92 | A913-GR.50 |
| W480 | 1 | 350S162-43 | 1'-3 11/16" | 1.49 | A913-GR.50 |
| W482 | 1 | 350S162-43 | 1'-4 7/8" | 1.60 | A913-GR.50 |
| W718 | 1 | 350S162-43 | 1'-6 7/8" | 1.79 | A913-GR.50 |
| | | TOTAL WEIGHT THIS DRAWING | | 128 | |

FRONT VIEW

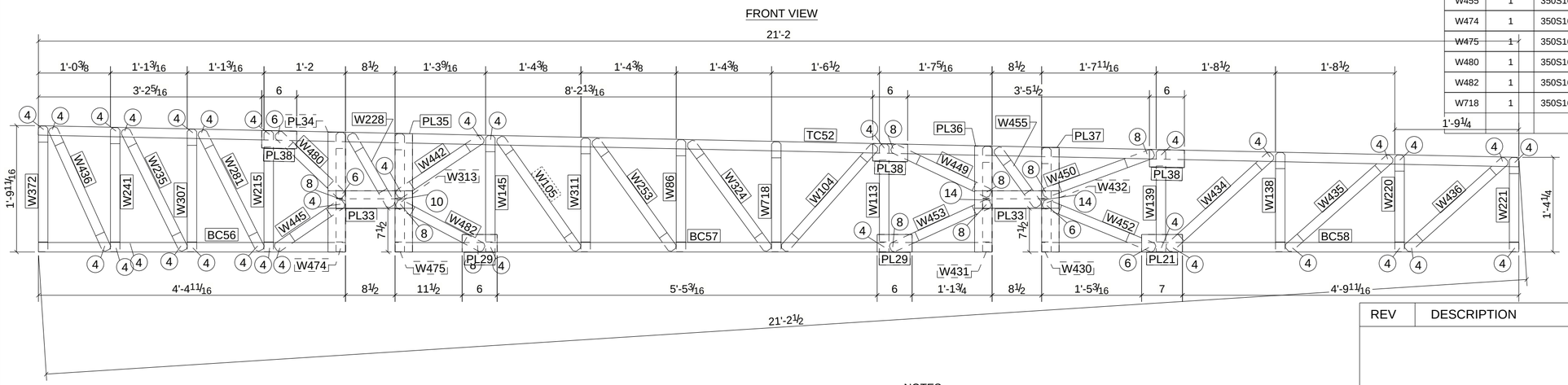


NOTES
1. NUMBER IN CIRCLE INDICATES THE TOTAL
   AMOUNT OF SCREWS PER CONNECTION ON BOTH SIDES.
2. INSTALL 1 SCREW ON EACH SIDE OF TRUSS UNLESS NOTED OTHERWISE

| REV | DESCRIPTION | DATE |
|---|---|---|
| | | |

| | | | |
|---|---|---|---|
| DESCRIPTION | | | |
| PROJECT NAME | | | |
| DRAWN BY | | JOB No. | DRG No. |
| DATE DRAWN | 07/16/2024 | | TR30 |

Tekla structures

# BILL OF MATERIAL

| MARK | QTY | DESCRIPTION | LENGTH | WEIGHT | REMARKS |
|---|---|---|---|---|---|
| TR31 | 4 | TRUSSES | | | SQ-2 |
| BC59 | 4 | 350S162-43 | 13'-7 9/16" | 61.98 | A913-GR.50 |
| BC60 | 4 | 350S162-43 | 6'-9 15/16" | 31.04 | A913-GR.50 |
| PL20 | 4 | PL0.0430X3.0000 | 1'-2 3/8" | 2.10 | A36 |
| PL21 | 8 | PL0.0430X3.0000 | 0'-7" | 2.05 | A36 |
| PL29 | 8 | PL0.0430X3.0000 | 0'-6" | 1.76 | A36 |
| PL33 | 4 | PL0.0430X3.0000 | 1'-2 1/2" | 2.12 | A36 |
| PL36 | 8 | PL0.0430X3.0000 | 1'-6 3/16" | 5.32 | A36 |
| PL37 | 8 | PL0.0430X3.0000 | 1'-5 15/16" | 5.25 | A36 |
| PL38 | 16 | PL0.0430X2.9994 | 0'-6 1/16" | 3.51 | A36 |
| TC53 | 4 | 350S162-43 | 21'-2 1/16" | 96.26 | A913-GR.50 |
| W95 | 4 | 350S162-43 | 2'-2 3/16" | 9.93 | A913-GR.50 |
| W113 | 4 | 350S162-43 | 1'-6 1/2" | 7.02 | A913-GR.50 |
| W138 | 4 | 350S162-43 | 1'-5 1/16" | 6.45 | A913-GR.50 |
| W139 | 4 | 350S162-43 | 1'-5 1/2" | 6.62 | A913-GR.50 |
| W155 | 4 | 350S162-43 | 2'-2 7/8" | 10.18 | A913-GR.50 |
| W156 | 4 | 350S162-43 | 2'-2 11/16" | 10.12 | A913-GR.50 |
| W183 | 4 | 350S162-43 | 1'-9 1/8" | 8.02 | A913-GR.50 |
| W216 | 4 | 350S162-43 | 1'-7 13/16" | 7.52 | A913-GR.50 |
| W220 | 4 | 350S162-43 | 1'-4 9/16" | 6.29 | A913-GR.50 |
| W221 | 4 | 350S162-43 | 1'-4 3/16" | 6.13 | A913-GR.50 |
| W232 | 4 | 350S162-43 | 2'-0" | 9.10 | A913-GR.50 |
| W242 | 4 | 350S162-43 | 1'-8 1/4" | 7.68 | A913-GR.50 |
| W274 | 4 | 350S162-43 | 1'-7 3/8" | 7.35 | A913-GR.50 |
| W281 | 4 | 350S162-43 | 1'-10 15/16" | 8.68 | A913-GR.50 |
| W295 | 4 | 350S162-43 | 2'-1 9/16" | 9.69 | A913-GR.50 |
| W325 | 4 | 350S162-43 | 0'-11 5/8" | 4.40 | A913-GR.50 |
| W329 | 4 | 350S162-43 | 2'-2 9/16" | 10.05 | A913-GR.50 |
| W330 | 4 | 350S162-43 | 2'-1 7/8" | 9.81 | A913-GR.50 |
| W331 | 4 | 350S162-43 | 1'-11 3/4" | 8.99 | A913-GR.50 |
| W335 | 4 | 350S162-43 | 1'-8 7/16" | 7.75 | A913-GR.50 |
| W372 | 4 | 350S162-43 | 1'-9 9/16" | 8.17 | A913-GR.50 |
| W488 | 4 | 350S162-43 | 1'-6 15/16" | 7.19 | A913-GR.50 |
| W517 | 4 | 350S162-43 | 1'-5 7/8" | 6.78 | A913-GR.50 |
| W518 | 4 | 350S162-43 | 1'-6 1/8" | 6.86 | A913-GR.50 |
| W520 | 4 | 350S162-43 | 2'-1" | 9.48 | A913-GR.50 |
| W522 | 4 | 350S162-43 | 1'-8 9/16" | 7.79 | A913-GR.50 |
| W523 | 4 | 350S162-43 | 1'-8 1/4" | 7.67 | A913-GR.50 |
| W524 | 4 | 350S162-43 | 1'-8 7/16" | 7.75 | A913-GR.50 |
| W616 | 4 | 350S162-43 | 1'-8 11/16" | 7.85 | A913-GR.50 |
| W719 | 4 | 350S162-43 | 1'-0 1/8" | 4.60 | A913-GR.50 |
| | | TOTAL WEIGHT THIS DRAWING | | 447 | |

FRONT VIEW

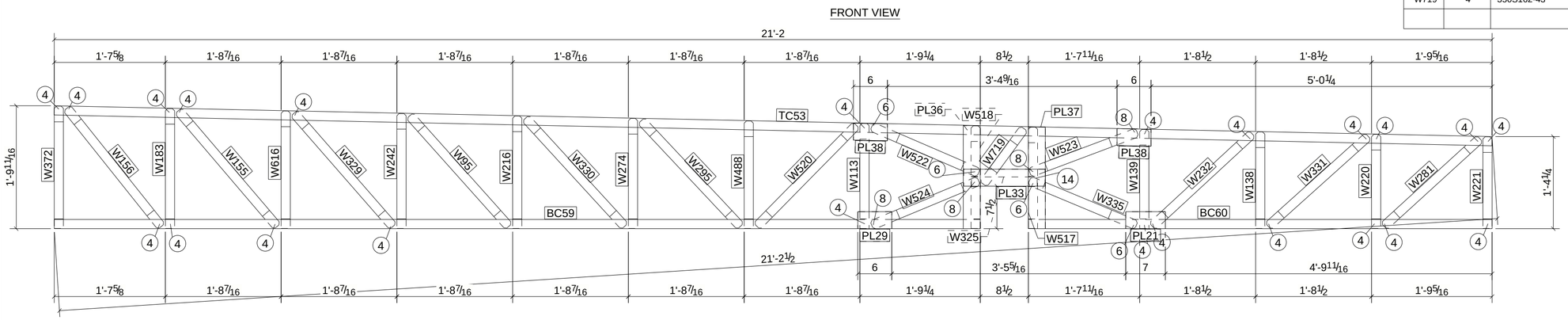


NOTES
1. NUMBER IN CIRCLE INDICATES THE TOTAL AMOUNT OF SCREWS PER CONNECTION ON BOTH SIDES.
2. INSTALL 1 SCREW ON EACH SIDE OF TRUSS UNLESS NOTED OTHERWISE

| REV | DESCRIPTION | DATE |
|---|---|---|
| | | |

| | | | |
|---|---|---|---|
| DESCRIPTION | | | |
| PROJECT NAME | | | |
| DRAWN BY | | JOB No. | DRG No. |
| DATE DRAWN | 07/30/2024 | | TR31 |

Tekla structures

# BILL OF MATERIAL

| MARK | QTY | DESCRIPTION | LENGTH | WEIGHT | REMARKS |
|---|---|---|---|---|---|
| TR32 | 1 | TRUSS | | | SQ-2 |
| BC80 | 1 | 350S162-43 | 1'-8 1/2" | 1.94 | A913-GR.50 |
| P58 | 1 | 350S162-43 | 0'-3 3/16" | 0.30 | A913-GR.50 |
| P64 | 1 | 350S162-43 | 0'-4 15/16" | 0.47 | A913-GR.50 |
| TC42 | 1 | 350S162-43 | 1'-6 13/16" | 1.78 | A913-GR.50 |
| W107 | 1 | 350S162-43 | 1'-4" | 1.51 | A913-GR.50 |
| W374 | 1 | 350S162-43 | 1'-0 7/16" | 1.18 | A913-GR.50 |
| W461 | 1 | 350S162-43 | 1'-10 1/4" | 2.11 | A913-GR.50 |
| | | TOTAL WEIGHT THIS DRAWING | | 9 | |

FRONT VIEW

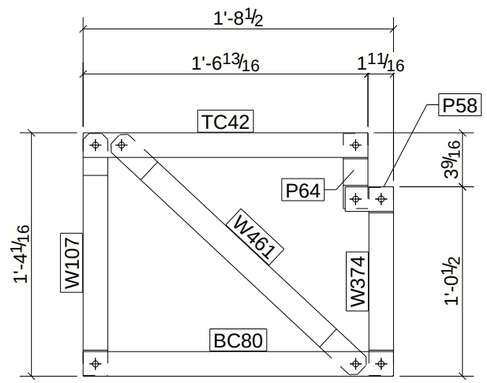


| REV | DESCRIPTION | DATE |
|---|---|---|
| | | |

| | | | |
|---|---|---|---|
| DESCRIPTION | STANDARD | | |
| PROJECT NAME | | | |
| DRAWN BY | | JOB No. | DRG No. |
| DATE DRAWN | | | TR32 |

Tekla structures

# BILL OF MATERIAL

| MARK | QTY | DESCRIPTION | LENGTH | WEIGHT | REMARKS |
|---|---|---|---|---|---|
| TR33 | 1 | TRUSS | | | SQ-2 |
| BC67 | 1 | 550S162-43 | 11'-5" | 16.47 | A913-GR.50 |
| PL21 | 4 | PL0.0430X3.0000 | 0'-7" | 1.02 | A36 |
| PL29 | 26 | PL0.0430X3.0000 | 0'-6" | 5.71 | A36 |
| PL39 | 4 | PL0.0430X3.0000 | 1'-9 11/16" | 3.17 | A36 |
| TC60 | 1 | 550S162-43 | 11'-5" | 16.47 | A913-GR.50 |
| W529 | 9 | 550S162-43 | 1'-9 3/4" | 23.51 | A913-GR.50 |
| W530 | 2 | 550S162-43 | 1'-9 3/4" | 5.23 | A913-GR.50 |
| W531 | 1 | 550S162-43 | 2'-2" | 3.13 | A913-GR.50 |
| W532 | 1 | 550S162-43 | 2'-0 1/4" | 2.91 | A913-GR.50 |
| W533 | 5 | 550S162-43 | 1'-11 3/16" | 13.94 | A913-GR.50 |
| W534 | 1 | 550S162-43 | 1'-11 1/2" | 2.82 | A913-GR.50 |
| W535 | 1 | 550S162-43 | 0'-11 11/16" | 1.41 | A913-GR.50 |
| W536 | 1 | 550S162-43 | 0'-11 13/16" | 1.42 | A913-GR.50 |
| W537 | 2 | 550S162-43 | 1'-5 7/8" | 4.29 | A913-GR.50 |
| W538 | 2 | 550S162-43 | 1'-0 13/16" | 3.09 | A913-GR.50 |
| | | TOTAL WEIGHT THIS DRAWING | | 105 | |

FRONT VIEW

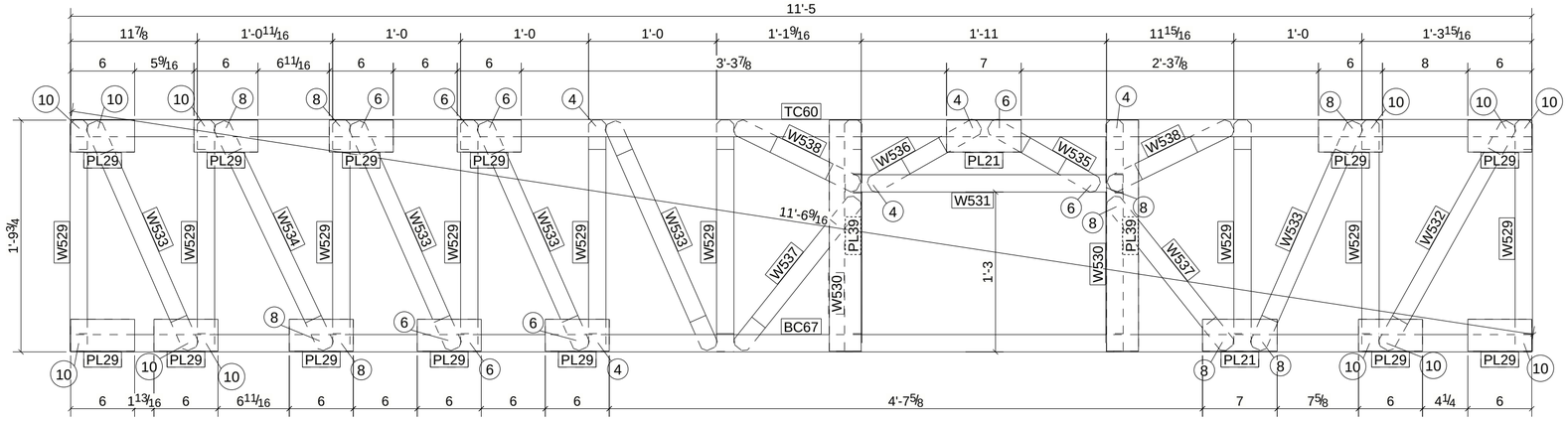


NOTES
1. NUMBER IN CIRCLE INDICATES THE TOTAL
   AMOUNT OF SCREWS PER CONNECTION ON BOTH SIDES.
2. INSTALL 1 SCREW ON EACH SIDE OF TRUSS UNLESS NOTED OTHERWISE

| REV | DESCRIPTION | DATE |
|---|---|---|
| | | |

| | | | |
|---|---|---|---|
| DESCRIPTION | | | |
| PROJECT NAME | | | |
| DRAWN BY | | JOB No. | DRG No. |
| DATE DRAWN | 07/18/2024 | | TR33 |

Tekla structures

# BILL OF MATERIAL

| MARK | QTY | DESCRIPTION | LENGTH | WEIGHT | REMARKS |
|---|---|---|---|---|---|
| TR34 | 3 | TRUSSES | | | SQ-2 |
| BT25 | 3 | 350S162-43 | 23'-10 1/2" | 81.41 | A913-GR.50 |
| BT134 | 3 | 350S162-43 | 0'-9" | 2.56 | A913-GR.50 |
| PL29 | 72 | PL0.0430X3.0000 | 0'-6" | 15.81 | A36 |
| PL40 | 6 | PL0.0430X3.0000 | 1'-1" | 2.85 | A36 |
| TT148 | 3 | 350S162-43 | 24'-6 1/16" | 83.56 | A913-GR.50 |
| W76 | 3 | 350S162-43 | 1'-9 1/2" | 6.10 | A913-GR.50 |
| W77 | 3 | 350S162-43 | 1'-8 7/8" | 5.93 | A913-GR.50 |
| W92 | 3 | 350S162-43 | 1'-4 3/4" | 4.76 | A913-GR.50 |
| W93 | 3 | 350S162-43 | 1'-4 5/16" | 4.64 | A913-GR.50 |
| W105 | 3 | 350S162-43 | 1'-11 9/16" | 6.70 | A913-GR.50 |
| W106 | 3 | 350S162-43 | 1'-10 3/4" | 6.47 | A913-GR.50 |
| W114 | 3 | 350S162-43 | 1'-6 7/8" | 5.37 | A913-GR.50 |
| W139 | 3 | 350S162-43 | 1'-5 1/2" | 4.97 | A913-GR.50 |
| W140 | 3 | 350S162-43 | 1'-5 13/16" | 5.07 | A913-GR.50 |
| W141 | 3 | 350S162-43 | 1'-6 3/16" | 5.17 | A913-GR.50 |
| W146 | 3 | 350S162-43 | 1'-8 3/8" | 5.79 | A913-GR.50 |
| W158 | 3 | 350S162-43 | 1'-9 3/4" | 6.18 | A913-GR.50 |
| W159 | 3 | 350S162-43 | 1'-10" | 6.26 | A913-GR.50 |
| W191 | 3 | 350S162-43 | 2'-4" | 7.96 | A913-GR.50 |
| W213 | 3 | 350S162-43 | 1'-9 3/8" | 6.08 | A913-GR.50 |
| W216 | 3 | 350S162-43 | 1'-7 7/8" | 5.65 | A913-GR.50 |
| W244 | 3 | 350S162-43 | 1'-3 15/16" | 4.52 | A913-GR.50 |
| W271 | 3 | 350S162-43 | 1'-1 9/16" | 3.86 | A913-GR.50 |
| W272 | 3 | 350S162-43 | 1'-9 7/8" | 6.21 | A913-GR.50 |
| W274 | 3 | 350S162-43 | 1'-7 3/8" | 5.51 | A913-GR.50 |
| W277 | 3 | 350S162-43 | 2'-5 1/8" | 8.28 | A913-GR.50 |
| W278 | 3 | 350S162-43 | 2'-5 5/16" | 8.33 | A913-GR.50 |
| W279 | 3 | 350S162-43 | 2'-4 5/8" | 8.14 | A913-GR.50 |
| W280 | 3 | 350S162-43 | 2'-4 5/16" | 8.05 | A913-GR.50 |
| W281 | 3 | 350S162-43 | 1'-10 13/16" | 6.49 | A913-GR.50 |
| W296 | 3 | 350S162-43 | 1'-10 5/16" | 6.33 | A913-GR.50 |
| W389 | 3 | 350S162-43 | 2'-5" | 8.24 | A913-GR.50 |
| W406 | 3 | 350S162-43 | 1'-10 9/16" | 6.41 | A913-GR.50 |
| W720 | 3 | 350S162-43 | 1'-6 9/16" | 5.27 | A913-GR.50 |
| W721 | 3 | 350S162-43 | 1'-5 1/8" | 4.86 | A913-GR.50 |
| W722 | 3 | 350S162-43 | 1'-1 3/4" | 3.91 | A913-GR.50 |
| | | TOTAL WEIGHT THIS DRAWING | | 374 | |

FRONT VIEW

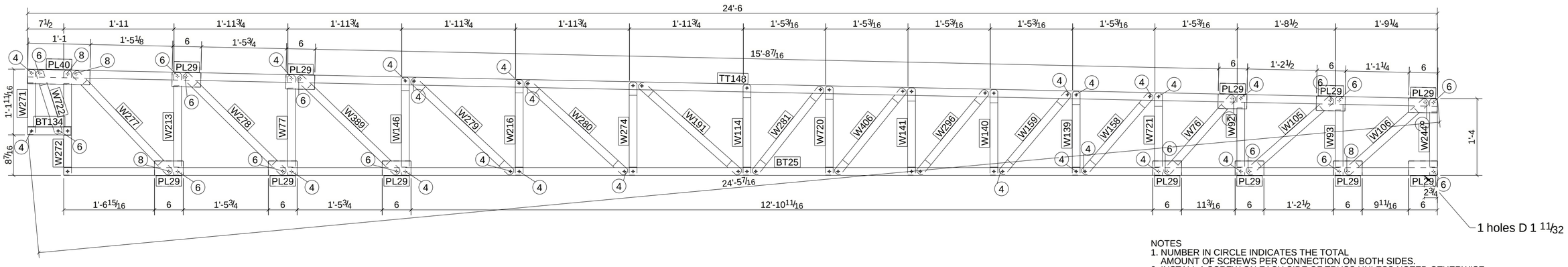


NOTES
1. NUMBER IN CIRCLE INDICATES THE TOTAL AMOUNT OF SCREWS PER CONNECTION ON BOTH SIDES.
2. INSTALL 1 SCREW ON EACH SIDE OF TRUSS UNLESS NOTED OTHERWISE

| REV | DESCRIPTION | DATE |
|---|---|---|
| | | |

| | | | |
|---|---|---|---|
| DESCRIPTION | | | |
| PROJECT NAME | | | |
| DRAWN BY | | JOB No. | DRG No. |
| DATE DRAWN | 07/19/2024 | | TR34 |

Tekla structures

# BILL OF MATERIAL

| MARK | QTY | DESCRIPTION | LENGTH | WEIGHT | REMARKS |
|---|---|---|---|---|---|
| TR35 | 2 | TRUSSES | | | SQ-2 |
| BC38 | 2 | 350S162-43 | 23'-10 1/2" | 54.28 | A913-GR.50 |
| BC39 | 2 | 350S162-43 | 0'-9" | 1.71 | A913-GR.50 |
| PL29 | 4 | PL0.0430X3.0000 | 0'-6" | 0.88 | A36 |
| TC37 | 2 | 350S162-43 | 24'-6 1/16" | 55.71 | A913-GR.50 |
| W77 | 2 | 350S162-43 | 1'-8 7/8" | 3.96 | A913-GR.50 |
| W113 | 2 | 350S162-43 | 1'-6 1/2" | 3.51 | A913-GR.50 |
| W114 | 2 | 350S162-43 | 1'-6 7/8" | 3.58 | A913-GR.50 |
| W146 | 2 | 350S162-43 | 1'-8 3/8" | 3.86 | A913-GR.50 |
| W148 | 2 | 350S162-43 | 1'-5 3/8" | 3.29 | A913-GR.50 |
| W185 | 2 | 350S162-43 | 1'-6 1/8" | 3.44 | A913-GR.50 |
| W191 | 2 | 350S162-43 | 2'-4" | 5.30 | A913-GR.50 |
| W213 | 2 | 350S162-43 | 1'-9 3/8" | 4.05 | A913-GR.50 |
| W216 | 2 | 350S162-43 | 1'-7 7/8" | 3.77 | A913-GR.50 |
| W226 | 2 | 350S162-43 | 1'-11 7/16" | 4.44 | A913-GR.50 |
| W244 | 2 | 350S162-43 | 1'-3 15/16" | 3.02 | A913-GR.50 |
| W259 | 2 | 350S162-43 | 1'-10 5/16" | 4.23 | A913-GR.50 |
| W264 | 2 | 350S162-43 | 1'-11 3/16" | 4.39 | A913-GR.50 |
| W271 | 2 | 350S162-43 | 1'-1 9/16" | 2.57 | A913-GR.50 |
| W272 | 2 | 350S162-43 | 1'-9 7/8" | 4.14 | A913-GR.50 |
| W274 | 2 | 350S162-43 | 1'-7 3/8" | 3.68 | A913-GR.50 |
| W275 | 2 | 350S162-43 | 1'-4 5/8" | 3.15 | A913-GR.50 |
| W276 | 2 | 350S162-43 | 1'-4 1/4" | 3.08 | A913-GR.50 |
| W277 | 2 | 350S162-43 | 2'-5 1/8" | 5.52 | A913-GR.50 |
| W278 | 2 | 350S162-43 | 2'-5 5/16" | 5.55 | A913-GR.50 |
| W279 | 2 | 350S162-43 | 2'-4 5/8" | 5.43 | A913-GR.50 |
| W280 | 2 | 350S162-43 | 2'-4 5/16" | 5.37 | A913-GR.50 |
| W281 | 2 | 350S162-43 | 1'-10 7/8" | 4.34 | A913-GR.50 |
| W283 | 2 | 350S162-43 | 1'-1 13/16" | 2.62 | A913-GR.50 |
| W284 | 4 | 350S162-43 | 0'-10 1/4" | 3.89 | A913-GR.50 |
| W286 | 2 | 350S162-43 | 1'-3 7/16" | 2.92 | A913-GR.50 |
| W287 | 2 | 350S162-43 | 1'-5 1/2" | 3.32 | A913-GR.50 |
| W288 | 2 | 350S162-43 | 1'-4 11/16" | 3.16 | A913-GR.50 |
| W289 | 2 | 350S162-43 | 1'-6 7/16" | 3.49 | A913-GR.50 |
| W383 | 2 | 350S162-43 | 1'-5 3/4" | 3.37 | A913-GR.50 |
| W384 | 2 | 350S162-43 | 1'-5" | 3.22 | A913-GR.50 |
| W389 | 2 | 350S162-43 | 2'-5" | 5.49 | A913-GR.50 |
| W406 | 2 | 350S162-43 | 1'-10 5/8" | 4.28 | A913-GR.50 |
| W515 | 2 | 350S162-43 | 1'-4 1/4" | 3.08 | A913-GR.50 |
| W516 | 2 | 350S162-43 | 1'-4 5/8" | 3.15 | A913-GR.50 |
| | | TOTAL WEIGHT THIS DRAWING | | 248 | |

FRONT VIEW

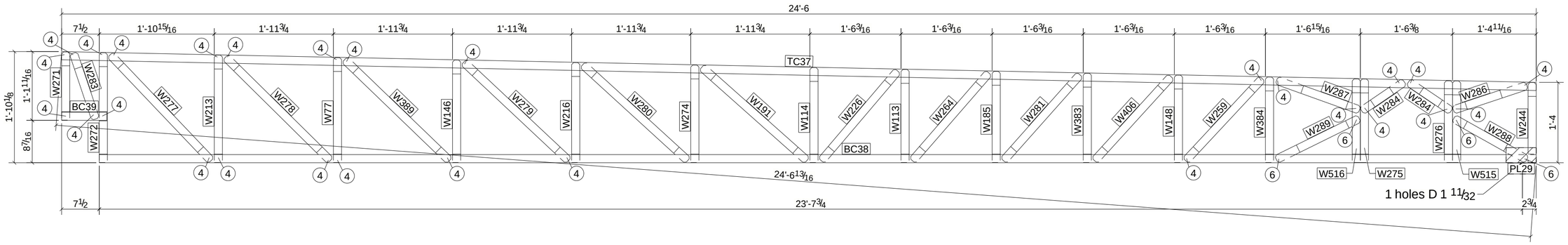


NOTES
1. NUMBER IN CIRCLE INDICATES THE TOTAL AMOUNT OF SCREWS PER CONNECTION ON BOTH SIDES.
2. INSTALL 1 SCREW ON EACH SIDE OF TRUSS UNLESS NOTED OTHERWISE

| REV | DESCRIPTION | DATE |
|---|---|---|
| | | |

| | | | |
|---|---|---|---|
| DESCRIPTION | | | |
| PROJECT NAME | | | |
| DRAWN BY | | JOB No. | DRG No. |
| DATE DRAWN | 07/19/2024 | | TR35 |

Tekla structures

# BILL OF MATERIAL

| MARK | QTY | DESCRIPTION | LENGTH | WEIGHT | REMARKS |
|---|---|---|---|---|---|
| TR36 | 4 | TRUSSES | | | SQ-2 |
| BC40 | 4 | 350S162-43 | 24'-11 3/4" | 113.57 | A913-GR.50 |
| TC38 | 4 | 350S162-43 | 24'-11 13*** | 113.60 | A913-GR.50 |
| W77 | 4 | 350S162-43 | 1'-8 7/8" | 7.91 | A913-GR.50 |
| W83 | 4 | 350S162-43 | 1'-8 1/2" | 7.77 | A913-GR.50 |
| W86 | 4 | 350S162-43 | 1'-7 1/4" | 7.30 | A913-GR.50 |
| W87 | 4 | 350S162-43 | 1'-6 13/16" | 7.14 | A913-GR.50 |
| W96 | 4 | 350S162-43 | 2'-2 3/8" | 10.00 | A913-GR.50 |
| W99 | 4 | 350S162-43 | 2'-1 9/16" | 9.68 | A913-GR.50 |
| W109 | 4 | 350S162-43 | 1'-4 7/8" | 6.40 | A913-GR.50 |
| W148 | 4 | 350S162-43 | 1'-5 3/8" | 6.58 | A913-GR.50 |
| W157 | 4 | 350S162-43 | 2'-3 1/16" | 10.26 | A913-GR.50 |
| W194 | 4 | 350S162-43 | 2'-2 13/16" | 10.15 | A913-GR.50 |
| W210 | 4 | 350S162-43 | 2'-3 11/16" | 10.48 | A913-GR.50 |
| W211 | 4 | 350S162-43 | 2'-3 3/8" | 10.37 | A913-GR.50 |
| W241 | 4 | 350S162-43 | 1'-9 1/4" | 8.06 | A913-GR.50 |
| W244 | 4 | 350S162-43 | 1'-3 15/16" | 6.03 | A913-GR.50 |
| W250 | 8 | 350S162-43 | 2'-1 11/16" | 19.49 | A913-GR.50 |
| W265 | 4 | 350S162-43 | 1'-4 3/8" | 6.21 | A913-GR.50 |
| W290 | 4 | 350S162-43 | 1'-10" | 8.33 | A913-GR.50 |
| W292 | 4 | 350S162-43 | 1'-6 3/8" | 6.95 | A913-GR.50 |
| W293 | 4 | 350S162-43 | 1'-5 7/8" | 6.77 | A913-GR.50 |
| W294 | 4 | 350S162-43 | 1'-7 11/16" | 7.47 | A913-GR.50 |
| W297 | 8 | 350S162-43 | 2'-2" | 19.72 | A913-GR.50 |
| W298 | 4 | 350S162-43 | 1'-8 1/8" | 7.62 | A913-GR.50 |
| W299 | 4 | 350S162-43 | 1'-9 5/8" | 8.20 | A913-GR.50 |
| W330 | 4 | 350S162-43 | 2'-1 7/8" | 9.81 | A913-GR.50 |
| W382 | 4 | 350S162-43 | 2'-2 5/8" | 10.08 | A913-GR.50 |
| W423 | 4 | 350S162-43 | 2'-2 1/2" | 10.05 | A913-GR.50 |
| W439 | 4 | 350S162-43 | 2'-1 7/16" | 9.63 | A913-GR.50 |
| | | TOTAL WEIGHT THIS DRAWING | | 476 | |

FRONT VIEW

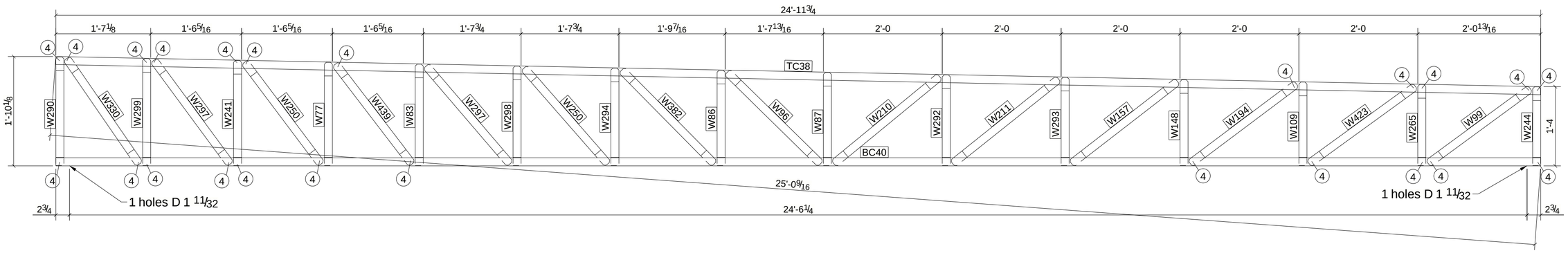


NOTES
1. NUMBER IN CIRCLE INDICATES THE TOTAL
   AMOUNT OF SCREWS PER CONNECTION ON BOTH SIDES.
2. INSTALL 1 SCREW ON EACH SIDE OF TRUSS UNLESS NOTED OTHERWISE

| REV | DESCRIPTION | DATE |
|---|---|---|
| | | |

| | | | |
|---|---|---|---|
| DESCRIPTION | | | |
| PROJECT NAME | | | |
| DRAWN BY | | JOB No. | DRG No. |
| DATE DRAWN | 07/19/2024 | | TR36 |

Tekla structures

# BILL OF MATERIAL

| MARK | QTY | DESCRIPTION | LENGTH | WEIGHT | REMARKS |
|---|---|---|---|---|---|
| TR37 | 1 | TRUSS | | | SQ-2 |
| BC45 | 1 | 350S162-43 | 5'-11 5/8" | 6.78 | A913-GR.50 |
| TC62 | 1 | 350S162-43 | 5'-11 5/8" | 6.79 | A913-GR.50 |
| W77 | 1 | 350S162-43 | 1'-8 7/8" | 1.98 | A913-GR.50 |
| W241 | 1 | 350S162-43 | 1'-9 1/4" | 2.02 | A913-GR.50 |
| W260 | 1 | 350S162-43 | 1'-8 9/16" | 1.95 | A913-GR.50 |
| W290 | 1 | 350S162-43 | 1'-10" | 2.09 | A913-GR.50 |
| W291 | 1 | 350S162-43 | 2'-1 1/4" | 2.39 | A913-GR.50 |
| W299 | 1 | 350S162-43 | 1'-9 5/8" | 2.05 | A913-GR.50 |
| W441 | 1 | 350S162-43 | 2'-1 11/16" | 2.43 | A913-GR.50 |
| W645 | 1 | 350S162-43 | 2'-1 13/16" | 2.44 | A913-GR.50 |
| W646 | 1 | 350S162-43 | 2'-0 9/16" | 2.32 | A913-GR.50 |
| | | TOTAL WEIGHT THIS DRAWING | | 33 | |

FRONT VIEW

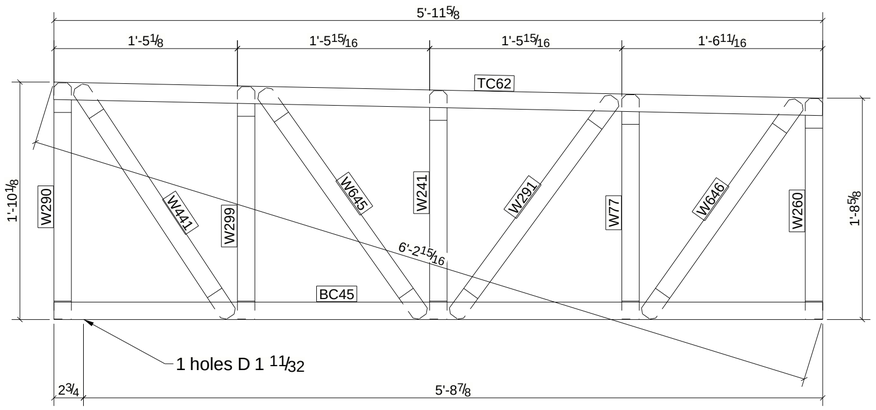


NOTES
1. NUMBER IN CIRCLE INDICATES THE TOTAL AMOUNT OF SCREWS PER CONNECTION ON BOTH SIDES.
2. INSTALL 1 SCREW ON EACH SIDE OF TRUSS UNLESS NOTED OTHERWISE

| REV | DESCRIPTION | DATE |
|---|---|---|
| | | |

| | | | |
|---|---|---|---|
| DESCRIPTION | | | |
| PROJECT NAME | | | |
| DRAWN BY | | JOB No. | DRG No. |
| DATE DRAWN | 07/19/2024 | | TR37 |

Tekla structures

# BILL OF MATERIAL

| MARK | QTY | DESCRIPTION | LENGTH | WEIGHT | REMARKS |
|---|---|---|---|---|---|
| TR38 | 1 | TRUSS | | | SQ-2 |
| BC69 | 1 | 350S162-43 | 3'-3" | 3.69 | A913-GR.50 |
| TC63 | 1 | 350S162-43 | 3'-3" | 3.69 | A913-GR.50 |
| w1 | 3 | 350S162-43 | 1'-8 1/2" | 5.82 | A913-GR.50 |
| w2 | 1 | 350S162-43 | 2'-1 7/8" | 2.45 | A913-GR.50 |
| w3 | 1 | 350S162-43 | 2'-0 15/16" | 2.36 | A913-GR.50 |
| | | TOTAL WEIGHT THIS DRAWING | | 18 | |

FRONT VIEW

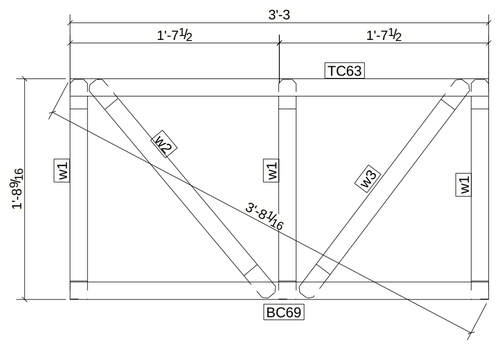


NOTES
1. NUMBER IN CIRCLE INDICATES THE TOTAL
   AMOUNT OF SCREWS PER CONNECTION ON BOTH SIDES.
2. INSTALL 1 SCREW ON EACH SIDE OF TRUSS UNLESS NOTED OTHERWISE

| REV | DESCRIPTION | DATE |
|---|---|---|
| | | |

| | | | |
|---|---|---|---|
| DESCRIPTION | | | |
| PROJECT NAME | | | |
| DRAWN BY | | JOB No. | DRG No. |
| DATE DRAWN | 07/16/2024 | | TR38 |

Tekla structures

# BILL OF MATERIAL

| MARK | QTY | DESCRIPTION | LENGTH | WEIGHT | REMARKS |
|---|---|---|---|---|---|
| TR39 | 1 | TRUSS | | | SQ-2 |
| BC70 | 1 | 350S162-43 | 3'-0" | 3.41 | A913-GR.50 |
| TC64 | 1 | 350S162-43 | 3'-0" | 3.41 | A913-GR.50 |
| W540 | 1 | 350S162-43 | 0'-8 7/16" | 0.80 | A913-GR.50 |
| W544 | 1 | 350S162-43 | 0'-8 1/16" | 0.77 | A913-GR.50 |
| W545 | 1 | 350S162-43 | 0'-7 3/4" | 0.73 | A913-GR.50 |
| W546 | 1 | 350S162-43 | 1'-4 5/16" | 1.54 | A913-GR.50 |
| W547 | 1 | 350S162-43 | 1'-4 1/16" | 1.52 | A913-GR.50 |
| | | TOTAL WEIGHT THIS DRAWING | | 12 | |

FRONT VIEW

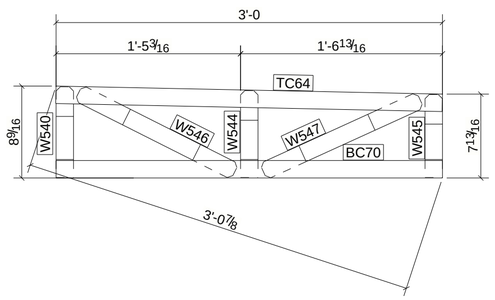


NOTES
1. NUMBER IN CIRCLE INDICATES THE TOTAL AMOUNT OF SCREWS PER CONNECTION ON BOTH SIDES.
2. INSTALL 1 SCREW ON EACH SIDE OF TRUSS UNLESS NOTED OTHERWISE

| REV | DESCRIPTION | DATE |
|---|---|---|
| | | |

| | | | |
|---|---|---|---|
| DESCRIPTION | | | |
| PROJECT NAME | | | |
| DRAWN BY | | JOB No. | DRG No. |
| DATE DRAWN | 07/16/2024 | | TR39 |

Tekla structures

# BILL OF MATERIAL

| MARK | QTY | DESCRIPTION | LENGTH | WEIGHT | REMARKS |
|---|---|---|---|---|---|
| TR40 | 1 | TRUSS | | | SQ-2 |
| BC71 | 1 | 350S162-43 | 3'-3" | 3.69 | A913-GR.50 |
| TC85 | 1 | 350S162-43 | 3'-3" | 3.69 | A913-GR.50 |
| W85 | 3 | 350S162-43 | 1'-7 11/16" | 5.59 | A913-GR.50 |
| W103 | 1 | 350S162-43 | 2'-0 1/16" | 2.28 | A913-GR.50 |
| W520 | 1 | 350S162-43 | 2'-1" | 2.37 | A913-GR.50 |
| | | TOTAL WEIGHT THIS DRAWING | | 18 | |

FRONT VIEW

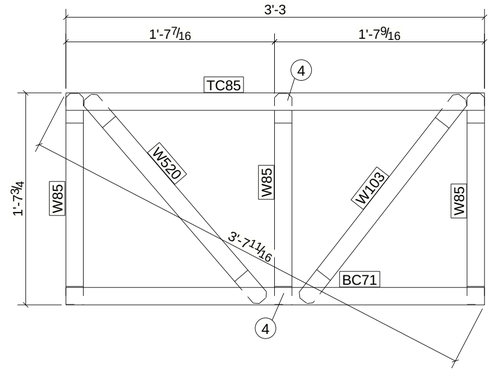


NOTES
1. NUMBER IN CIRCLE INDICATES THE TOTAL AMOUNT OF SCREWS PER CONNECTION ON BOTH SIDES.
2. INSTALL 1 SCREW ON EACH SIDE OF TRUSS UNLESS NOTED OTHERWISE

| REV | DESCRIPTION | DATE |
|---|---|---|
| | | |

| | | | |
|---|---|---|---|
| DESCRIPTION | | | |
| PROJECT NAME | | | |
| DRAWN BY | | JOB No. | DRG No. |
| DATE DRAWN | 07/16/2024 | | TR40 |

Tekla structures

# BILL OF MATERIAL

| MARK | QTY | DESCRIPTION | LENGTH | WEIGHT | REMARKS |
|---|---|---|---|---|---|
| TR41 | 1 | TRUSS | | | SQ-2 |
| BC41 | 1 | 350S162-43 | 15'-5 1/8" | 17.54 | A913-GR.50 |
| PL29 | 8 | PL0.0430X3.0000 | 0'-6" | 1.76 | A36 |
| TC39 | 1 | 350S162-43 | 15'-5 3/16" | 17.54 | A913-GR.50 |
| W85 | 1 | 350S162-43 | 1'-7 5/8" | 1.86 | A913-GR.50 |
| W95 | 1 | 350S162-43 | 2'-2 1/4" | 2.48 | A913-GR.50 |
| W109 | 1 | 350S162-43 | 1'-4 13/16" | 1.60 | A913-GR.50 |
| W140 | 1 | 350S162-43 | 1'-5 3/4" | 1.68 | A913-GR.50 |
| W141 | 1 | 350S162-43 | 1'-6 1/4" | 1.73 | A913-GR.50 |
| W184 | 1 | 350S162-43 | 1'-7 3/16" | 1.82 | A913-GR.50 |
| W193 | 1 | 350S162-43 | 2'-3 1/16" | 2.57 | A913-GR.50 |
| W194 | 1 | 350S162-43 | 2'-2 13/16" | 2.54 | A913-GR.50 |
| W218 | 1 | 350S162-43 | 2'-1 11/16" | 2.44 | A913-GR.50 |
| W231 | 1 | 350S162-43 | 2'-0 7/8" | 2.35 | A913-GR.50 |
| W244 | 1 | 350S162-43 | 1'-3 15/16" | 1.51 | A913-GR.50 |
| W254 | 1 | 350S162-43 | 2'-3 3/8" | 2.59 | A913-GR.50 |
| W302 | 1 | 350S162-43 | 1'-6 11/16" | 1.77 | A913-GR.50 |
| W304 | 1 | 350S162-43 | 1'-5 5/16" | 1.64 | A913-GR.50 |
| W305 | 1 | 350S162-43 | 1'-4 3/8" | 1.55 | A913-GR.50 |
| W306 | 1 | 350S162-43 | 2'-3 1/8" | 2.57 | A913-GR.50 |
| W308 | 1 | 350S162-43 | 2'-1 15/16" | 2.46 | A913-GR.50 |
| | | TOTAL WEIGHT THIS DRAWING | | 72 | |

FRONT VIEW

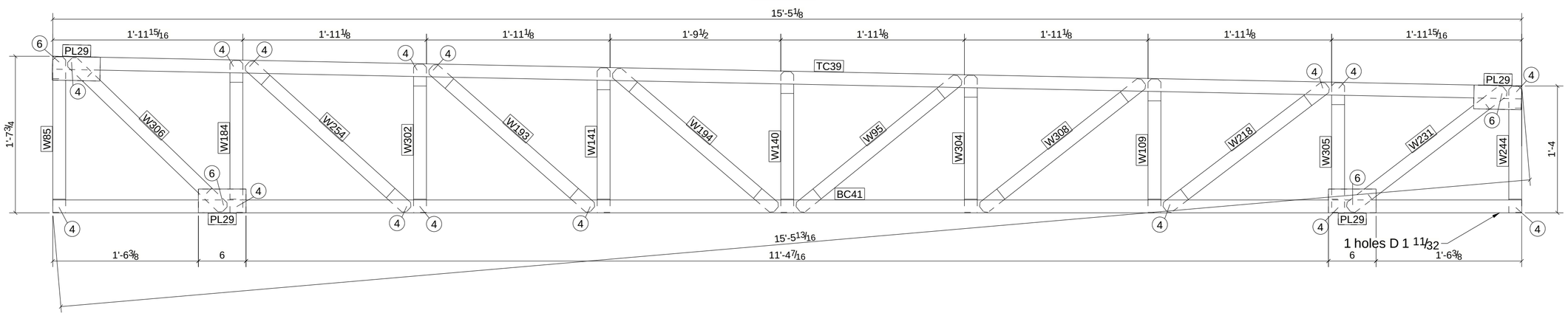


NOTES
1. NUMBER IN CIRCLE INDICATES THE TOTAL
   AMOUNT OF SCREWS PER CONNECTION ON BOTH SIDES.
2. INSTALL 1 SCREW ON EACH SIDE OF TRUSS UNLESS NOTED OTHERWISE

| REV | DESCRIPTION | DATE |
|---|---|---|
| | | |

| | | | |
|---|---|---|---|
| DESCRIPTION | | | |
| PROJECT NAME | | | |
| DRAWN BY | | JOB No. | DRG No. |
| DATE DRAWN | 07/19/2024 | | TR41 |

Tekla structures

# BILL OF MATERIAL

| MARK | QTY | DESCRIPTION | LENGTH | WEIGHT | REMARKS |
|---|---|---|---|---|---|
| TR42 | 5 | TRUSSES | | | SQ-2 |
| BC42 | 5 | 350S162-43 | 24'-11 3/4" | 141.96 | A913-GR.50 |
| PL29 | 140 | PL0.0430X3.0000 | 0'-6" | 30.74 | A36 |
| PL31 | 20 | PL0.0430X3.0000 | 0'-3" | 2.19 | A36 |
| TC40 | 5 | 350S162-43 | 24'-11 13*** | 141.99 | A913-GR.50 |
| W86 | 5 | 350S162-43 | 1'-7 1/4" | 9.11 | A913-GR.50 |
| W87 | 5 | 350S162-43 | 1'-6 13/16" | 8.92 | A913-GR.50 |
| W99 | 5 | 350S162-43 | 2'-1 9/16" | 12.10 | A913-GR.50 |
| W109 | 5 | 350S162-43 | 1'-4 7/8" | 8.00 | A913-GR.50 |
| W146 | 5 | 350S162-43 | 1'-8 7/16" | 9.67 | A913-GR.50 |
| W148 | 5 | 350S162-43 | 1'-5 3/8" | 8.23 | A913-GR.50 |
| W153 | 5 | 350S162-43 | 2'-1 3/8" | 12.02 | A913-GR.50 |
| W195 | 5 | 350S162-43 | 2'-2 7/16" | 12.53 | A913-GR.50 |
| W202 | 5 | 350S162-43 | 1'-7 5/8" | 9.30 | A913-GR.50 |
| W231 | 5 | 350S162-43 | 2'-0 13/16" | 11.74 | A913-GR.50 |
| W244 | 5 | 350S162-43 | 1'-3 15/16" | 7.54 | A913-GR.50 |
| W247 | 5 | 350S162-43 | 2'-3 1/4" | 12.92 | A913-GR.50 |
| W249 | 5 | 350S162-43 | 2'-2 11/16" | 12.64 | A913-GR.50 |
| W250 | 5 | 350S162-43 | 2'-1 11/16" | 12.17 | A913-GR.50 |
| W265 | 5 | 350S162-43 | 1'-4 3/8" | 7.76 | A913-GR.50 |
| W290 | 5 | 350S162-43 | 1'-10" | 10.42 | A913-GR.50 |
| W292 | 5 | 350S162-43 | 1'-6 3/8" | 8.69 | A913-GR.50 |
| W293 | 5 | 350S162-43 | 1'-5 7/8" | 8.46 | A913-GR.50 |
| W297 | 5 | 350S162-43 | 2'-2" | 12.31 | A913-GR.50 |
| W300 | 5 | 350S162-43 | 2'-3" | 12.78 | A913-GR.50 |
| W301 | 5 | 350S162-43 | 2'-2 7/16" | 12.51 | A913-GR.50 |
| W309 | 5 | 350S162-43 | 1'-8 13/16" | 9.86 | A913-GR.50 |
| W310 | 5 | 350S162-43 | 1'-8" | 9.48 | A913-GR.50 |
| W312 | 5 | 350S162-43 | 2'-1 1/16" | 11.88 | A913-GR.50 |
| W443 | 5 | 350S162-43 | 2'-2 5/8" | 12.60 | A913-GR.50 |
| W457 | 5 | 350S162-43 | 2'-2 5/16" | 12.45 | A913-GR.50 |
| W458 | 5 | 350S162-43 | 2'-3 9/16" | 13.06 | A913-GR.50 |
| W723 | 5 | 350S162-43 | 1'-9 5/8" | 10.24 | A913-GR.50 |
| W724 | 5 | 350S162-43 | 1'-9 3/16" | 10.05 | A913-GR.50 |
| | | TOTAL WEIGHT THIS DRAWING | | 626 | |

FRONT VIEW

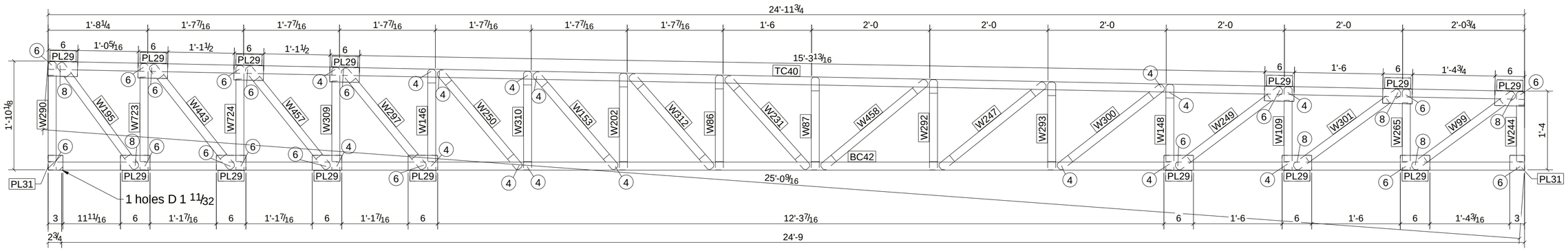


NOTES
1. NUMBER IN CIRCLE INDICATES THE TOTAL
   AMOUNT OF SCREWS PER CONNECTION ON BOTH SIDES.
2. INSTALL 1 SCREW ON EACH SIDE OF TRUSS UNLESS NOTED OTHERWISE

| REV | DESCRIPTION | DATE |
|---|---|---|
| | | |

| | | | |
|---|---|---|---|
| DESCRIPTION | | | |
| PROJECT NAME | | | |
| DRAWN BY | | JOB No. | DRG No. |
| DATE DRAWN | 07/19/2024 | | TR42 |

Tekla structures

# BILL OF MATERIAL

| MARK | QTY | DESCRIPTION | LENGTH | WEIGHT | REMARKS |
|---|---|---|---|---|---|
| TR43 | 2 | TRUSSES | | | SQ-2 |
| P353 | 2 | 350S162-43 | 35'-9 5/8" | 81.39 | A913-GR.50 |
| P352 | 2 | 350S162-43 | 35'-9 11/16" | 81.41 | A913-GR.50 |
| PL21 | 4 | PL0.0430X3.0000 | 0'-7" | 1.02 | A36 |
| PL29 | 72 | PL0.0430X3.0000 | 0'-6" | 15.81 | A36 |
| W92 | 2 | 350S162-43 | 1'-4 3/4" | 3.18 | A913-GR.50 |
| W93 | 2 | 350S162-43 | 1'-4 5/16" | 3.10 | A913-GR.50 |
| W98 | 2 | 350S162-43 | 2'-1 13/16" | 4.89 | A913-GR.50 |
| W101 | 2 | 350S162-43 | 2'-0 11/16" | 4.68 | A913-GR.50 |
| W102 | 2 | 350S162-43 | 2'-0 7/16" | 4.62 | A913-GR.50 |
| W103 | 2 | 350S162-43 | 2'-0 1/8" | 4.57 | A913-GR.50 |
| W113 | 2 | 350S162-43 | 1'-6 1/2" | 3.50 | A913-GR.50 |
| W114 | 2 | 350S162-43 | 1'-6 15/16" | 3.59 | A913-GR.50 |
| W115 | 2 | 350S162-43 | 1'-7 3/8" | 3.67 | A913-GR.50 |
| W147 | 2 | 350S162-43 | 1'-8 11/16" | 3.91 | A913-GR.50 |
| W154 | 2 | 350S162-43 | 2'-1 9/16" | 4.84 | A913-GR.50 |
| W157 | 2 | 350S162-43 | 2'-3" | 5.12 | A913-GR.50 |
| W191 | 2 | 350S162-43 | 2'-4" | 5.30 | A913-GR.50 |
| W192 | 4 | 350S162-43 | 2'-3 11/16" | 10.48 | A913-GR.50 |
| W193 | 2 | 350S162-43 | 2'-3 1/16" | 5.12 | A913-GR.50 |
| W195 | 4 | 350S162-43 | 2'-2 7/16" | 10.02 | A913-GR.50 |
| W196 | 4 | 350S162-43 | 2'-2 1/8" | 9.91 | A913-GR.50 |
| W201 | 2 | 350S162-43 | 1'-8 1/4" | 3.83 | A913-GR.50 |
| W211 | 2 | 350S162-43 | 2'-3 5/16" | 5.18 | A913-GR.50 |
| W212 | 2 | 350S162-43 | 2'-1 7/8" | 4.90 | A913-GR.50 |
| W214 | 2 | 350S162-43 | 1'-9 1/16" | 4.00 | A913-GR.50 |
| W227 | 2 | 350S162-43 | 1'-11 5/16" | 4.42 | A913-GR.50 |
| W243 | 2 | 350S162-43 | 1'-7 13/16" | 3.75 | A913-GR.50 |
| W244 | 2 | 350S162-43 | 1'-3 15/16" | 3.02 | A913-GR.50 |
| W254 | 2 | 350S162-43 | 2'-3 3/8" | 5.18 | A913-GR.50 |
| W314 | 2 | 350S162-43 | 2'-0 5/8" | 4.67 | A913-GR.50 |
| W315 | 2 | 350S162-43 | 2'-0 3/8" | 4.62 | A913-GR.50 |
| W316 | 2 | 350S162-43 | 2'-0 1/8" | 4.57 | A913-GR.50 |
| W317 | 2 | 350S162-43 | 1'-11 3/4" | 4.50 | A913-GR.50 |
| W318 | 2 | 350S162-43 | 1'-11 3/8" | 4.43 | A913-GR.50 |
| W319 | 2 | 350S162-43 | 1'-11 1/16" | 4.36 | A913-GR.50 |
| W320 | 2 | 350S162-43 | 1'-10 11/16" | 4.30 | A913-GR.50 |
| W321 | 2 | 350S162-43 | 1'-10 5/16" | 4.23 | A913-GR.50 |
| W322 | 2 | 350S162-43 | 1'-9 15/16" | 4.16 | A913-GR.50 |
| W323 | 2 | 350S162-43 | 1'-9 1/2" | 4.08 | A913-GR.50 |
| W326 | 2 | 350S162-43 | 1'-6 1/16" | 3.42 | A913-GR.50 |
| W327 | 2 | 350S162-43 | 1'-5 5/8" | 3.34 | A913-GR.50 |
| W328 | 2 | 350S162-43 | 1'-5 3/16" | 3.26 | A913-GR.50 |
| W333 | 2 | 350S162-43 | 2'-1 7/8" | 4.90 | A913-GR.50 |
| W334 | 2 | 350S162-43 | 2'-1" | 4.73 | A913-GR.50 |
| W433 | 2 | 350S162-43 | 2'-2 3/4" | 5.07 | A913-GR.50 |
| W470 | 2 | 350S162-43 | 2'-1 1/4" | 4.78 | A913-GR.50 |
| | | TOTAL WEIGHT THIS DRAWING | | 378 | |

FRONT VIEW

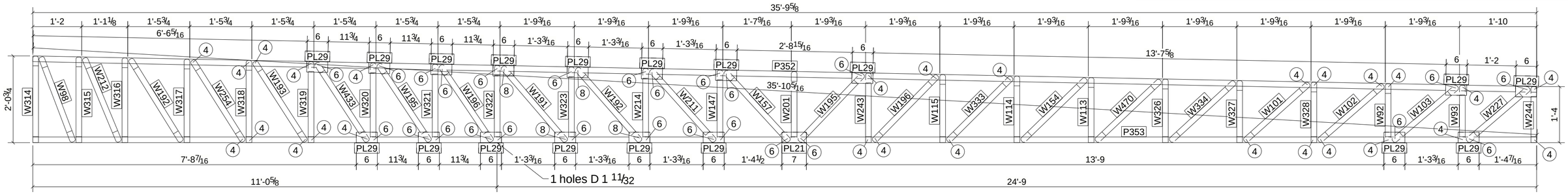


NOTES
1. NUMBER IN CIRCLE INDICATES THE TOTAL
   AMOUNT OF SCREWS PER CONNECTION ON BOTH SIDES.
2. INSTALL 1 SCREW ON EACH SIDE OF TRUSS UNLESS NOTED OTHERWISE

| REV | DESCRIPTION | DATE |
|---|---|---|
| | | |

| | | | |
|---|---|---|---|
| DESCRIPTION | | | |
| PROJECT NAME | | | |
| DRAWN BY | | JOB No. | DRG No. |
| DATE DRAWN | 07/19/2024 | | TR43 |

Tekla structures

# BILL OF MATERIAL

| MARK | QTY | DESCRIPTION | LENGTH | WEIGHT | REMARKS |
|---|---|---|---|---|---|
| TR44 | 7 | TRUSSES | | | SQ-2 |
| BC43 | 7 | 350S162-43 | 35'-9 1/2" | 284.78 | A913-GR.50 |
| P25 | 14 | 350S162-43 | 1'-3 7/8" | 21.05 | A913-GR.50 |
| P49 | 7 | 350S162-43 | 35'-9 9/16" | 284.84 | A913-GR.50 |
| P51 | 7 | 350S162-43 | 5'-0 3/16" | 39.92 | A913-GR.50 |
| P52 | 7 | 350S162-43 | 1'-11 7/16" | 15.54 | A913-GR.50 |
| P53 | 7 | 350S162-43 | 1'-9 15/16" | 14.56 | A913-GR.50 |
| P55 | 7 | 350S162-43 | 1'-9 3/16" | 14.04 | A913-GR.50 |
| P56 | 7 | 350S162-43 | 1'-8 3/8" | 13.52 | A913-GR.50 |
| P57 | 7 | 350S162-43 | 1'-8" | 13.27 | A913-GR.50 |
| P59 | 7 | 350S162-43 | 1'-6 3/8" | 12.17 | A913-GR.50 |
| P61 | 7 | 350S162-43 | 1'-5 3/8" | 11.52 | A913-GR.50 |
| P63 | 7 | 350S162-43 | 1'-6 13/16" | 12.49 | A913-GR.50 |
| P65 | 7 | 350S162-43 | 1'-11 1/16" | 15.31 | A913-GR.50 |
| P67 | 7 | 350S162-43 | 2'-2 11/16" | 17.68 | A913-GR.50 |
| P69 | 7 | 350S162-43 | 2'-2 1/16" | 17.27 | A913-GR.50 |
| P70 | 7 | 350S162-43 | 2'-1 3/4" | 17.07 | A913-GR.50 |
| P71 | 7 | 350S162-43 | 2'-1 3/16" | 16.71 | A913-GR.50 |
| P72 | 7 | 350S162-43 | 2'-0 15/16" | 16.52 | A913-GR.50 |
| P73 | 7 | 350S162-43 | 2'-0 5/8" | 16.32 | A913-GR.50 |
| P74 | 7 | 350S162-43 | 2'-0 5/16" | 16.13 | A913-GR.50 |
| P75 | 7 | 350S162-43 | 2'-3 9/16" | 18.28 | A913-GR.50 |
| P76 | 7 | 350S162-43 | 2'-3 1/4" | 18.08 | A913-GR.50 |
| P77 | 7 | 350S162-43 | 2'-3 1/16" | 17.95 | A913-GR.50 |
| P78 | 7 | 350S162-43 | 2'-2 11/16" | 17.70 | A913-GR.50 |
| P79 | 7 | 350S162-43 | 2'-2 7/16" | 17.52 | A913-GR.50 |
| P82 | 7 | 350S162-43 | 1'-2 13/16" | 9.83 | A913-GR.50 |
| P87 | 7 | 350S162-43 | 1'-5 7/8" | 11.84 | A913-GR.50 |
| P92 | 7 | 350S162-43 | 1'-3 15/16" | 10.56 | A913-GR.50 |
| P107 | 7 | 350S162-43 | 2'-0 5/8" | 16.34 | A913-GR.50 |
| P118 | 7 | 350S162-43 | 1'-9 9/16" | 14.30 | A913-GR.50 |
| P119 | 7 | 350S162-43 | 1'-8 13/16" | 13.78 | A913-GR.50 |
| P121 | 7 | 350S162-43 | 1'-7 5/8" | 13.01 | A913-GR.50 |
| P122 | 7 | 350S162-43 | 1'-7 1/4" | 12.75 | A913-GR.50 |
| P128 | 7 | 350S162-43 | 1'-4 7/8" | 11.19 | A913-GR.50 |
| P132 | 7 | 350S162-43 | 1'-4 3/8" | 10.87 | A913-GR.50 |
| P133 | 7 | 350S162-43 | 2'-2 9/16" | 17.61 | A913-GR.50 |
| P134 | 7 | 350S162-43 | 2'-2 3/8" | 17.48 | A913-GR.50 |
| P135 | 7 | 350S162-43 | 2'-3" | 17.89 | A913-GR.50 |
| P136 | 7 | 350S162-43 | 2'-1 9/16" | 16.94 | A913-GR.50 |
| P138 | 7 | 350S162-43 | 1'-3 5/8" | 10.38 | A913-GR.50 |
| P171 | 7 | 350S162-43 | 1'-10 11/16" | 15.06 | A913-GR.50 |
| P172 | 7 | 350S162-43 | 1'-10 5/16" | 14.81 | A913-GR.50 |
| P173 | 7 | 350S162-43 | 2'-3 3/16" | 18.02 | A913-GR.50 |
| P174 | 7 | 350S162-43 | 2'-2 7/8" | 17.82 | A913-GR.50 |
| PL21 | 14 | PL0.0430X3.0000 | 0'-7" | 3.59 | A36 |
| PL29 | 210 | PL0.0430X3.0000 | 0'-6" | 46.11 | A36 |
| | | TOTAL WEIGHT THIS DRAWING | | 1280 | |

FRONT VIEW

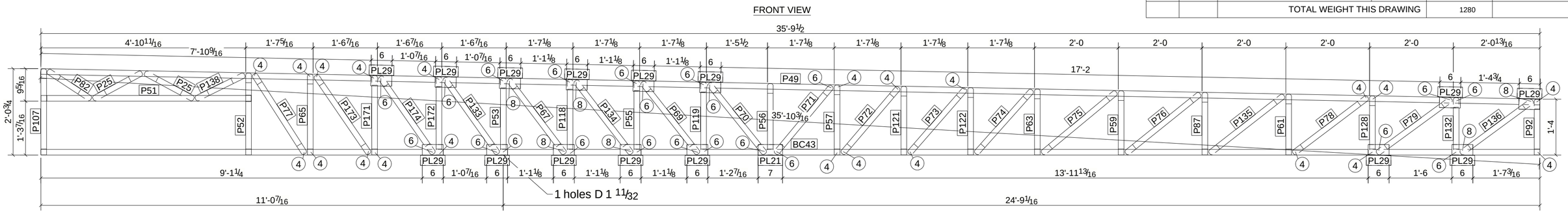


NOTES
1. NUMBER IN CIRCLE INDICATES THE TOTAL
   AMOUNT OF SCREWS PER CONNECTION ON BOTH SIDES.
2. INSTALL 1 SCREW ON EACH SIDE OF TRUSS UNLESS NOTED OTHERWISE

| REV | DESCRIPTION | DATE |
|---|---|---|
| | | |

| | | | |
|---|---|---|---|
| DESCRIPTION | | | |
| PROJECT NAME | | | |
| DRAWN BY | | JOB No. | DRG No. |
| DATE DRAWN | 07/19/2024 | | TR44 |

Tekla structures

# BILL OF MATERIAL

| MARK | QTY | DESCRIPTION | LENGTH | WEIGHT | REMARKS |
|---|---|---|---|---|---|
| TR45 | 1 | TRUSS | | | SQ-2 |
| BC46 | 1 | 350S162-43 | 35'-9 1/2" | 40.68 | A913-GR.50 |
| PL21 | 2 | PL0.0430X3.0000 | 0'-7" | 0.51 | A36 |
| PL29 | 40 | PL0.0430X3.0000 | 0'-6" | 8.78 | A36 |
| TC43 | 1 | 350S162-43 | 35'-9 9/16" | 40.69 | A913-GR.50 |
| W92 | 1 | 350S162-43 | 1'-4 3/4" | 1.59 | A913-GR.50 |
| W93 | 1 | 350S162-43 | 1'-4 5/16" | 1.55 | A913-GR.50 |
| W101 | 1 | 350S162-43 | 2'-0 11/16" | 2.34 | A913-GR.50 |
| W102 | 1 | 350S162-43 | 2'-0 7/16" | 2.31 | A913-GR.50 |
| W103 | 1 | 350S162-43 | 2'-0 1/8" | 2.29 | A913-GR.50 |
| W104 | 1 | 350S162-43 | 1'-11 7/8" | 2.26 | A913-GR.50 |
| W113 | 1 | 350S162-43 | 1'-6 1/2" | 1.75 | A913-GR.50 |
| W114 | 1 | 350S162-43 | 1'-6 15/16" | 1.79 | A913-GR.50 |
| W115 | 1 | 350S162-43 | 1'-7 3/8" | 1.83 | A913-GR.50 |
| W147 | 1 | 350S162-43 | 1'-8 11/16" | 1.96 | A913-GR.50 |
| W154 | 1 | 350S162-43 | 2'-1 9/16" | 2.42 | A913-GR.50 |
| W191 | 1 | 350S162-43 | 2'-4" | 2.65 | A913-GR.50 |
| W195 | 1 | 350S162-43 | 2'-2 7/16" | 2.51 | A913-GR.50 |
| W196 | 1 | 350S162-43 | 2'-2 1/8" | 2.48 | A913-GR.50 |
| W201 | 1 | 350S162-43 | 1'-8 1/4" | 1.92 | A913-GR.50 |
| W205 | 1 | 350S162-43 | 2'-5 1/2" | 2.79 | A913-GR.50 |
| W206 | 1 | 350S162-43 | 2'-5 1/4" | 2.77 | A913-GR.50 |
| W227 | 2 | 350S162-43 | 1'-11 5/16" | 4.42 | A913-GR.50 |
| W235 | 1 | 350S162-43 | 1'-11 1/8" | 2.19 | A913-GR.50 |
| W243 | 1 | 350S162-43 | 1'-7 13/16" | 1.88 | A913-GR.50 |
| W244 | 1 | 350S162-43 | 1'-3 15/16" | 1.51 | A913-GR.50 |
| W248 | 1 | 350S162-43 | 2'-3" | 2.56 | A913-GR.50 |
| W319 | 1 | 350S162-43 | 1'-11" | 2.18 | A913-GR.50 |
| W321 | 1 | 350S162-43 | 1'-10 5/16" | 2.12 | A913-GR.50 |
| W322 | 1 | 350S162-43 | 1'-9 15/16" | 2.08 | A913-GR.50 |
| W323 | 1 | 350S162-43 | 1'-9 1/2" | 2.04 | A913-GR.50 |
| W326 | 1 | 350S162-43 | 1'-6 1/16" | 1.71 | A913-GR.50 |
| W327 | 1 | 350S162-43 | 1'-5 5/8" | 1.67 | A913-GR.50 |
| W328 | 1 | 350S162-43 | 1'-5 3/16" | 1.63 | A913-GR.50 |
| W331 | 1 | 350S162-43 | 1'-11 3/4" | 2.25 | A913-GR.50 |
| W333 | 1 | 350S162-43 | 2'-1 7/8" | 2.45 | A913-GR.50 |
| W334 | 1 | 350S162-43 | 2'-1" | 2.37 | A913-GR.50 |
| W371 | 1 | 350S162-43 | 1'-11 7/16" | 2.22 | A913-GR.50 |
| W379 | 1 | 350S162-43 | 4'-11 11/16" | 5.66 | A913-GR.50 |
| W380 | 1 | 350S162-43 | 1'-10 13/16" | 2.16 | A913-GR.50 |
| W381 | 1 | 350S162-43 | 1'-8 15/16" | 1.98 | A913-GR.50 |
| W382 | 1 | 350S162-43 | 2'-2 9/16" | 2.52 | A913-GR.50 |
| W385 | 2 | 350S162-43 | 1'-3 9/16" | 2.94 | A913-GR.50 |
| W387 | 1 | 350S162-43 | 1'-2 3/4" | 1.40 | A913-GR.50 |
| W391 | 1 | 350S162-43 | 1'-3 9/16" | 1.47 | A913-GR.50 |
| W470 | 1 | 350S162-43 | 2'-1 1/4" | 2.39 | A913-GR.50 |
| W590 | 1 | 350S162-43 | 2'-0 5/8" | 2.33 | A913-GR.50 |
| W724 | 1 | 350S162-43 | 1'-9 1/4" | 2.01 | A913-GR.50 |
| | | TOTAL WEIGHT THIS DRAWING | | 188 | |

FRONT VIEW

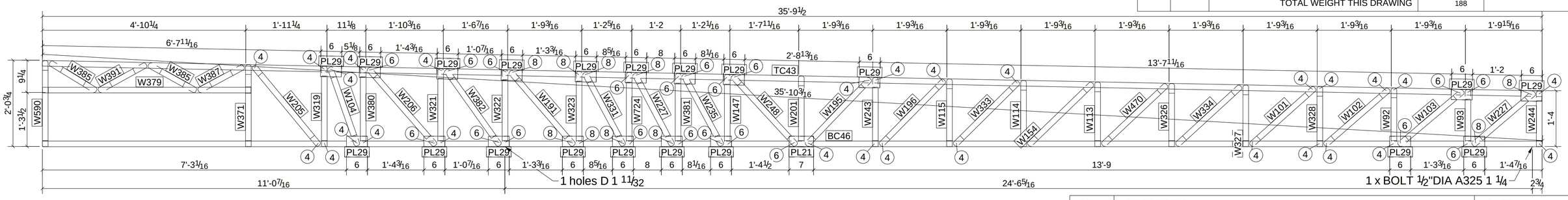


| REV | DESCRIPTION | DATE |
|---|---|---|
| | | |

| | | | |
|---|---|---|---|
| DESCRIPTION | | | |
| PROJECT NAME | | | |
| DRAWN BY | | JOB No. | DRG No. |
| DATE DRAWN | 07/19/2024 | | TR45 |

Tekla structures

# BILL OF MATERIAL

| MARK | QTY | DESCRIPTION | LENGTH | WEIGHT | REMARKS |
|---|---|---|---|---|---|
| TR46 | 1 | TRUSS | | | SQ-2 |
| BC72 | 1 | 350S162-43 | 6'-7 1/8" | 7.50 | A913-GR.50 |
| TC65 | 1 | 350S162-43 | 6'-7 1/8" | 7.50 | A913-GR.50 |
| W282 | 1 | 350S162-43 | 1'-3 3/4" | 1.49 | A913-GR.50 |
| W370 | 1 | 350S162-43 | 2'-0 3/4" | 2.35 | A913-GR.50 |
| W373 | 1 | 350S162-43 | 2'-3 11/16" | 2.62 | A913-GR.50 |
| W390 | 2 | 350S162-43 | 1'-3 3/4" | 2.99 | A913-GR.50 |
| W392 | 1 | 350S162-43 | 1'-3 1/2" | 1.47 | A913-GR.50 |
| W548 | 1 | 350S162-43 | 5'-0 3/16" | 5.70 | A913-GR.50 |
| W549 | 1 | 350S162-43 | 1'-11 5/8" | 2.24 | A913-GR.50 |
| W550 | 1 | 350S162-43 | 1'-11 1/4" | 2.20 | A913-GR.50 |
| | | TOTAL WEIGHT THIS DRAWING | | 36 | |

FRONT VIEW

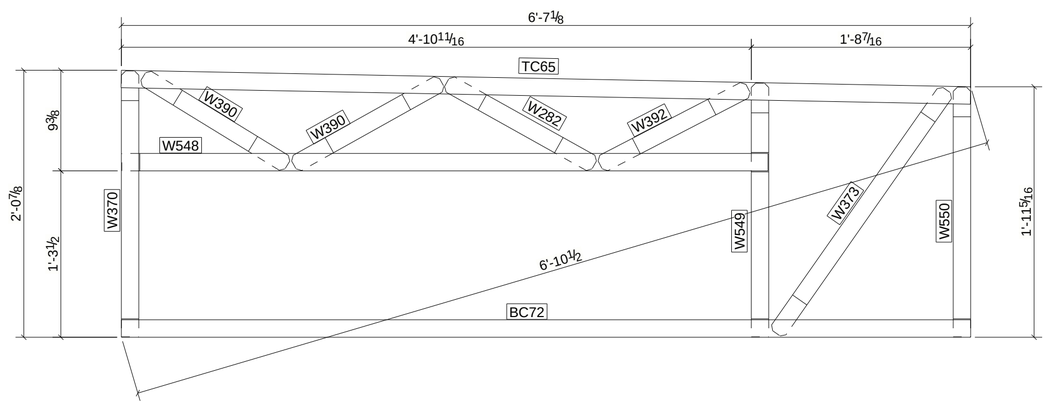


NOTES
1. NUMBER IN CIRCLE INDICATES THE TOTAL AMOUNT OF SCREWS PER CONNECTION ON BOTH SIDES.
2. INSTALL 1 SCREW ON EACH SIDE OF TRUSS UNLESS NOTED OTHERWISE

| REV | DESCRIPTION | DATE |
|---|---|---|
| | | |

| | | | |
|---|---|---|---|
| DESCRIPTION | | | |
| PROJECT NAME | | | |
| DRAWN BY | | JOB No. | DRG No. |
| DATE DRAWN | 08/14/2024 | | TR46 |

Tekla structures

# BILL OF MATERIAL

| MARK | QTY | DESCRIPTION | LENGTH | WEIGHT | REMARKS |
|---|---|---|---|---|---|
| TR47 | 1 | TRUSS | | | SQ-2 |
| BC73 | 1 | 350S162-43 | 3'-8 1/2" | 4.22 | A913-GR.50 |
| TC66 | 1 | 350S162-43 | 3'-8 1/2" | 4.22 | A913-GR.50 |
| W277 | 1 | 350S162-43 | 2'-5 1/8" | 2.76 | A913-GR.50 |
| W551 | 3 | 350S162-43 | 1'-11 1/8" | 6.56 | A913-GR.50 |
| W679 | 1 | 350S162-43 | 2'-4 13/16" | 2.73 | A913-GR.50 |
| | | TOTAL WEIGHT THIS DRAWING | | 20 | |

FRONT VIEW

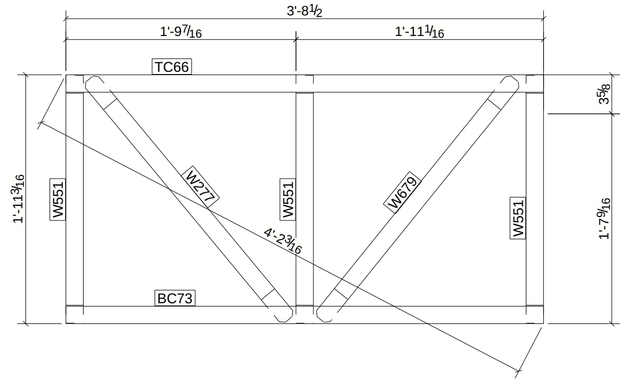


NOTES
1. NUMBER IN CIRCLE INDICATES THE TOTAL
   AMOUNT OF SCREWS PER CONNECTION ON BOTH SIDES.
2. INSTALL 1 SCREW ON EACH SIDE OF TRUSS UNLESS NOTED OTHERWISE

| REV | DESCRIPTION | DATE |
|---|---|---|
| | | |

| | | | |
|---|---|---|---|
| DESCRIPTION | | | |
| PROJECT NAME | | | |
| DRAWN BY | | JOB No. | DRG No. |
| DATE DRAWN | 08/14/2024 | | TR47 |

Tekla structures

# BILL OF MATERIAL

| MARK | QTY | DESCRIPTION | LENGTH | WEIGHT | REMARKS |
|---|---|---|---|---|---|
| TR48 | 1 | TRUSS | | | SQ-2 |
| BC74 | 1 | 350S162-43 | 3'-8 1/2" | 4.22 | A913-GR.50 |
| P2 | 1 | 350S162-43 | 0'-3 1/4" | 0.31 | A913-GR.50 |
| P33 | 1 | 350S162-43 | 0'-5 9/16" | 0.53 | A913-GR.50 |
| TC67 | 1 | 350S162-43 | 3'-6 7/8" | 4.06 | A913-GR.50 |
| W180 | 1 | 350S162-43 | 2'-2 1/4" | 2.49 | A913-GR.50 |
| W255 | 1 | 350S162-43 | 1'-5" | 1.61 | A913-GR.50 |
| W266 | 1 | 350S162-43 | 2'-3 1/2" | 2.61 | A913-GR.50 |
| W553 | 2 | 350S162-43 | 1'-9" | 3.97 | A913-GR.50 |
| | | TOTAL WEIGHT THIS DRAWING | | 20 | |

FRONT VIEW

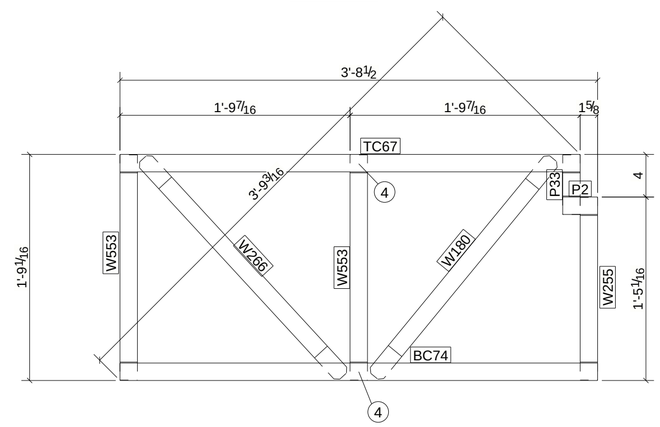


NOTES
1. NUMBER IN CIRCLE INDICATES THE TOTAL
   AMOUNT OF SCREWS PER CONNECTION ON BOTH SIDES.
2. INSTALL 1 SCREW ON EACH SIDE OF TRUSS UNLESS NOTED OTHERWISE

| REV | DESCRIPTION | DATE |
|---|---|---|
| | | |

| | | | |
|---|---|---|---|
| DESCRIPTION | | | |
| PROJECT NAME | | | |
| DRAWN BY | | JOB No. | DRG No. |
| DATE DRAWN | 08/14/2024 | | TR48 |

Tekla structures

# BILL OF MATERIAL

| MARK | QTY | DESCRIPTION | LENGTH | WEIGHT | REMARKS |
|---|---|---|---|---|---|
| TR49 | 1 | TRUSS | | | SQ-2 |
| BC50 | 1 | 350S162-43 | 19'-2 13/16" | 21.86 | A913-GR.50 |
| P35 | 1 | 350S162-43 | 19'-2 7/8" | 21.87 | A913-GR.50 |
| W85 | 1 | 350S162-43 | 1'-7 11/16" | 1.86 | A913-GR.50 |
| W91 | 1 | 350S162-43 | 1'-8 9/16" | 1.95 | A913-GR.50 |
| W95 | 1 | 350S162-43 | 2'-2 1/4" | 2.48 | A913-GR.50 |
| W97 | 1 | 350S162-43 | 1'-6 1/4" | 1.73 | A913-GR.50 |
| W102 | 1 | 350S162-43 | 2'-0 7/16" | 2.31 | A913-GR.50 |
| W109 | 1 | 350S162-43 | 1'-4 7/8" | 1.60 | A913-GR.50 |
| W117 | 1 | 350S162-43 | 1'-8 1/8" | 1.91 | A913-GR.50 |
| W140 | 1 | 350S162-43 | 1'-5 13/16" | 1.68 | A913-GR.50 |
| W162 | 1 | 350S162-43 | 2'-3 7/16" | 2.60 | A913-GR.50 |
| W184 | 1 | 350S162-43 | 1'-7 3/16" | 1.82 | A913-GR.50 |
| W193 | 1 | 350S162-43 | 2'-3 1/8" | 2.57 | A913-GR.50 |
| W194 | 1 | 350S162-43 | 2'-2 13/16" | 2.54 | A913-GR.50 |
| W197 | 1 | 350S162-43 | 2'-1 3/8" | 2.40 | A913-GR.50 |
| W244 | 1 | 350S162-43 | 1'-3 15/16" | 1.51 | A913-GR.50 |
| W295 | 1 | 350S162-43 | 2'-1 5/8" | 2.43 | A913-GR.50 |
| W302 | 1 | 350S162-43 | 1'-6 3/4" | 1.77 | A913-GR.50 |
| W304 | 1 | 350S162-43 | 1'-5 5/16" | 1.64 | A913-GR.50 |
| W305 | 1 | 350S162-43 | 1'-4 3/8" | 1.55 | A913-GR.50 |
| W308 | 1 | 350S162-43 | 2'-1 15/16" | 2.46 | A913-GR.50 |
| W456 | 1 | 350S162-43 | 2'-3 3/4" | 2.63 | A913-GR.50 |
| W458 | 1 | 350S162-43 | 2'-3 1/2" | 2.60 | A913-GR.50 |
| | | TOTAL WEIGHT THIS DRAWING | | 88 | |

FRONT VIEW

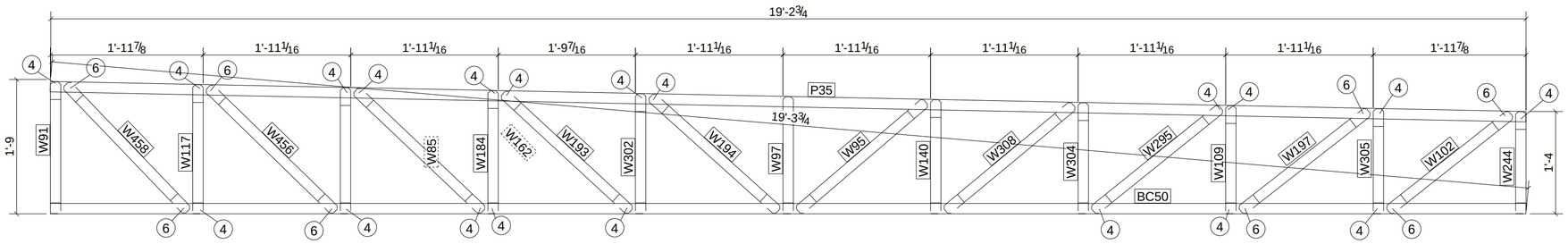


NOTES
1. NUMBER IN CIRCLE INDICATES THE TOTAL AMOUNT OF SCREWS PER CONNECTION ON BOTH SIDES.
2. INSTALL 1 SCREW ON EACH SIDE OF TRUSS UNLESS NOTED OTHERWISE

| REV | DESCRIPTION | DATE |
|---|---|---|
| | | |

| | | | |
|---|---|---|---|
| DESCRIPTION | | | |
| PROJECT NAME | | | |
| DRAWN BY | | JOB No. | DRG No. |
| DATE DRAWN | 08/14/2024 | | TR49 |

Tekla structures

# BILL OF MATERIAL

| MARK | QTY | DESCRIPTION | LENGTH | WEIGHT | REMARKS |
|---|---|---|---|---|---|
| TR50 | 1 | TRUSS | | | SQ-2 |
| BC47 | 1 | 350S162-43 | 35'-9 1/2" | 40.68 | A913-GR.50 |
| P20 | 2 | 350S162-43 | 3'-9 1/8" | 8.55 | A913-GR.50 |
| PL29 | 8 | PL0.0430X3.0000 | 0'-6" | 1.76 | A36 |
| PL30 | 2 | PL0.0430X3.0000 | 0'-10" | 0.73 | A36 |
| R5 | 2 | 350S162-43 | 26'-9 7/16" | 60.89 | A913-GR.50 |
| TC47 | 1 | 350S162-43 | 3'-9 3/16" | 4.28 | A913-GR.50 |
| TC87 | 1 | 350S162-43 | 35'-9 9/16" | 40.69 | A913-GR.50 |
| W86 | 1 | 350S162-43 | 1'-7 1/4" | 1.82 | A913-GR.50 |
| W96 | 1 | 350S162-43 | 2'-2 3/8" | 2.50 | A913-GR.50 |
| W97 | 1 | 350S162-43 | 1'-6 1/4" | 1.73 | A913-GR.50 |
| W101 | 1 | 350S162-43 | 2'-0 5/8" | 2.34 | A913-GR.50 |
| W109 | 1 | 350S162-43 | 1'-4 7/8" | 1.60 | A913-GR.50 |
| W140 | 1 | 350S162-43 | 1'-5 13/16" | 1.69 | A913-GR.50 |
| W147 | 1 | 350S162-43 | 1'-8 5/8" | 1.96 | A913-GR.50 |
| W151 | 1 | 350S162-43 | 2'-1 1/2" | 2.41 | A913-GR.50 |
| W178 | 1 | 350S162-43 | 2'-1 5/8" | 2.43 | A913-GR.50 |
| W209 | 1 | 350S162-43 | 2'-4 1/4" | 2.67 | A913-GR.50 |
| W210 | 1 | 350S162-43 | 2'-3 5/8" | 2.62 | A913-GR.50 |
| W211 | 1 | 350S162-43 | 2'-3 5/16" | 2.59 | A913-GR.50 |
| W230 | 1 | 350S162-43 | 2'-0 7/8" | 2.35 | A913-GR.50 |
| W244 | 1 | 350S162-43 | 1'-3 15/16" | 1.51 | A913-GR.50 |
| W249 | 1 | 350S162-43 | 2'-2 11/16" | 2.53 | A913-GR.50 |
| W250 | 1 | 350S162-43 | 2'-1 3/4" | 2.44 | A913-GR.50 |
| W294 | 1 | 350S162-43 | 1'-7 11/16" | 1.87 | A913-GR.50 |
| W297 | 1 | 350S162-43 | 2'-2 1/16" | 2.47 | A913-GR.50 |
| W300 | 1 | 350S162-43 | 2'-3" | 2.56 | A913-GR.50 |
| W302 | 1 | 350S162-43 | 1'-6 3/4" | 1.78 | A913-GR.50 |
| W304 | 1 | 350S162-43 | 1'-5 5/16" | 1.64 | A913-GR.50 |
| W305 | 1 | 350S162-43 | 1'-4 3/8" | 1.55 | A913-GR.50 |
| W322 | 1 | 350S162-43 | 1'-9 15/16" | 2.08 | A913-GR.50 |
| W372 | 1 | 350S162-43 | 1'-9 5/8" | 2.05 | A913-GR.50 |
| W375 | 1 | 350S150-43 | 5'-0 3/8" | 5.31 | A913-GR.50 |
| W376 | 1 | 350S162-43 | 2'-0 5/8" | 2.33 | A913-GR.50 |
| W378 | 1 | 350S162-43 | 1'-11 7/16" | 2.22 | A913-GR.50 |
| W386 | 1 | 350S162-43 | 1'-10 15/16" | 2.17 | A913-GR.50 |
| W408 | 1 | 350S162-43 | 1'-8 3/16" | 1.91 | A913-GR.50 |
| W440 | 1 | 350S162-43 | 2'-5 1/16" | 2.75 | A913-GR.50 |
| W471 | 1 | 350S162-43 | 2'-0 9/16" | 2.33 | A913-GR.50 |
| W472 | 1 | 350S162-43 | 1'-2 1/2" | 1.37 | A913-GR.50 |
| W491 | 1 | 350S162-43 | 1'-3 3/16" | 1.44 | A913-GR.50 |
| W541 | 1 | 350S162-43 | 1'-3 3/16" | 1.44 | A913-GR.50 |
| W552 | 1 | 350S162-43 | 1'-3 7/16" | 1.46 | A913-GR.50 |
| W591 | 1 | 350S162-43 | 1'-10 7/16" | 2.13 | A913-GR.50 |
| W595 | 1 | 350S162-43 | 1'-10 3/4" | 2.15 | A913-GR.50 |
| W631 | 1 | 350S162-43 | 2'-5 7/8" | 2.83 | A913-GR.50 |
| p36 | 2 | PL0.0430X3.0259 | 0'-3 1/2" | 0.26 | A36 |
| p43 | 2 | PL0.0430X7.7602 | 2'-5 1/16" | 5.06 | A36 |
| p45 | 2 | PL0.0430X7.7484 | 1'-11 3/16" | 3.97 | A36 |
| | | TOTAL WEIGHT THIS DRAWING | | 250 | |

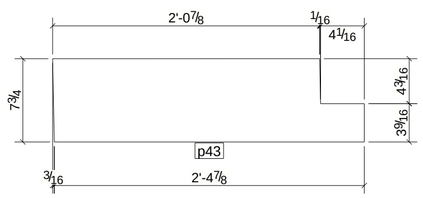


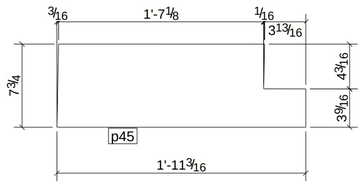


FRONT VIEW

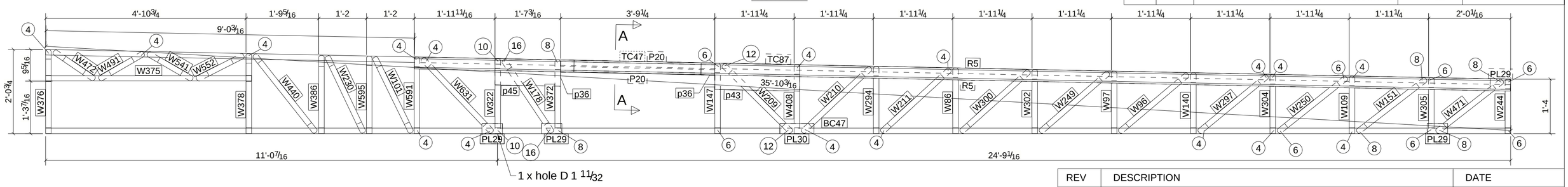


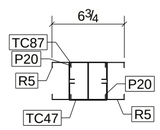


A - A

NOTES
1. NUMBER IN CIRCLE INDICATES THE TOTAL AMOUNT OF SCREWS PER CONNECTION ON BOTH SIDES.
2. INSTALL 1 SCREW ON EACH SIDE OF TRUSS UNLESS NOTED OTHERWISE

| REV | DESCRIPTION | DATE |
|---|---|---|
| | | |

| | | | |
|---|---|---|---|
| DESCRIPTION | | | |
| PROJECT NAME | | | |
| DRAWN BY | | JOB No. | DRG No. |
| DATE DRAWN | 08/14/2024 | | TR50 |

Tekla structures

# BILL OF MATERIAL

| MARK | QTY | DESCRIPTION | LENGTH | WEIGHT | REMARKS |
|---|---|---|---|---|---|
| TR51 | 7 | TRUSSES | | | SQ-2 |
| BC26 | 7 | 350S162-43 | 35'-9 1/2" | 284.78 | A913-GR.50 |
| P20 | 14 | 350S162-43 | 3'-9 1/8" | 59.86 | A913-GR.50 |
| PL29 | 42 | PL0.0430X3.0000 | 0'-6" | 9.22 | A36 |
| PL30 | 14 | PL0.0430X3.0000 | 0'-10" | 5.12 | A36 |
| R1 | 14 | 350S162-43 | 27'-3 3/8" | 434.11 | A913-GR.50 |
| TC44 | 7 | 350S162-43 | 35'-9 9/16" | 284.84 | A913-GR.50 |
| TC47 | 7 | 350S162-43 | 3'-9 3/16" | 29.97 | A913-GR.50 |
| W86 | 7 | 350S162-43 | 1'-7 1/4" | 12.75 | A913-GR.50 |
| W96 | 7 | 350S162-43 | 2'-2 3/8" | 17.49 | A913-GR.50 |
| W97 | 7 | 350S162-43 | 1'-6 1/4" | 12.12 | A913-GR.50 |
| W109 | 7 | 350S162-43 | 1'-4 7/8" | 11.18 | A913-GR.50 |
| W140 | 7 | 350S162-43 | 1'-5 13/16" | 11.81 | A913-GR.50 |
| W147 | 7 | 350S162-43 | 1'-8 5/8" | 13.69 | A913-GR.50 |
| W151 | 7 | 350S162-43 | 2'-1 1/2" | 16.90 | A913-GR.50 |
| W209 | 7 | 350S162-43 | 2'-4 1/4" | 18.71 | A913-GR.50 |
| W210 | 7 | 350S162-43 | 2'-3 5/8" | 18.33 | A913-GR.50 |
| W211 | 7 | 350S162-43 | 2'-3 5/16" | 18.12 | A913-GR.50 |
| W244 | 7 | 350S162-43 | 1'-3 15/16" | 10.56 | A913-GR.50 |
| W249 | 7 | 350S162-43 | 2'-2 11/16" | 17.69 | A913-GR.50 |
| W250 | 7 | 350S162-43 | 2'-1 3/4" | 17.08 | A913-GR.50 |
| W294 | 7 | 350S162-43 | 1'-7 11/16" | 13.06 | A913-GR.50 |
| W297 | 7 | 350S162-43 | 2'-2 1/16" | 17.27 | A913-GR.50 |
| W300 | 7 | 350S162-43 | 2'-3" | 17.89 | A913-GR.50 |
| W302 | 7 | 350S162-43 | 1'-6 3/4" | 12.43 | A913-GR.50 |
| W304 | 7 | 350S162-43 | 1'-5 5/16" | 11.49 | A913-GR.50 |
| W305 | 7 | 350S162-43 | 1'-4 3/8" | 10.86 | A913-GR.50 |
| W372 | 7 | 350S162-43 | 1'-9 5/8" | 14.32 | A913-GR.50 |
| W375 | 7 | 350S150-43 | 5'-0 3/8" | 37.15 | A913-GR.50 |
| W376 | 7 | 350S162-43 | 2'-0 5/8" | 16.34 | A913-GR.50 |
| W378 | 7 | 350S162-43 | 1'-11 7/16" | 15.55 | A913-GR.50 |
| W386 | 7 | 350S162-43 | 1'-10 15/16" | 15.20 | A913-GR.50 |
| W388 | 7 | 350S162-43 | 1'-10 1/16" | 14.64 | A913-GR.50 |
| W408 | 7 | 350S162-43 | 1'-8 3/16" | 13.38 | A913-GR.50 |
| W426 | 7 | 350S162-43 | 1'-10 9/16" | 14.96 | A913-GR.50 |
| W440 | 7 | 350S162-43 | 2'-5 1/16" | 19.28 | A913-GR.50 |
| W467 | 7 | 350S162-43 | 2'-5 1/8" | 19.33 | A913-GR.50 |
| W468 | 7 | 350S162-43 | 2'-5 13/16" | 19.75 | A913-GR.50 |
| W469 | 7 | 350S162-43 | 2'-5 7/16" | 19.52 | A913-GR.50 |
| W471 | 7 | 350S162-43 | 2'-0 9/16" | 16.30 | A913-GR.50 |
| W472 | 7 | 350S162-43 | 1'-2 1/2" | 9.62 | A913-GR.50 |
| W491 | 7 | 350S162-43 | 1'-3 3/16" | 10.07 | A913-GR.50 |
| W541 | 7 | 350S162-43 | 1'-3 3/16" | 10.06 | A913-GR.50 |
| W552 | 7 | 350S162-43 | 1'-3 7/16" | 10.25 | A913-GR.50 |
| p36 | 14 | PL0.0430X3.0259 | 0'-3 1/2" | 1.80 | A36 |
| p38 | 14 | PL0.0430X7.7484 | 2'-5 3/16" | 35.74 | A36 |
| p43 | 14 | PL0.0430X7.7602 | 2'-5 1/16" | 35.42 | A36 |
| | | TOTAL WEIGHT THIS DRAWING | | 1736 | |

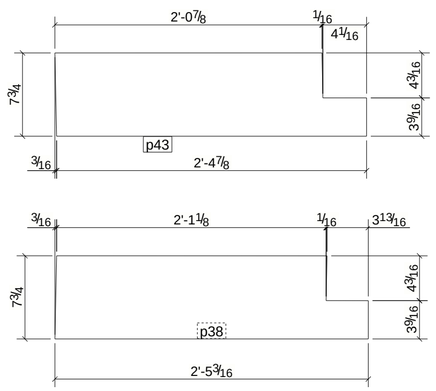


FRONT VIEW

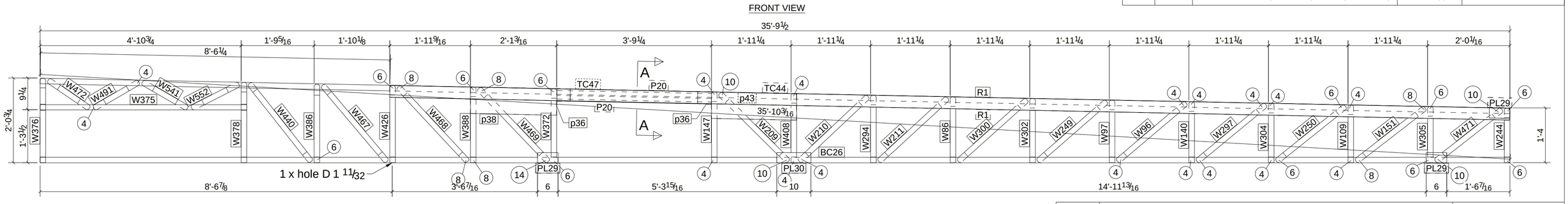


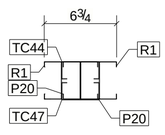


A - A

NOTES
1. NUMBER IN CIRCLE INDICATES THE TOTAL AMOUNT OF SCREWS PER CONNECTION ON BOTH SIDES.
2. INSTALL 1 SCREW ON EACH SIDE OF TRUSS UNLESS NOTED OTHERWISE

| REV | DESCRIPTION | DATE |
|---|---|---|
| | | |

| | | | |
|---|---|---|---|
| DESCRIPTION | | | |
| PROJECT NAME | | | |
| DRAWN BY | | JOB No. | DRG No. |
| DATE DRAWN | 08/14/2024 | | TR51 |

Tekla structures

# BILL OF MATERIAL

| MARK | QTY | DESCRIPTION | LENGTH | WEIGHT | REMARKS |
|---|---|---|---|---|---|
| TR52 | 1 | TRUSS | | | SQ-2 |
| BC84 | 1 | 350S162-43 | 35'-9 1/2" | 40.68 | A913-GR.50 |
| PL27 | 2 | PL0.0430X3.0000 | 0'-8" | 0.59 | A36 |
| PL28 | 2 | PL0.0430X3.0000 | 0'-5 3/16" | 0.38 | A36 |
| PL29 | 18 | PL0.0430X3.0000 | 0'-6" | 3.95 | A36 |
| TC78 | 1 | 350S162-43 | 35'-9 9/16" | 40.69 | A913-GR.50 |
| W245 | 1 | 350S162-43 | 2'-3 1/2" | 2.60 | A913-GR.50 |
| W246 | 1 | 350S162-43 | 2'-3 11/16" | 2.62 | A913-GR.50 |
| W332 | 1 | 350S162-43 | 2'-2 7/16" | 2.50 | A913-GR.50 |
| W358 | 1 | 350S162-43 | 2'-3 3/8" | 2.59 | A913-GR.50 |
| W359 | 1 | 350S162-43 | 2'-3 1/16" | 2.56 | A913-GR.50 |
| W360 | 1 | 350S162-43 | 2'-2 3/4" | 2.53 | A913-GR.50 |
| W361 | 1 | 350S162-43 | 2'-0 7/8" | 2.36 | A913-GR.50 |
| W362 | 1 | 350S162-43 | 2'-0 5/8" | 2.33 | A913-GR.50 |
| W368 | 1 | 350S162-43 | 1'-10 3/16" | 2.10 | A913-GR.50 |
| W519 | 1 | 350S162-43 | 2'-1 1/2" | 2.41 | A913-GR.50 |
| W521 | 1 | 350S162-43 | 2'-1 3/16" | 2.39 | A913-GR.50 |
| W555 | 1 | 350S162-43 | 1'-9 1/16" | 2.00 | A913-GR.50 |
| W556 | 1 | 350S162-43 | 1'-8 5/8" | 1.96 | A913-GR.50 |
| W557 | 1 | 350S162-43 | 1'-8 3/16" | 1.91 | A913-GR.50 |
| W558 | 1 | 350S162-43 | 1'-7 3/4" | 1.87 | A913-GR.50 |
| W559 | 1 | 350S162-43 | 1'-7 5/16" | 1.83 | A913-GR.50 |
| W560 | 1 | 350S162-43 | 1'-6 13/16" | 1.78 | A913-GR.50 |
| W563 | 1 | 350S162-43 | 1'-6 3/8" | 1.74 | A913-GR.50 |
| W564 | 1 | 350S162-43 | 1'-5 15/16" | 1.70 | A913-GR.50 |
| W565 | 1 | 350S162-43 | 1'-5 1/2" | 1.66 | A913-GR.50 |
| W566 | 1 | 350S162-43 | 1'-5 1/8" | 1.62 | A913-GR.50 |
| W567 | 1 | 350S162-43 | 1'-4 11/16" | 1.58 | A913-GR.50 |
| W568 | 1 | 350S162-43 | 1'-4 1/4" | 1.54 | A913-GR.50 |
| W569 | 1 | 350S162-43 | 1'-3 13/16" | 1.50 | A913-GR.50 |
| W570 | 1 | 350S162-43 | 1'-3 3/8" | 1.46 | A913-GR.50 |
| W571 | 1 | 350S162-43 | 1'-2 15/16" | 1.41 | A913-GR.50 |
| W572 | 1 | 350S162-43 | 1'-2 1/2" | 1.37 | A913-GR.50 |
| W573 | 1 | 350S162-43 | 1'-2 1/16" | 1.33 | A913-GR.50 |
| W574 | 1 | 350S162-43 | 1'-1 5/8" | 1.29 | A913-GR.50 |
| W575 | 1 | 350S162-43 | 1'-1 3/16" | 1.25 | A913-GR.50 |
| W576 | 1 | 350S162-43 | 1'-0 3/4" | 1.21 | A913-GR.50 |
| W577 | 1 | 350S162-43 | 1'-0 3/8" | 1.17 | A913-GR.50 |
| W578 | 1 | 350S162-43 | 1'-11 7/8" | 2.26 | A913-GR.50 |
| W579 | 1 | 350S162-43 | 1'-11 9/16" | 2.23 | A913-GR.50 |
| W580 | 1 | 350S162-43 | 1'-11 5/16" | 2.21 | A913-GR.50 |
| W581 | 1 | 350S162-43 | 1'-11 1/16" | 2.19 | A913-GR.50 |
| W582 | 1 | 350S162-43 | 1'-10 7/8" | 2.16 | A913-GR.50 |
| W583 | 1 | 350S162-43 | 1'-10 5/8" | 2.14 | A913-GR.50 |
| W584 | 1 | 350S162-43 | 1'-10 3/8" | 2.12 | A913-GR.50 |
| W587 | 1 | 350S162-43 | 2'-0 1/8" | 2.28 | A913-GR.50 |
| W588 | 1 | 350S162-43 | 1'-9 5/16" | 2.02 | A913-GR.50 |
| | | TOTAL WEIGHT THIS DRAWING | | 166 | |

FRONT VIEW

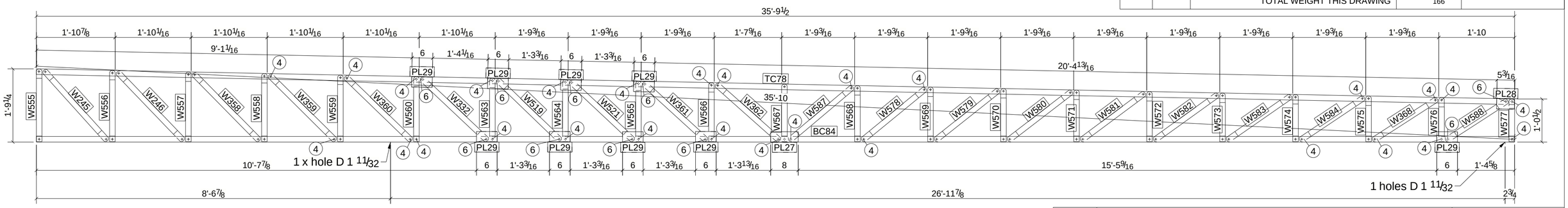


NOTES
1. NUMBER IN CIRCLE INDICATES THE TOTAL
   AMOUNT OF SCREWS PER CONNECTION ON BOTH SIDES.
2. INSTALL 1 SCREW ON EACH SIDE OF TRUSS UNLESS NOTED OTHERWISE

| REV | DESCRIPTION | DATE |
|---|---|---|
| | | |

| | | | |
|---|---|---|---|
| DESCRIPTION | | | |
| PROJECT NAME | | | |
| DRAWN BY | | JOB No. | DRG No. |
| DATE DRAWN | 08/14/2024 | | TR52 |

Tekla structures

# BILL OF MATERIAL

| MARK | QTY | DESCRIPTION | LENGTH | WEIGHT | REMARKS |
|---|---|---|---|---|---|
| TR53 | 1 | BOTTOM CHORD | | | SQ-2 |
| BC44 | 1 | 350S162-43 | 35'-9 1/2" | 40.683 | A913-GR.50 |
| PL29 | 8 | PL0.0430X3.0000 | 0'-6" | 1.756 | A36 |
| TC41 | 1 | 350S162-43 | 35'-9 9/16" | 40.692 | A913-GR.50 |
| W245 | 1 | 350S162-43 | 2'-3 1/2" | 2.602 | A913-GR.50 |
| W246 | 1 | 350S162-43 | 2'-3 11/16" | 2.620 | A913-GR.50 |
| W332 | 1 | 350S162-43 | 2'-2 7/16" | 2.503 | A913-GR.50 |
| W337 | 1 | 350S162-43 | 1'-9 1/16" | 1.996 | A913-GR.50 |
| W338 | 1 | 350S162-43 | 1'-8 5/8" | 1.955 | A913-GR.50 |
| W339 | 1 | 350S162-43 | 1'-8 3/16" | 1.913 | A913-GR.50 |
| W340 | 1 | 350S162-43 | 1'-7 3/4" | 1.870 | A913-GR.50 |
| W341 | 1 | 350S162-43 | 1'-7 5/16" | 1.827 | A913-GR.50 |
| W342 | 1 | 350S162-43 | 1'-6 13/16" | 1.785 | A913-GR.50 |
| W343 | 1 | 350S162-43 | 1'-6 3/8" | 1.742 | A913-GR.50 |
| W344 | 1 | 350S162-43 | 1'-5 15/16" | 1.701 | A913-GR.50 |
| W345 | 1 | 350S162-43 | 1'-5 1/2" | 1.660 | A913-GR.50 |
| W346 | 1 | 350S162-43 | 1'-5 1/8" | 1.619 | A913-GR.50 |
| W347 | 1 | 350S162-43 | 1'-4 11/16" | 1.578 | A913-GR.50 |
| W348 | 1 | 350S162-43 | 1'-4 1/4" | 1.537 | A913-GR.50 |
| W349 | 1 | 350S162-43 | 1'-3 13/16" | 1.496 | A913-GR.50 |
| W350 | 1 | 350S162-43 | 1'-3 3/8" | 1.456 | A913-GR.50 |
| W351 | 1 | 350S162-43 | 1'-2 15/16" | 1.415 | A913-GR.50 |
| W352 | 1 | 350S162-43 | 1'-2 1/2" | 1.374 | A913-GR.50 |
| W353 | 1 | 350S162-43 | 1'-2 1/16" | 1.333 | A913-GR.50 |
| W354 | 1 | 350S162-43 | 1'-1 5/8" | 1.292 | A913-GR.50 |
| W355 | 1 | 350S162-43 | 1'-1 3/16" | 1.251 | A913-GR.50 |
| W356 | 1 | 350S162-43 | 1'-0 3/4" | 1.210 | A913-GR.50 |
| W357 | 1 | 350S162-43 | 1'-0 3/8" | 1.171 | A913-GR.50 |
| W358 | 1 | 350S162-43 | 2'-3 3/8" | 2.590 | A913-GR.50 |
| W359 | 1 | 350S162-43 | 2'-3 1/16" | 2.561 | A913-GR.50 |
| W360 | 1 | 350S162-43 | 2'-2 3/4" | 2.532 | A913-GR.50 |
| W361 | 1 | 350S162-43 | 2'-0 7/8" | 2.359 | A913-GR.50 |
| W362 | 1 | 350S162-43 | 2'-0 5/8" | 2.332 | A913-GR.50 |
| W363 | 1 | 350S162-43 | 1'-11 1/4" | 2.203 | A913-GR.50 |
| W364 | 1 | 350S162-43 | 1'-11" | 2.181 | A913-GR.50 |
| W365 | 1 | 350S162-43 | 1'-10 13/16" | 2.159 | A913-GR.50 |
| W366 | 1 | 350S162-43 | 1'-10 9/16" | 2.137 | A913-GR.50 |
| W367 | 1 | 350S162-43 | 1'-10 3/8" | 2.117 | A913-GR.50 |
| W368 | 1 | 350S162-43 | 1'-10 1/8" | 2.098 | A913-GR.50 |
| W369 | 1 | 350S162-43 | 1'-9 5/16" | 2.018 | A913-GR.50 |
| W519 | 1 | 350S162-43 | 2'-1 1/2" | 2.413 | A913-GR.50 |
| W521 | 1 | 350S162-43 | 2'-1 3/16" | 2.386 | A913-GR.50 |
| W542 | 1 | 350S162-43 | 2'-0" | 2.275 | A913-GR.50 |
| W543 | 1 | 350S162-43 | 1'-11 3/4" | 2.251 | A913-GR.50 |
| W554 | 1 | 350S162-43 | 1'-11 1/2" | 2.227 | A913-GR.50 |
| | | TOTAL WEIGHT THIS DRAWING | | 163 | |

FRONT VIEW

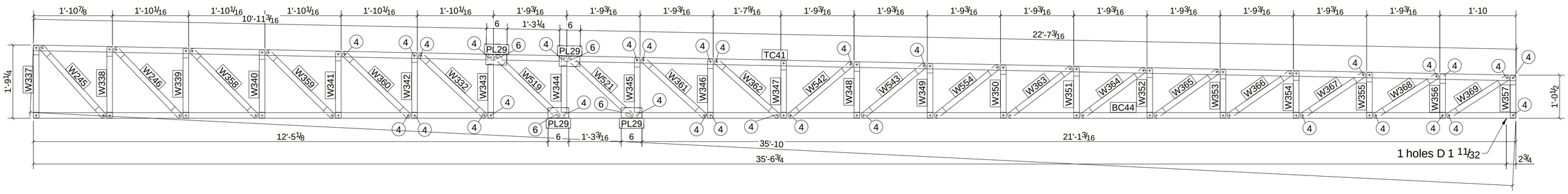


NOTES
1. NUMBER IN CIRCLE INDICATES THE TOTAL
   AMOUNT OF SCREWS PER CONNECTION ON BOTH SIDES.
2. INSTALL 1 SCREW ON EACH SIDE OF TRUSS UNLESS NOTED OTHERWISE

| REV | DESCRIPTION | DATE |
|---|---|---|
| | | |

| | | | |
|---|---|---|---|
| DESCRIPTION | | | |
| PROJECT NAME | | | |
| DRAWN BY | | JOB No. | DRG No. |
| DATE DRAWN | 07/01/2024 | . | TR53 |

Tekla structures

# BILL OF MATERIAL

| MARK | QTY | DESCRIPTION | LENGTH | WEIGHT | REMARKS |
|---|---|---|---|---|---|
| TR54 | 1 | TRUSS | | | SQ-2 |
| P24 | 1 | 350S162-43 | 1'-8 1/2" | 1.94 | A913-GR.50 |
| P2 | 2 | 350S162-43 | 0'-3 1/4" | 0.62 | A913-GR.50 |
| P11 | 1 | 350S162-43 | 1'-6 7/16" | 1.75 | A913-GR.50 |
| P18 | 1 | 350S162-43 | 0'-5 1/16" | 0.48 | A913-GR.50 |
| P45 | 1 | 350S162-43 | 1'-6 5/16" | 1.74 | A913-GR.50 |
| P46 | 1 | 350S162-43 | 2'-1 11/16" | 2.43 | A913-GR.50 |
| P68 | 1 | 350S162-43 | 1'-5 1/4" | 1.63 | A913-GR.50 |
| P80 | 1 | 350S162-43 | 0'-5 3/16" | 0.49 | A913-GR.50 |
| | | TOTAL WEIGHT THIS DRAWING | | 11 | |

FRONT VIEW

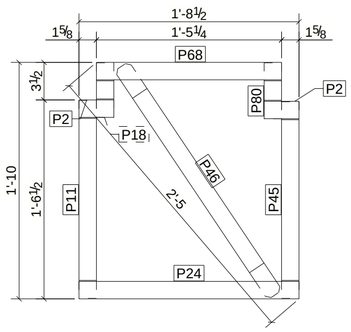


NOTES
1. NUMBER IN CIRCLE INDICATES THE TOTAL
   AMOUNT OF SCREWS PER CONNECTION ON BOTH SIDES.
2. INSTALL 1 SCREW ON EACH SIDE OF TRUSS UNLESS NOTED OTHERWISE

| REV | DESCRIPTION | DATE |
|---|---|---|
| | | |

| | | | |
|---|---|---|---|
| DESCRIPTION | | | |
| PROJECT NAME | | | |
| DRAWN BY | | JOB No. | DRG No. |
| DATE DRAWN | 07/16/2024 | | TR54 |

Tekla structures

# BILL OF MATERIAL

| MARK | QTY | DESCRIPTION | LENGTH | WEIGHT | REMARKS |
|---|---|---|---|---|---|
| TR55 | 1 | TRUSS | | | SQ-2 |
| P1 | 1 | 350S162-43 | 1'-10 5/16" | 2.11 | A913-GR.50 |
| P3 | 1 | 350S162-43 | 1'-4" | 1.51 | A913-GR.50 |
| P12 | 1 | 350S162-43 | 1'-8 7/16" | 1.94 | A913-GR.50 |
| P31 | 1 | 350S162-43 | 1'-4" | 1.51 | A913-GR.50 |
| P89 | 1 | 350S162-43 | 1'-8 7/16" | 1.94 | A913-GR.50 |
| | | TOTAL WEIGHT THIS DRAWING | | 9 | |

FRONT VIEW

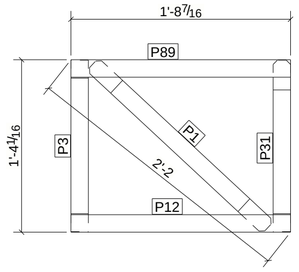


NOTES
1. NUMBER IN CIRCLE INDICATES THE TOTAL
   AMOUNT OF SCREWS PER CONNECTION ON BOTH SIDES.
2. INSTALL 1 SCREW ON EACH SIDE OF TRUSS UNLESS NOTED OTHERWISE

| REV | DESCRIPTION | DATE |
|---|---|---|
| | | |

| | | | |
|---|---|---|---|
| DESCRIPTION | | | |
| PROJECT NAME | | | |
| DRAWN BY | | JOB No. | DRG No. |
| DATE DRAWN | 07/16/2024 | | TR55 |

Tekla structures

# BILL OF MATERIAL

| MARK | QTY | DESCRIPTION | LENGTH | WEIGHT | REMARKS |
|---|---|---|---|---|---|
| TR56 | 1 | TRUSS | | | SQ-1/BEV-1 |
| P48 | 1 | 350S162-43 | 1'-9 7/8" | 2.07 | A913-GR.50 |
| P3 | 1 | 350S162-43 | 1'-4" | 1.51 | A913-GR.50 |
| P5 | 1 | 350S162-43 | 1'-7 1/2" | 1.85 | A913-GR.50 |
| P6 | 1 | 350S162-43 | 1'-4" | 1.51 | A913-GR.50 |
| P47 | 1 | 350S162-43 | 1'-7 1/2" | 1.85 | A913-GR.50 |
| | | TOTAL WEIGHT THIS DRAWING | | 9 | |

FRONT VIEW

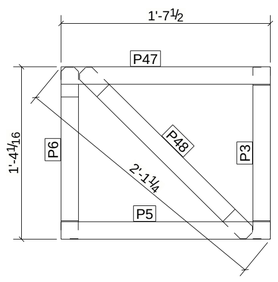


NOTES
1. NUMBER IN CIRCLE INDICATES THE TOTAL
   AMOUNT OF SCREWS PER CONNECTION ON BOTH SIDES.
2. INSTALL 1 SCREW ON EACH SIDE OF TRUSS UNLESS NOTED OTHERWISE

| REV | DESCRIPTION | DATE |
|---|---|---|
| | | |

| | | | |
|---|---|---|---|
| DESCRIPTION | | | |
| PROJECT NAME | | | |
| DRAWN BY | | JOB No. | DRG No. |
| DATE DRAWN | 07/18/2024 | | TR56 |

Tekla structures

# BILL OF MATERIAL

| MARK | QTY | DESCRIPTION | LENGTH | WEIGHT | REMARKS |
|---|---|---|---|---|---|
| TR57 | 1 | TRUSS | | | SQ-1/BEV-1 |
| P32 | 1 | 350S162-43 | 1'-10 1/2" | 2.13 | A913-GR.50 |
| P4 | 1 | 350S162-43 | 1'-8 1/2" | 1.94 | A913-GR.50 |
| P16 | 1 | 350S162-43 | 1'-8 1/2" | 1.94 | A913-GR.50 |
| P31 | 2 | 350S162-43 | 1'-4" | 3.03 | A913-GR.50 |
| | | TOTAL WEIGHT THIS DRAWING | | 9 | |

FRONT VIEW

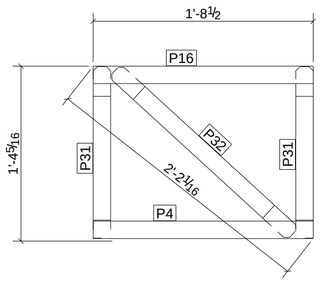


NOTES
1. NUMBER IN CIRCLE INDICATES THE TOTAL
   AMOUNT OF SCREWS PER CONNECTION ON BOTH SIDES.
2. INSTALL 1 SCREW ON EACH SIDE OF TRUSS UNLESS NOTED OTHERWISE

| REV | DESCRIPTION | DATE |
|---|---|---|
| | | |

| | | | |
|---|---|---|---|
| DESCRIPTION | | | |
| PROJECT NAME | | | |
| DRAWN BY | | JOB No. | DRG No. |
| DATE DRAWN | 07/16/2024 | | TR57 |

Tekla structures

FRONT VIEW

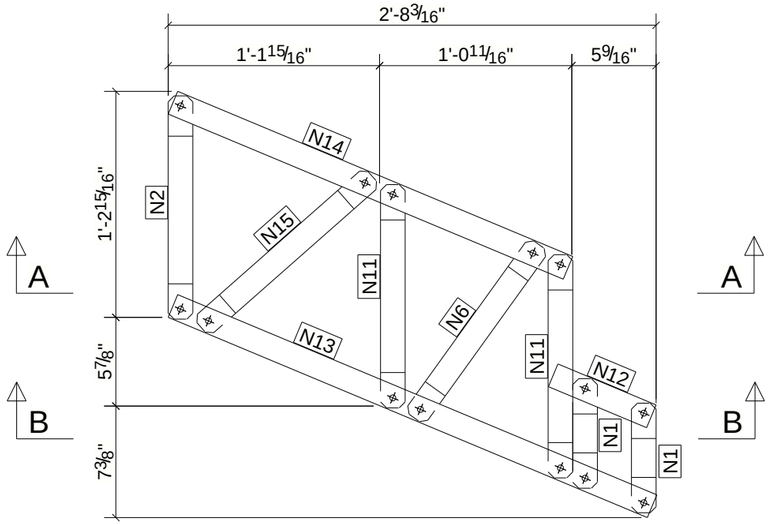


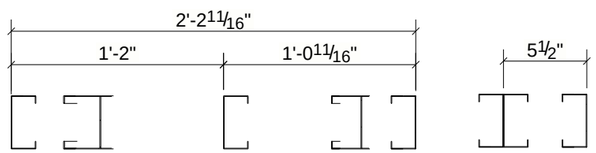


A - A

B - B

# BILL OF MATERIAL

| MARK | QTY | DESCRIPTION | LENGTH | WEIGHT | REMARKS |
|---|---|---|---|---|---|
| TR58 | 4 | TRUSSES | | | SQ-2 |
| N11 | 4 | 350S162-43 | 1'-2 3/4" | 5.58 | A913-GR.50 |
| N1 | 8 | 350S162-43 | 0'-7 1/4" | 5.48 | A913-GR.50 |
| N2 | 4 | 350S162-43 | 1'-2 3/4" | 5.58 | A913-GR.50 |
| N6 | 4 | 350S162-43 | 1'-2 1/16" | 5.34 | A913-GR.50 |
| N11 | 4 | 350S162-43 | 1'-2 3/4" | 5.58 | A913-GR.50 |
| N12 | 4 | 350S162-43 | 0'-7" | 2.66 | A913-GR.50 |
| N13 | 4 | 350S162-43 | 2'-10 1/4" | 12.98 | A913-GR.50 |
| N14 | 4 | 350S162-43 | 2'-4 1/4" | 10.71 | A913-GR.50 |
| N15 | 4 | 350S162-43 | 1'-3 1/16" | 5.71 | A913-GR.50 |
| | | TOTAL WEIGHT THIS DRAWING | | 60 | |

| REV | DESCRIPTION | DATE |
|---|---|---|
| 1 | ROOF FRAMING UPDATE | 11/18/2024 |

| | | | |
|---|---|---|---|
| DESCRIPTION | | | |
| PROJECT NAME | | | |
| DRAWN BY | | JOB No. | DRG No. |
| DATE DRAWN | 11/18/2024 | | TR58 |

Tekla structures

# BILL OF MATERIAL

| MARK | QTY | DESCRIPTION | LENGTH | WEIGHT | REMARKS |
|---|---|---|---|---|---|
| TR59 | 3 | TRUSSES | | | SQ-2 |
| P7 | 3 | 350S162-43 | 1'-8 1/2" | 5.83 | A913-GR.50 |
| P7 | 3 | 350S162-43 | 1'-8 1/2" | 5.83 | A913-GR.50 |
| P43 | 6 | 350S162-43 | 1'-2 7/16" | 8.22 | A913-GR.50 |
| P44 | 3 | 350S162-43 | 1'-9 7/16" | 6.09 | A913-GR.50 |
| | | TOTAL WEIGHT THIS DRAWING | | 26 | |

FRONT VIEW

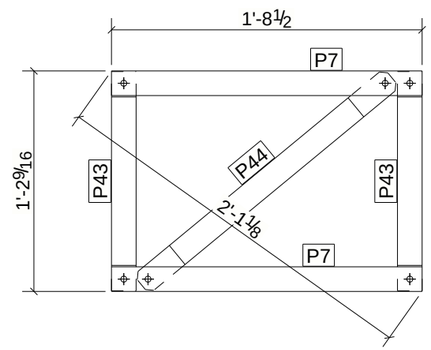


| REV | DESCRIPTION | DATE |
|---|---|---|
| | | |

| | | | |
|---|---|---|---|
| DESCRIPTION | | | |
| PROJECT NAME | | | |
| DRAWN BY | | JOB No. | DRG No. |
| DATE DRAWN | 07/16/2024 | | TR59 |

Tekla structures

# BILL OF MATERIAL

| MARK | QTY | DESCRIPTION | LENGTH | WEIGHT | REMARKS |
|---|---|---|---|---|---|
| TR60 | 1 | TRUSS | | | SQ-2 |
| BC16 | 1 | 350S162-43 | 19'-7 9/16" | 22.31 | A653-GR.50 |
| TC15 | 1 | 350S162-43 | 19'-7 9/16" | 22.31 | A653-GR.50 |
| W60 | 15 | 350S162-43 | 1'-2 5/16" | 20.30 | A653-GR.50 |
| W61 | 1 | 350S162-43 | 1'-6 7/8" | 1.79 | A653-GR.50 |
| W62 | 12 | 350S162-43 | 1'-7 7/16" | 22.09 | A653-GR.50 |
| W63 | 1 | 350S162-43 | 1'-5 5/8" | 1.67 | A653-GR.50 |
| | | TOTAL WEIGHT THIS DRAWING | | 90 | |

FRONT VIEW

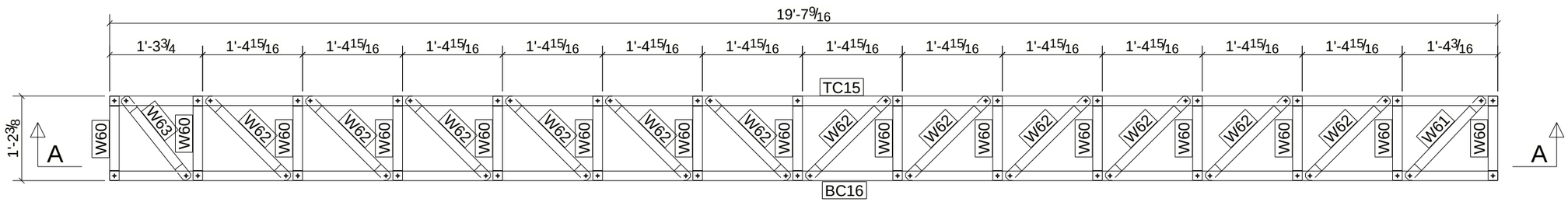


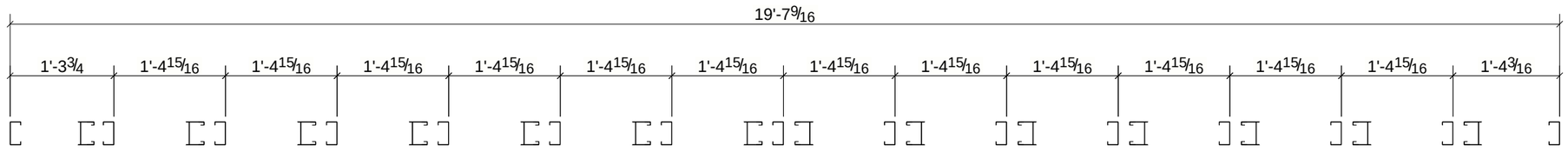


A - A

| REV | DESCRIPTION | DATE |
|---|---|---|
| | | |

| | | | |
|---|---|---|---|
| DESCRIPTION | | | |
| PROJECT NAME | | | |
| DRAWN BY | | JOB No. | DRG No. |
| DATE DRAWN | 07/18/2024 | | TR60 |

Tekla structures

# BILL OF MATERIAL

| MARK | QTY | DESCRIPTION | LENGTH | WEIGHT | REMARKS |
|---|---|---|---|---|---|
| TR61 | 20 | TRUSSES | | | SQ-2 |
| W56 | 20 | 350S162-33 | 1'-6 7/16" | 26.98 | A653-GR.50 |
| BC14 | 20 | 350S162-33 | 1'-0 1/2" | 18.29 | A653-GR.50 |
| BC15 | 20 | 350S162-33 | 0'-5 1/8" | 7.50 | A653-GR.50 |
| TC14 | 20 | 350S162-33 | 1'-4" | 23.41 | A653-GR.50 |
| W55 | 20 | 350S162-33 | 0'-8 15/16" | 13.07 | A653-GR.50 |
| W57 | 20 | 350S162-33 | 1'-6 7/16" | 26.98 | A653-GR.50 |
| W58 | 20 | 350S162-33 | 1'-7 9/16" | 28.67 | A653-GR.50 |
| | | TOTAL WEIGHT THIS DRAWING | | 145 | |

FRONT VIEW

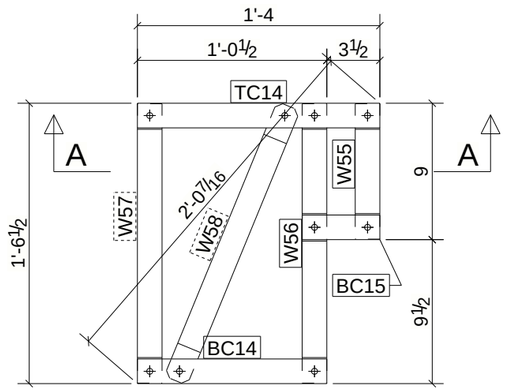


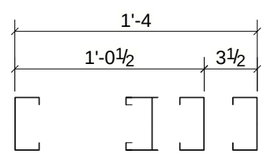


A - A

| REV | DESCRIPTION | DATE |
|---|---|---|
| | | |

| | | | |
|---|---|---|---|
| DESCRIPTION | | | |
| PROJECT NAME | | | |
| DRAWN BY | | JOB No. | DRG No. |
| DATE DRAWN | 07/18/2024 | | TR61 |

Tekla structures

# BILL OF MATERIAL

| MARK | QTY | DESCRIPTION | LENGTH | WEIGHT | REMARKS |
|---|---|---|---|---|---|
| TR62 | 1 | TRUSS | | | SQ-2 |
| BC11 | 1 | 550S162-43 | 29'-8" | 42.81 | A913-GR.50 |
| TC11 | 1 | 550S162-43 | 29'-8" | 42.81 | A913-GR.50 |
| W42 | 21 | 550S162-43 | 1'-2 7/16" | 36.40 | A913-GR.50 |
| W43 | 2 | 550S162-43 | 1'-7 9/16" | 4.71 | A913-GR.50 |
| W44 | 18 | 550S162-43 | 1'-8 1/8" | 43.57 | A913-GR.50 |
| | | TOTAL WEIGHT THIS DRAWING | | 170 | |

FRONT VIEW

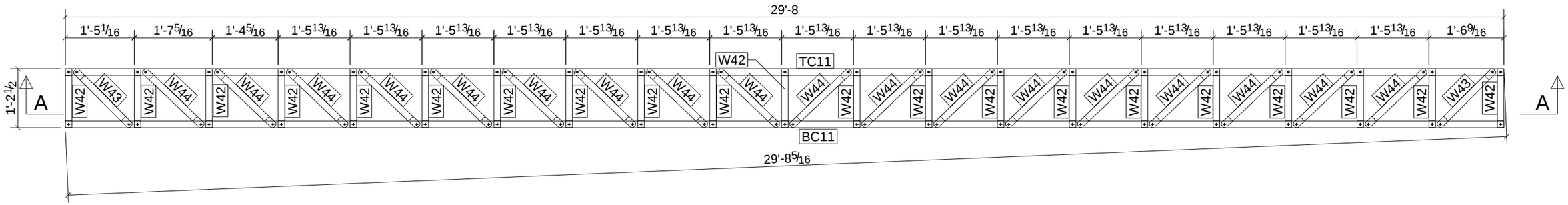


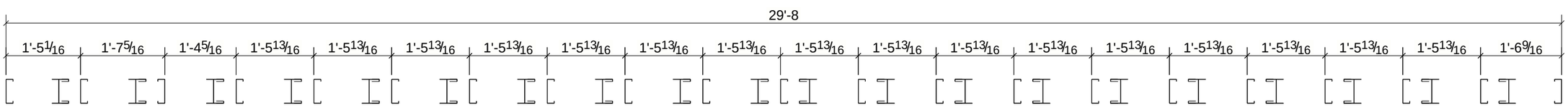


A - A

| REV | DESCRIPTION | DATE |
|---|---|---|
| | | |

| | | | |
|---|---|---|---|
| DESCRIPTION | | | |
| PROJECT NAME | | | |
| DRAWN BY | | JOB No. | DRG No. |
| DATE DRAWN | 07/15/2024 | | TR62 |

Tekla structures

# BILL OF MATERIAL

| MARK | QTY | DESCRIPTION | LENGTH | WEIGHT | REMARKS |
|---|---|---|---|---|---|
| TR63 | 1 | TRUSS | | | SQ-2 |
| BC13 | 1 | 550S162-43 | 29'-8" | 42.81 | A653-GR.50 |
| TC13 | 1 | 550S162-43 | 29'-8" | 42.81 | A653-GR.50 |
| W51 | 21 | 550S162-43 | 1'-3 15/16" | 40.19 | A653-GR.50 |
| W52 | 1 | 550S162-43 | 1'-8 5/8" | 2.48 | A653-GR.50 |
| W53 | 18 | 550S162-43 | 1'-9 3/16" | 45.82 | A653-GR.50 |
| W54 | 1 | 550S162-43 | 1'-8 11/16" | 2.49 | A653-GR.50 |
| | | TOTAL WEIGHT THIS DRAWING | | 177 | |

FRONT VIEW

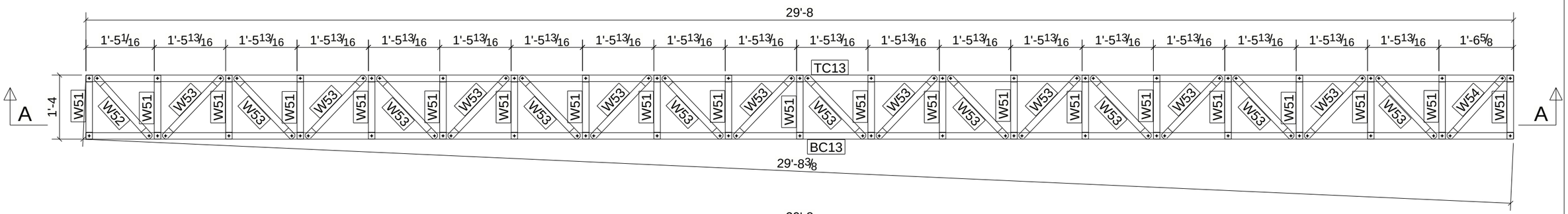


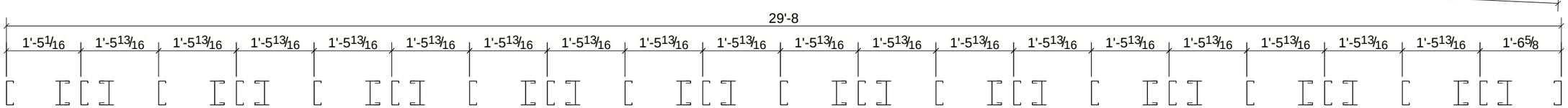


A - A

| REV | DESCRIPTION | DATE |
|---|---|---|
| | | |

| | | | |
|---|---|---|---|
| DESCRIPTION | | | |
| PROJECT NAME | | | |
| DRAWN BY | | JOB No. | DRG No. |
| DATE DRAWN | 07/15/2024 | | TR63 |

Tekla structures

# BILL OF MATERIAL

| MARK | QTY | DESCRIPTION | LENGTH | WEIGHT | REMARKS |
|---|---|---|---|---|---|
| TR64 | 1 | TRUSS | | | SQ-2 |
| BC12 | 1 | 350S162-43 | 29'-8" | 33.72 | A653-GR.50 |
| TC12 | 1 | 350S162-43 | 29'-8" | 33.72 | A653-GR.50 |
| W46 | 21 | 350S162-43 | 1'-0 7/16" | 24.69 | A653-GR.50 |
| W47 | 1 | 350S162-43 | 1'-6" | 1.71 | A653-GR.50 |
| W48 | 18 | 350S162-43 | 1'-6 5/8" | 31.71 | A653-GR.50 |
| W49 | 1 | 350S162-43 | 1'-6 1/16" | 1.71 | A653-GR.50 |
| | | TOTAL WEIGHT THIS DRAWING | | 127 | |

FRONT VIEW

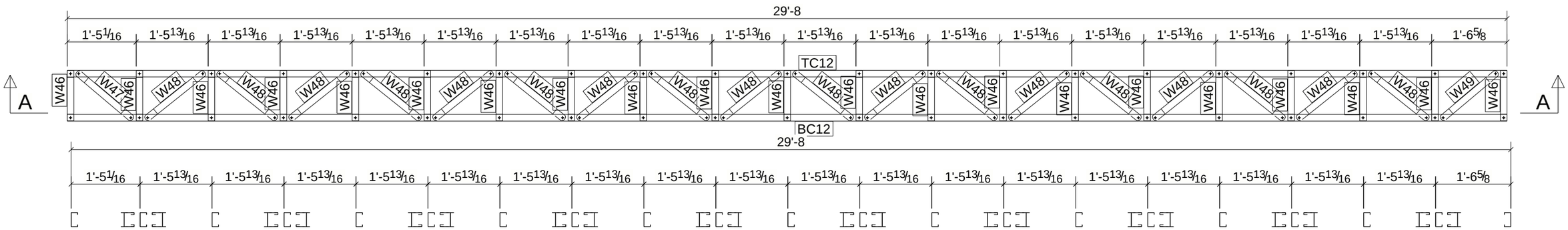


A - A

| REV | DESCRIPTION | DATE |
|---|---|---|
| | | |

| | | | |
|---|---|---|---|
| DESCRIPTION | | | |
| PROJECT NAME | | | |
| DRAWN BY | | JOB No. | DRG No. |
| DATE DRAWN | 07/18/2024 | | TR64 |

Tekla structures

# BILL OF MATERIAL

| MARK | QTY | DESCRIPTION | LENGTH | WEIGHT | REMARKS |
|---|---|---|---|---|---|
| TR65 | 1 | TRUSS | | | SQ-2 |
| BC9 | 1 | 550S162-43 | 29'-8" | 42.81 | A913-GR.50 |
| TC9 | 1 | 550S162-43 | 29'-8" | 42.81 | A913-GR.50 |
| W33 | 21 | 550S162-43 | 2'-3 7/16" | 69.23 | A913-GR.50 |
| W34 | 2 | 550S162-43 | 2'-6 1/4" | 7.28 | A913-GR.50 |
| W35 | 18 | 550S162-43 | 2'-6 9/16" | 66.21 | A913-GR.50 |
| | | TOTAL WEIGHT THIS DRAWING | | 228 | |

FRONT VIEW

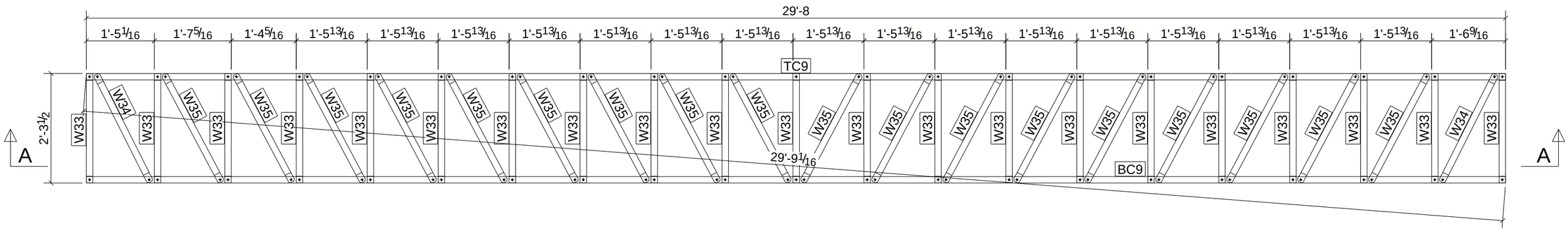


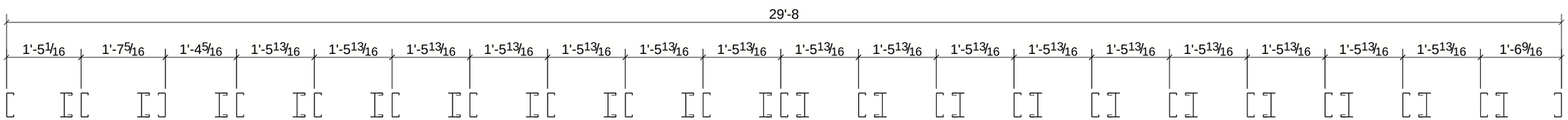


A - A

| REV | DESCRIPTION | DATE |
|---|---|---|
| | | |

| | | | |
|---|---|---|---|
| DESCRIPTION | | | |
| PROJECT NAME | | | |
| DRAWN BY | | JOB No. | DRG No. |
| DATE DRAWN | 07/15/2024 | | TR65 |

Tekla structures

# BILL OF MATERIAL

| MARK | QTY | DESCRIPTION | LENGTH | WEIGHT | REMARKS |
|---|---|---|---|---|---|
| TR66 | 2 | TRUSSES | | | SQ-2 |
| BC66 | 2 | 350S162-43 | 1'-8 1/2" | 3.88 | A913-GR.50 |
| TC54 | 2 | 350S162-43 | 1'-8 1/2" | 3.88 | A913-GR.50 |
| W443 | 2 | 350S162-43 | 2'-2 5/8" | 5.04 | A913-GR.50 |
| W525 | 4 | 350S162-43 | 1'-9 15/16" | 8.30 | A913-GR.50 |
| | | TOTAL WEIGHT THIS DRAWING | | 21 | |

FRONT VIEW

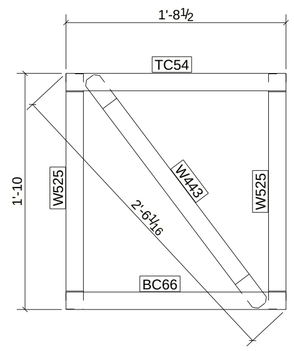


NOTES
1. NUMBER IN CIRCLE INDICATES THE TOTAL
   AMOUNT OF SCREWS PER CONNECTION ON BOTH SIDES.
2. INSTALL 1 SCREW ON EACH SIDE OF TRUSS UNLESS NOTED OTHERWISE

| REV | DESCRIPTION | DATE |
|---|---|---|
| | | |

| | | | |
|---|---|---|---|
| DESCRIPTION | | | |
| PROJECT NAME | | | |
| DRAWN BY | | JOB No. | DRG No. |
| DATE DRAWN | 07/16/2024 | | TR66 |

Tekla structures

# BILL OF MATERIAL

| MARK | QTY | DESCRIPTION | LENGTH | WEIGHT | REMARKS |
|---|---|---|---|---|---|
| TR67 | 26 | TRUSSES | | | SQ-2 |
| N8 | 26 | 350S162-43 | 1'-2 3/4" | 36.28 | A913-GR.50 |
| N1 | 52 | 350S162-43 | 0'-7 1/4" | 35.61 | A913-GR.50 |
| N2 | 26 | 350S162-43 | 1'-2 3/4" | 36.28 | A913-GR.50 |
| N3 | 26 | 350S162-43 | 0'-7" | 17.29 | A913-GR.50 |
| N4 | 26 | 350S162-43 | 1'-7 1/16" | 47.00 | A913-GR.50 |
| N5 | 26 | 350S162-43 | 1'-1 1/16" | 32.14 | A913-GR.50 |
| N6 | 26 | 350S162-43 | 1'-2 1/16" | 34.70 | A913-GR.50 |
| | | TOTAL WEIGHT THIS DRAWING | | 239 | |

1 1

FRONT VIEW

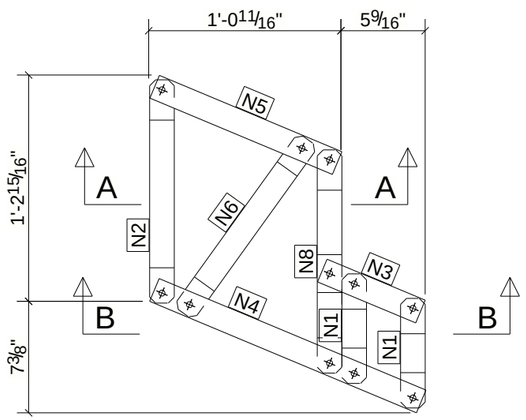


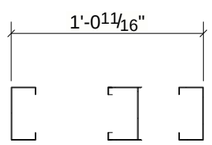


A - A

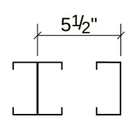


B - B

| REV | DESCRIPTION | DATE |
|---|---|---|
| 1 | ROOF FRAMING UPDATE | 11/18/2024 |

| | | | |
|---|---|---|---|
| DESCRIPTION | | | |
| PROJECT NAME | | | |
| DRAWN BY | | JOB No. | DRG No. |
| DATE DRAWN | 11/18/2024 | | TR67 |

Tekla structures

# BILL OF MATERIAL

| MARK | QTY | DESCRIPTION | LENGTH | WEIGHT | REMARKS |
|---|---|---|---|---|---|
| TR68 | 7 | TRUSSES | | | SQ-2 |
| N9 | 7 | 350S162-43 | 1'-2 3/4" | 9.77 | A913-GR.50 |
| N1 | 14 | 350S162-43 | 0'-7 1/4" | 9.59 | A913-GR.50 |
| N3 | 7 | 350S162-43 | 0'-7" | 4.66 | A913-GR.50 |
| N6 | 7 | 350S162-43 | 1'-2 1/16" | 9.34 | A913-GR.50 |
| N7 | 7 | 350S162-43 | 1'-7 1/16" | 12.65 | A913-GR.50 |
| N10 | 7 | 350S162-43 | 1'-0 3/4" | 8.44 | A913-GR.50 |
| N11 | 7 | 350S162-43 | 1'-2 3/4" | 9.77 | A913-GR.50 |
| | | TOTAL WEIGHT THIS DRAWING | | 64 | |

FRONT VIEW

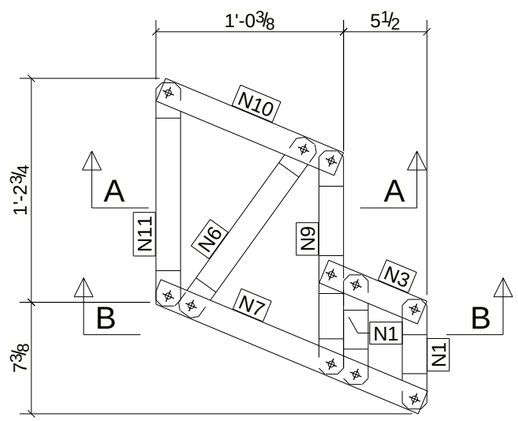


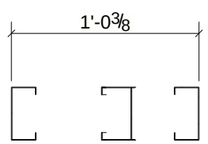


A - A

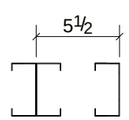


B - B

| REV | DESCRIPTION | DATE |
|---|---|---|
| | | |

| | | | |
|---|---|---|---|
| DESCRIPTION | | | |
| PROJECT NAME | | | |
| DRAWN BY | | JOB No. | DRG No. |
| DATE DRAWN | 07/18/2024 | | TR68 |

Tekla structures

# BILL OF MATERIAL

| MARK | QTY | DESCRIPTION | LENGTH | WEIGHT | REMARKS |
|---|---|---|---|---|---|
| TR69 | 1 | TRUSS | | | SQ-2 |
| BC62 | 1 | 350S162-43 | 1'-6 1/2" | 1.75 | A913-GR.50 |
| TC55 | 1 | 350S162-43 | 1'-6 1/2" | 1.75 | A913-GR.50 |
| W189 | 2 | 350S162-43 | 1'-6 15/16" | 3.58 | A913-GR.50 |
| W436 | 1 | 350S162-43 | 1'-11 1/16" | 2.18 | A913-GR.50 |
| | | TOTAL WEIGHT THIS DRAWING | | 9 | |

FRONT VIEW

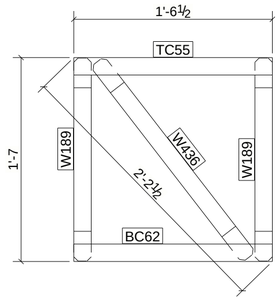


NOTES
1. NUMBER IN CIRCLE INDICATES THE TOTAL
   AMOUNT OF SCREWS PER CONNECTION ON BOTH SIDES.
2. INSTALL 1 SCREW ON EACH SIDE OF TRUSS UNLESS NOTED OTHERWISE

| REV | DESCRIPTION | DATE |
|---|---|---|
| | | |

| | | | |
|---|---|---|---|
| DESCRIPTION | | | |
| PROJECT NAME | | | |
| DRAWN BY | | JOB No. | DRG No. |
| DATE DRAWN | 07/16/2024 | | TR69 |

Tekla structures

# BILL OF MATERIAL

| MARK | QTY | DESCRIPTION | LENGTH | WEIGHT | REMARKS |
|---|---|---|---|---|---|
| TR70 | 1 | TRUSS | | | SQ-2 |
| BC64 | 1 | 350S162-43 | 1'-6 1/2" | 1.75 | A913-GR.50 |
| TC57 | 1 | 350S162-43 | 1'-6 1/2" | 1.75 | A913-GR.50 |
| W72 | 1 | 350S162-43 | 1'-8 7/8" | 1.98 | A913-GR.50 |
| W107 | 2 | 350S162-43 | 1'-4" | 3.03 | A913-GR.50 |
| | | TOTAL WEIGHT THIS DRAWING | | 9 | |

FRONT VIEW

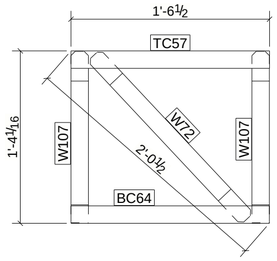


NOTES
1. NUMBER IN CIRCLE INDICATES THE TOTAL
   AMOUNT OF SCREWS PER CONNECTION ON BOTH SIDES.
2. INSTALL 1 SCREW ON EACH SIDE OF TRUSS UNLESS NOTED OTHERWISE

| REV | DESCRIPTION | DATE |
|---|---|---|
| | | |

| | | | |
|---|---|---|---|
| DESCRIPTION | | | |
| PROJECT NAME | | | |
| DRAWN BY | | JOB No. | DRG No. |
| DATE DRAWN | 07/16/2024 | | TR70 |

Tekla structures

# BILL OF MATERIAL

| MARK | QTY | DESCRIPTION | LENGTH | WEIGHT | REMARKS |
|---|---|---|---|---|---|
| TR71 | 1 | TRUSS | | | SQ-2 |
| P1 | 1 | 350S162-43 | 1'-10 5/16" | 2.11 | A913-GR.50 |
| P3 | 1 | 350S162-43 | 1'-4" | 1.51 | A913-GR.50 |
| P12 | 1 | 350S162-43 | 1'-8 1/2" | 1.94 | A913-GR.50 |
| P31 | 1 | 350S162-43 | 1'-4" | 1.51 | A913-GR.50 |
| P89 | 1 | 350S162-43 | 1'-8 1/2" | 1.94 | A913-GR.50 |
| | | TOTAL WEIGHT THIS DRAWING | | 9 | |

FRONT VIEW

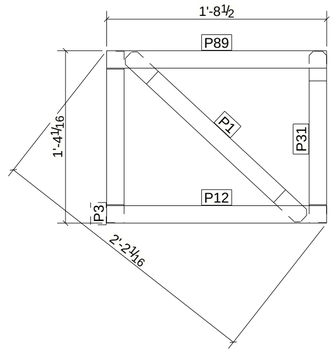


NOTES
1. NUMBER IN CIRCLE INDICATES THE TOTAL
   AMOUNT OF SCREWS PER CONNECTION ON BOTH SIDES.
2. INSTALL 1 SCREW ON EACH SIDE OF TRUSS UNLESS NOTED OTHERWISE

| REV | DESCRIPTION | DATE |
|---|---|---|
| | | |

| | | | |
|---|---|---|---|
| DESCRIPTION | | | |
| PROJECT NAME | | | |
| DRAWN BY | | JOB No. | DRG No. |
| DATE DRAWN | 07/16/2024 | | TR71 |

Tekla structures

# BILL OF MATERIAL

| MARK | QTY | DESCRIPTION | LENGTH | WEIGHT | REMARKS |
|---|---|---|---|---|---|
| TR72 | 1 | TRUSS | | | SQ-2 |
| P8 | 1 | 350S162-43 | 1'-9 5/16" | 2.02 | A913-GR.50 |
| P15 | 1 | 350S162-43 | 1'-8 1/2" | 1.94 | A913-GR.50 |
| P22 | 1 | 350S162-43 | 1'-8 1/2" | 1.94 | A913-GR.50 |
| P43 | 2 | 350S162-43 | 1'-2 1/2" | 2.74 | A913-GR.50 |
| | | TOTAL WEIGHT THIS DRAWING | | 9 | |

FRONT VIEW

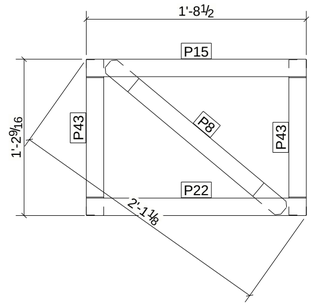


NOTES
1. NUMBER IN CIRCLE INDICATES THE TOTAL AMOUNT OF SCREWS PER CONNECTION ON BOTH SIDES.
2. INSTALL 1 SCREW ON EACH SIDE OF TRUSS UNLESS NOTED OTHERWISE

| REV | DESCRIPTION | DATE |
|---|---|---|
| | | |

| | | | |
|---|---|---|---|
| DESCRIPTION | | | |
| PROJECT NAME | | | |
| DRAWN BY | | JOB No. | DRG No. |
| DATE DRAWN | 07/16/2024 | | TR72 |

Tekla structures

# BILL OF MATERIAL

| MARK | QTY | DESCRIPTION | LENGTH | WEIGHT | REMARKS |
|---|---|---|---|---|---|
| TR73 | 2 | TRUSSES | | | SQ-2 |
| P1 | 2 | 350S162-43 | 1'-10 5/16" | 4.23 | A913-GR.50 |
| P3 | 2 | 350S162-43 | 1'-4" | 3.03 | A913-GR.50 |
| P13 | 2 | 350S162-43 | 1'-8 1/2" | 3.88 | A913-GR.50 |
| P16 | 2 | 350S162-43 | 1'-8 1/2" | 3.88 | A913-GR.50 |
| P31 | 2 | 350S162-43 | 1'-4" | 3.03 | A913-GR.50 |
| | | TOTAL WEIGHT THIS DRAWING | | 18 | |

FRONT VIEW

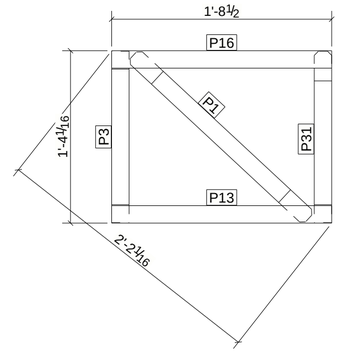


NOTES
1. NUMBER IN CIRCLE INDICATES THE TOTAL
   AMOUNT OF SCREWS PER CONNECTION ON BOTH SIDES.
2. INSTALL 1 SCREW ON EACH SIDE OF TRUSS UNLESS NOTED OTHERWISE

| REV | DESCRIPTION | DATE |
|---|---|---|
| | | |

| | | | |
|---|---|---|---|
| DESCRIPTION | | | |
| PROJECT NAME | | | |
| DRAWN BY | | JOB No. | DRG No. |
| DATE DRAWN | 07/16/2024 | | TR73 |

Tekla structures

FRONT VIEW

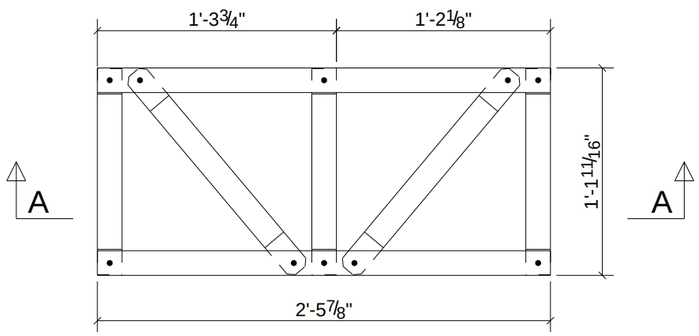


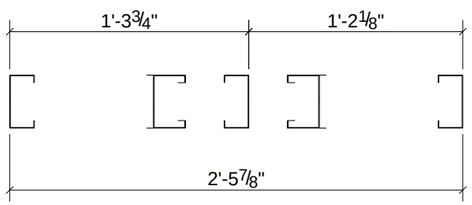


A - A

# BILL OF MATERIAL

| MARK | QTY | DESCRIPTION | LENGTH | WEIGHT | REMARKS |
|---|---|---|---|---|---|
| TR74 | 1 | TRUSS | | | SQ-2 |
| N16 | 1 | 350S162-43 | 2'-5 7/8" | 2.83 | A913-GR.50 |
| N17 | 1 | 350S162-43 | 2'-5 7/8" | 2.83 | A913-GR.50 |
| N18 | 3 | 350S162-43 | 1'-1 5/8" | 3.87 | A913-GR.50 |
| N19 | 2 | 350S162-43 | 1'-5 1/16" | 3.23 | A913-GR.50 |
| | | TOTAL WEIGHT THIS DRAWING | | 13 | |

NOTES
1. NUMBER IN CIRCLE INDICATES THE TOTAL
   AMOUNT OF SCREWS PER CONNECTION ON BOTH SIDES.
2. INSTALL 1 SCREW ON EACH SIDE OF TRUSS UNLESS NOTED OTHERWISE

| REV | DESCRIPTION | DATE |
|---|---|---|
| 1 | ROOF FRAMING UPDATE | 11/18/2024 |

| | | | |
|---|---|---|---|
| DESCRIPTION | | | |
| PROJECT NAME | | | |
| DRAWN BY | | JOB No. | DRG No. |
| DATE DRAWN | 11/18/2024 | | TR74 |

Tekla structures

# BILL OF MATERIAL

| MARK | QTY | DESCRIPTION | LENGTH | WEIGHT | REMARKS |
|---|---|---|---|---|---|
| TR75 | 1 | TRUSS | | | SQ-2 |
| P23 | 1 | 350S162-43 | 1'-8 1/2" | 1.94 | A913-GR.50 |
| P14 | 1 | 350S162-43 | 0'-3 1/4" | 0.31 | A913-GR.50 |
| P26 | 2 | 350S162-43 | 0'-4 15/16" | 0.93 | A913-GR.50 |
| P27 | 1 | 350S162-43 | 1'-5 1/4" | 1.63 | A913-GR.50 |
| P58 | 1 | 350S162-43 | 0'-3 3/16" | 0.30 | A913-GR.50 |
| W374 | 2 | 350S162-43 | 1'-0 7/16" | 2.35 | A913-GR.50 |
| W709 | 1 | 350S162-43 | 1'-8 5/8" | 1.96 | A913-GR.50 |
| | | TOTAL WEIGHT THIS DRAWING | | 9 | |

FRONT VIEW

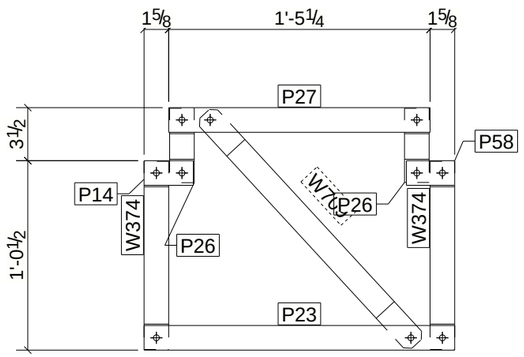


| REV | DESCRIPTION | DATE |
|---|---|---|
| | | |

| | | | |
|---|---|---|---|
| DESCRIPTION | | | |
| PROJECT NAME | | | |
| DRAWN BY | | JOB No. | DRG No. |
| DATE DRAWN | 08/14/2024 | | TR75 |

Tekla structures

# BILL OF MATERIAL

| MARK | QTY | DESCRIPTION | LENGTH | WEIGHT | REMARKS |
|---|---|---|---|---|---|
| TR77 | 3 | TRUSSES | | | SQ-2 |
| W425 | 3 | 350S162-43 | 2'-0 5/16" | 6.90 | A913-GR.50 |
| BC88 | 3 | 350S162-43 | 1'-8 1/2" | 5.83 | A913-GR.50 |
| TC76 | 3 | 350S162-43 | 1'-8 1/2" | 5.83 | A913-GR.50 |
| W87 | 6 | 350S162-43 | 1'-6 7/8" | 10.71 | A913-GR.50 |
| | | TOTAL WEIGHT THIS DRAWING | | 29 | |

FRONT VIEW

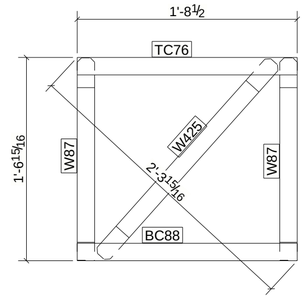


NOTES
1. NUMBER IN CIRCLE INDICATES THE TOTAL
   AMOUNT OF SCREWS PER CONNECTION ON BOTH SIDES.
2. INSTALL 1 SCREW ON EACH SIDE OF TRUSS UNLESS NOTED OTHERWISE

| REV | DESCRIPTION | DATE |
|---|---|---|
| | | |

| | | | |
|---|---|---|---|
| DESCRIPTION | | | |
| PROJECT NAME | | | |
| DRAWN BY | | JOB No. | DRG No. |
| DATE DRAWN | 07/16/2024 | | TR77 |

Tekla structures

# BILL OF MATERIAL

| MARK | QTY | DESCRIPTION | LENGTH | WEIGHT | REMARKS |
|---|---|---|---|---|---|
| TR80 | 1 | TRUSS | | | SQ-2 |
| P8 | 1 | 350S162-43 | 1'-9 5/16" | 2.02 | A913-GR.50 |
| P9 | 2 | 350S162-43 | 1'-2 1/2" | 2.74 | A913-GR.50 |
| P15 | 1 | 350S162-43 | 1'-8 1/2" | 1.94 | A913-GR.50 |
| P22 | 1 | 350S162-43 | 1'-8 1/2" | 1.94 | A913-GR.50 |
| | | TOTAL WEIGHT THIS DRAWING | | 9 | |

FRONT VIEW

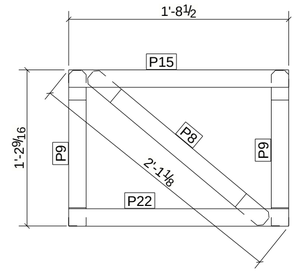


NOTES
1. NUMBER IN CIRCLE INDICATES THE TOTAL
   AMOUNT OF SCREWS PER CONNECTION ON BOTH SIDES.
2. INSTALL 1 SCREW ON EACH SIDE OF TRUSS UNLESS NOTED OTHERWISE

| REV | DESCRIPTION | DATE |
|---|---|---|
| | | |

| | | | |
|---|---|---|---|
| DESCRIPTION | | | |
| PROJECT NAME | | | |
| DRAWN BY | | JOB No. | DRG No. |
| DATE DRAWN | 07/16/2024 | | TR80 |

Tekla structures

# BILL OF MATERIAL

| MARK | QTY | DESCRIPTION | LENGTH | WEIGHT | REMARKS |
|---|---|---|---|---|---|
| TR81 | 1 | TRUSS | | | SQ-2 |
| P37 | 1 | 350S162-43 | 1'-9 7/16" | 2.03 | A913-GR.50 |
| P9 | 1 | 350S162-43 | 1'-2 1/2" | 1.37 | A913-GR.50 |
| P10 | 1 | 350S162-43 | 1'-8 1/2" | 1.94 | A913-GR.50 |
| P22 | 1 | 350S162-43 | 1'-8 1/2" | 1.94 | A913-GR.50 |
| P43 | 1 | 350S162-43 | 1'-2 1/2" | 1.37 | A913-GR.50 |
| | | TOTAL WEIGHT THIS DRAWING | | 9 | |

FRONT VIEW

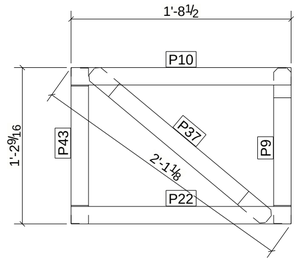


NOTES
1. NUMBER IN CIRCLE INDICATES THE TOTAL
   AMOUNT OF SCREWS PER CONNECTION ON BOTH SIDES.
2. INSTALL 1 SCREW ON EACH SIDE OF TRUSS UNLESS NOTED OTHERWISE

| REV | DESCRIPTION | DATE |
|---|---|---|
| | | |

| | | | |
|---|---|---|---|
| DESCRIPTION | | | |
| PROJECT NAME | | | |
| DRAWN BY | | JOB No. | DRG No. |
| DATE DRAWN | 07/16/2024 | | TR81 |

Tekla structures

# BILL OF MATERIAL

| MARK | QTY | DESCRIPTION | LENGTH | WEIGHT | REMARKS |
|---|---|---|---|---|---|
| TR82 | 1 | TRUSS | | | SQ-2 |
| BC76 | 1 | 350S162-43 | 1'-8 1/2" | 1.94 | A913-GR.50 |
| TC75 | 1 | 350S162-43 | 1'-8 1/2" | 1.94 | A913-GR.50 |
| W108 | 2 | 350S162-43 | 1'-4 1/2" | 3.12 | A913-GR.50 |
| W406 | 1 | 350S162-43 | 1'-10 5/8" | 2.14 | A913-GR.50 |
| | | TOTAL WEIGHT THIS DRAWING | | 9 | |

FRONT VIEW

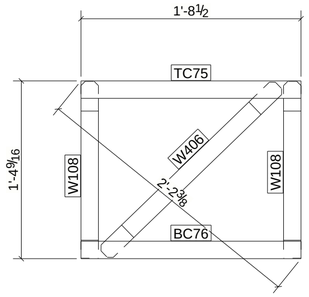


NOTES
1. NUMBER IN CIRCLE INDICATES THE TOTAL
   AMOUNT OF SCREWS PER CONNECTION ON BOTH SIDES.
2. INSTALL 1 SCREW ON EACH SIDE OF TRUSS UNLESS NOTED OTHERWISE

| REV | DESCRIPTION | DATE |
|---|---|---|
| | | |

| | | | |
|---|---|---|---|
| DESCRIPTION | | | |
| PROJECT NAME | | | |
| DRAWN BY | | JOB No. | DRG No. |
| DATE DRAWN | 07/16/2024 | | TR82 |

Tekla structures

# BILL OF MATERIAL

| MARK | QTY | DESCRIPTION | LENGTH | WEIGHT | REMARKS |
|---|---|---|---|---|---|
| TR83 | 1 | TRUSS | | | SQ-2 |
| BC63 | 1 | 350S162-43 | 1'-4 3/4" | 1.59 | A913-GR.50 |
| TC56 | 1 | 350S162-43 | 1'-4 3/4" | 1.59 | A913-GR.50 |
| W108 | 2 | 350S162-43 | 1'-4 1/2" | 3.12 | A913-GR.50 |
| W526 | 1 | 350S162-43 | 1'-8 1/16" | 1.90 | A913-GR.50 |
| | | TOTAL WEIGHT THIS DRAWING | | 8 | |

FRONT VIEW

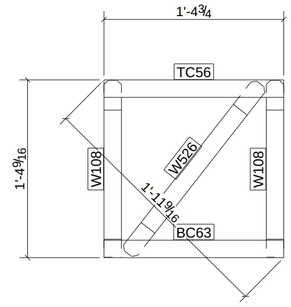


NOTES
1. NUMBER IN CIRCLE INDICATES THE TOTAL
   AMOUNT OF SCREWS PER CONNECTION ON BOTH SIDES.
2. INSTALL 1 SCREW ON EACH SIDE OF TRUSS UNLESS NOTED OTHERWISE

| REV | DESCRIPTION | DATE |
|---|---|---|
| | | |

| | | | |
|---|---|---|---|
| DESCRIPTION | | | |
| PROJECT NAME | | | |
| DRAWN BY | | JOB No. | DRG No. |
| DATE DRAWN | 07/16/2024 | | TR83 |

Tekla structures

# BILL OF MATERIAL

| MARK | QTY | DESCRIPTION | LENGTH | WEIGHT | REMARKS |
|---|---|---|---|---|---|
| TR84 | 1 | TRUSS | | | SQ-2 |
| BC61 | 1 | 350S162-43 | 2'-6" | 2.84 | A913-GR.50 |
| TC21 | 1 | 350S162-43 | 2'-6" | 2.84 | A913-GR.50 |
| W81 | 3 | 350S162-43 | 1'-4 1/2" | 4.68 | A913-GR.50 |
| W424 | 1 | 350S162-43 | 1'-7 7/16" | 1.84 | A913-GR.50 |
| W670 | 1 | 350S162-43 | 1'-7 9/16" | 1.85 | A913-GR.50 |
| | | TOTAL WEIGHT THIS DRAWING | | 14 | |

FRONT VIEW

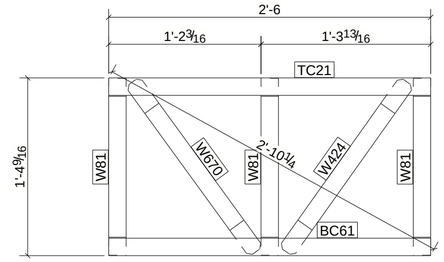


NOTES
1. NUMBER IN CIRCLE INDICATES THE TOTAL
   AMOUNT OF SCREWS PER CONNECTION ON BOTH SIDES.
2. INSTALL 1 SCREW ON EACH SIDE OF TRUSS UNLESS NOTED OTHERWISE

| REV | DESCRIPTION | DATE |
|---|---|---|
| | | |

| | | | |
|---|---|---|---|
| DESCRIPTION | | | |
| PROJECT NAME | | | |
| DRAWN BY | | JOB No. | DRG No. |
| DATE DRAWN | 07/16/2024 | | TR84 |

Tekla structures

# BILL OF MATERIAL

| MARK | QTY | DESCRIPTION | LENGTH | WEIGHT | REMARKS |
|---|---|---|---|---|---|
| TR85 | 1 | TRUSS | | | SQ-2 |
| P62 | 1 | 350S162-43 | 1'-2 3/4" | 1.40 | A913-GR.50 |
| TC61 | 1 | 350S162-43 | 1'-2 3/4" | 1.40 | A913-GR.50 |
| W108 | 2 | 350S162-43 | 1'-4 1/2" | 3.12 | A913-GR.50 |
| W710 | 1 | 350S162-43 | 1'-6 15/16" | 1.79 | A913-GR.50 |
| | | TOTAL WEIGHT THIS DRAWING | | 8 | |

FRONT VIEW

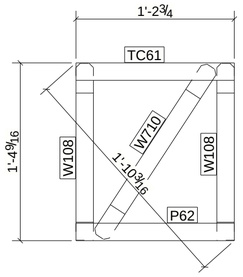


NOTES
1. NUMBER IN CIRCLE INDICATES THE TOTAL AMOUNT OF SCREWS PER CONNECTION ON BOTH SIDES.
2. INSTALL 1 SCREW ON EACH SIDE OF TRUSS UNLESS NOTED OTHERWISE

| REV | DESCRIPTION | DATE |
|---|---|---|
| | | |

| | | | |
|---|---|---|---|
| DESCRIPTION | | | |
| PROJECT NAME | | | |
| DRAWN BY | | JOB No. | DRG No. |
| DATE DRAWN | 07/16/2024 | | TR85 |

Tekla structures

# BILL OF MATERIAL

| MARK | QTY | DESCRIPTION | LENGTH | WEIGHT | REMARKS |
|---|---|---|---|---|---|
| TR91 | 1 | TRUSS | | | SQ-2 |
| BC65 | 1 | 350S162-43 | 1'-6 9/16" | 1.76 | A913-GR.50 |
| TC58 | 1 | 350S162-43 | 1'-6 9/16" | 1.76 | A913-GR.50 |
| W178 | 1 | 350S162-43 | 2'-1 5/8" | 2.43 | A913-GR.50 |
| W290 | 2 | 350S162-43 | 1'-10" | 4.17 | A913-GR.50 |
| | | TOTAL WEIGHT THIS DRAWING | | 10 | |

FRONT VIEW

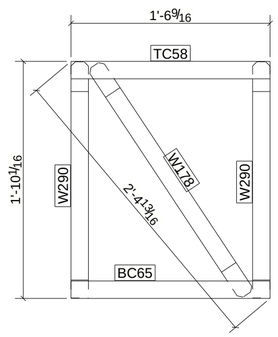


NOTES
1. NUMBER IN CIRCLE INDICATES THE TOTAL AMOUNT OF SCREWS PER CONNECTION ON BOTH SIDES.
2. INSTALL 1 SCREW ON EACH SIDE OF TRUSS UNLESS NOTED OTHERWISE

| REV | DESCRIPTION | DATE |
|---|---|---|
| | | |

| | | | |
|---|---|---|---|
| DESCRIPTION | | | |
| PROJECT NAME | | | |
| DRAWN BY | | JOB No. | DRG No. |
| DATE DRAWN | 07/16/2024 | | TR91 |

Tekla structures

# BILL OF MATERIAL

| MARK | QTY | DESCRIPTION | LENGTH | WEIGHT | REMARKS |
|---|---|---|---|---|---|
| TR97 | 1 | TRUSS | | | SQ-2 |
| P13 | 1 | 350S162-43 | 1'-8 1/2" | 1.94 | A913-GR.50 |
| P28 | 1 | 350S162-43 | 1'-8 1/2" | 1.94 | A913-GR.50 |
| P38 | 2 | 350S162-43 | 1'-4 1/2" | 3.12 | A913-GR.50 |
| P180 | 1 | 350S162-43 | 1'-10 3/4" | 2.15 | A913-GR.50 |
| | | TOTAL WEIGHT THIS DRAWING | | 9 | |

FRONT VIEW

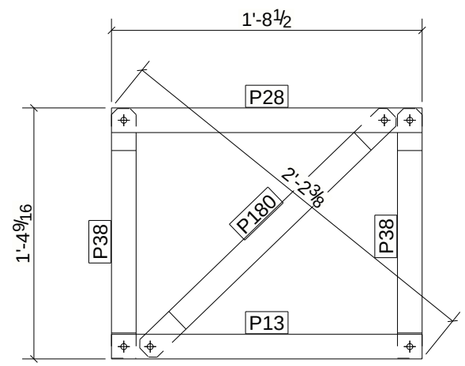


| REV | DESCRIPTION | DATE |
|---|---|---|
| | | |

| | | | |
|---|---|---|---|
| DESCRIPTION | | | |
| PROJECT NAME | | | |
| DRAWN BY | | JOB No. | DRG No. |
| DATE DRAWN | 07/16/2024 | | TR97 |

Tekla structures

# BILL OF MATERIAL

| MARK | QTY | DESCRIPTION | LENGTH | WEIGHT | REMARKS |
|---|---|---|---|---|---|
| TR99 | 1 | TRUSS | | | SQ-2 |
| P13 | 1 | 350S162-43 | 1'-8 1/2" | 1.94 | A913-GR.50 |
| P21 | 1 | 350S162-43 | 1'-8 1/2" | 1.94 | A913-GR.50 |
| P38 | 2 | 350S162-43 | 1'-4 1/2" | 3.12 | A913-GR.50 |
| P95 | 1 | 350S162-43 | 1'-10 5/8" | 2.14 | A913-GR.50 |
| | | TOTAL WEIGHT THIS DRAWING | | 9 | |

FRONT VIEW

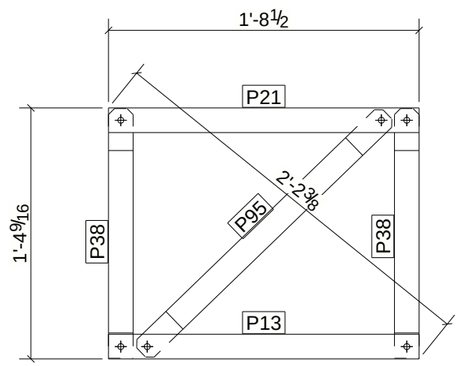


NOTES
1. NUMBER IN CIRCLE INDICATES THE TOTAL AMOUNT OF SCREWS PER CONNECTION ON BOTH SIDES.
2. INSTALL 1 SCREW ON EACH SIDE OF TRUSS UNLESS NOTED OTHERWISE

| REV | DESCRIPTION | DATE |
|---|---|---|
| | | |

| | | | |
|---|---|---|---|
| DESCRIPTION | | | |
| PROJECT NAME | | | |
| DRAWN BY | | JOB No. | DRG No. |
| DATE DRAWN | 07/16/2024 | | TR99 |

Tekla structures

# BILL OF MATERIAL

| MARK | QTY | DESCRIPTION | LENGTH | WEIGHT | REMARKS |
|---|---|---|---|---|---|
| TR101 | 3 | TRUSSES | | | SQ-2 |
| BC66 | 3 | 350S162-43 | 1'-8 1/2" | 5.83 | A913-GR.50 |
| TC81 | 3 | 350S162-43 | 1'-8 1/2" | 5.83 | A913-GR.50 |
| W661 | 6 | 350S162-43 | 1'-9 3/4" | 12.35 | A913-GR.50 |
| W697 | 3 | 350S162-43 | 2'-2 1/2" | 7.53 | A913-GR.50 |
| | | TOTAL WEIGHT THIS DRAWING | | 32 | |

FRONT VIEW

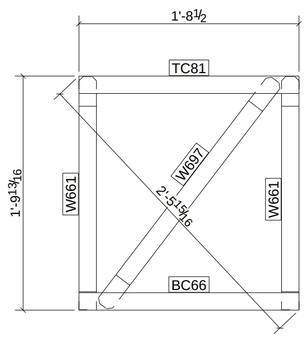


NOTES
1. NUMBER IN CIRCLE INDICATES THE TOTAL
   AMOUNT OF SCREWS PER CONNECTION ON BOTH SIDES.
2. INSTALL 1 SCREW ON EACH SIDE OF TRUSS UNLESS NOTED OTHERWISE

| REV | DESCRIPTION | DATE |
|---|---|---|
| | | |

| | | | |
|---|---|---|---|
| DESCRIPTION | | | |
| PROJECT NAME | | | |
| DRAWN BY | | JOB No. | DRG No. |
| DATE DRAWN | 07/16/2024 | | TR101 |

Tekla structures

# BILL OF MATERIAL

| MARK | QTY | DESCRIPTION | LENGTH | WEIGHT | REMARKS |
|---|---|---|---|---|---|
| TR102 | 1 | TRUSS | | | SQ-2 |
| BC54 | 1 | 350S162-43 | 1'-8 1/2" | 1.94 | A913-GR.50 |
| TC51 | 1 | 350S162-43 | 1'-8 1/2" | 1.94 | A913-GR.50 |
| W87 | 2 | 350S162-43 | 1'-6 7/8" | 3.57 | A913-GR.50 |
| W624 | 1 | 350S162-43 | 2'-0 1/2" | 2.32 | A913-GR.50 |
| | | TOTAL WEIGHT THIS DRAWING | | 10 | |

FRONT VIEW

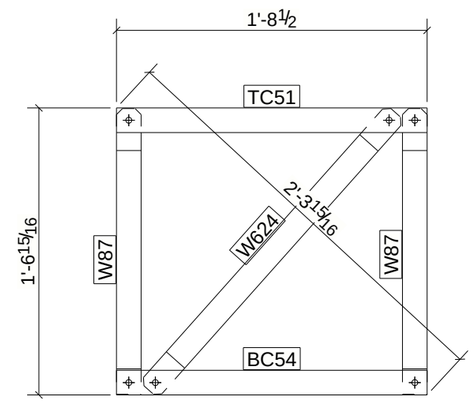


| REV | DESCRIPTION | DATE |
|---|---|---|
| | | |

| | | | |
|---|---|---|---|
| DESCRIPTION | | | |
| PROJECT NAME | | | |
| DRAWN BY | | JOB No. | DRG No. |
| DATE DRAWN | 07/16/2024 | | TR102 |

Tekla structures

# BILL OF MATERIAL

| MARK | QTY | DESCRIPTION | LENGTH | WEIGHT | REMARKS |
|---|---|---|---|---|---|
| TR108 | 1 | TRUSS | | | SQ-2 |
| BC88 | 1 | 350S162-43 | 1'-8 1/2" | 1.94 | A913-GR.50 |
| TC82 | 1 | 350S162-43 | 1'-8 1/2" | 1.94 | A913-GR.50 |
| W434 | 1 | 350S162-43 | 2'-0 3/16" | 2.29 | A913-GR.50 |
| W454 | 2 | 350S162-43 | 1'-6 13/16" | 3.56 | A913-GR.50 |
| | | TOTAL WEIGHT THIS DRAWING | | 10 | |

FRONT VIEW

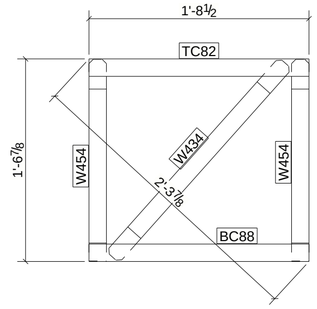


NOTES
1. NUMBER IN CIRCLE INDICATES THE TOTAL
   AMOUNT OF SCREWS PER CONNECTION ON BOTH SIDES.
2. INSTALL 1 SCREW ON EACH SIDE OF TRUSS UNLESS NOTED OTHERWISE

| REV | DESCRIPTION | DATE |
|---|---|---|
| | | |

| | | | |
|---|---|---|---|
| DESCRIPTION | | | |
| PROJECT NAME | | | |
| DRAWN BY | | JOB No. | DRG No. |
| DATE DRAWN | 07/16/2024 | | TR108 |

Tekla structures

# BILL OF MATERIAL

| MARK | QTY | DESCRIPTION | LENGTH | WEIGHT | REMARKS |
|---|---|---|---|---|---|
| TR112 | 1 | TRUSS | | | SQ-2 |
| BC82 | 1 | 350S162-43 | 1'-8 1/2" | 1.94 | A913-GR.50 |
| TC74 | 1 | 350S162-43 | 1'-8 1/2" | 1.94 | A913-GR.50 |
| W434 | 1 | 350S162-43 | 2'-0 3/16" | 2.29 | A913-GR.50 |
| W454 | 2 | 350S162-43 | 1'-6 13/16" | 3.56 | A913-GR.50 |
| | | TOTAL WEIGHT THIS DRAWING | | 10 | |

FRONT VIEW

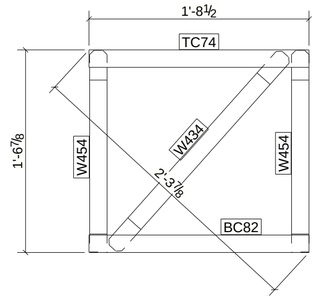


NOTES
1. NUMBER IN CIRCLE INDICATES THE TOTAL
   AMOUNT OF SCREWS PER CONNECTION ON BOTH SIDES.
2. INSTALL 1 SCREW ON EACH SIDE OF TRUSS UNLESS NOTED OTHERWISE

| REV | DESCRIPTION | DATE |
|---|---|---|
| | | |

| | | | |
|---|---|---|---|
| DESCRIPTION | | | |
| PROJECT NAME | | | |
| DRAWN BY | | JOB No. | DRG No. |
| DATE DRAWN | 07/16/2024 | | TR112 |

Tekla structures

# BILL OF MATERIAL

| MARK | QTY | DESCRIPTION | LENGTH | WEIGHT | REMARKS |
|---|---|---|---|---|---|
| TR113 | 1 | TRUSS | | | SQ-2 |
| BC81 | 1 | 350S162-43 | 1'-8 7/16" | 1.94 | A913-GR.50 |
| TC73 | 1 | 350S162-43 | 1'-8 1/2" | 1.94 | A913-GR.50 |
| W87 | 2 | 350S162-43 | 1'-6 7/8" | 3.57 | A913-GR.50 |
| W425 | 1 | 350S162-43 | 2'-0 5/16" | 2.30 | A913-GR.50 |
| | | TOTAL WEIGHT THIS DRAWING | | 10 | |

FRONT VIEW

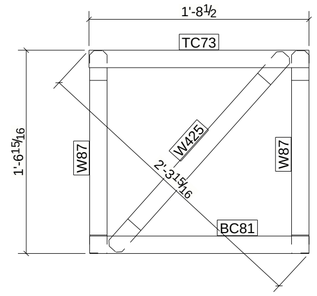


NOTES
1. NUMBER IN CIRCLE INDICATES THE TOTAL
   AMOUNT OF SCREWS PER CONNECTION ON BOTH SIDES.
2. INSTALL 1 SCREW ON EACH SIDE OF TRUSS UNLESS NOTED OTHERWISE

| REV | DESCRIPTION | DATE |
|---|---|---|
| | | |

| | | | |
|---|---|---|---|
| DESCRIPTION | | | |
| PROJECT NAME | | | |
| DRAWN BY | | JOB No. | DRG No. |
| DATE DRAWN | 07/16/2024 | | TR113 |

Tekla structures

FRONT VIEW

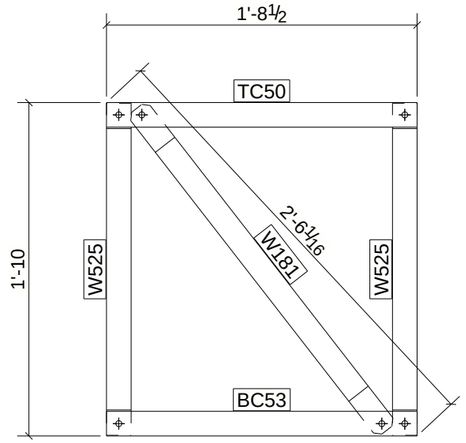


# BILL OF MATERIAL

| MARK | QTY | DESCRIPTION | LENGTH | WEIGHT | REMARKS |
|---|---|---|---|---|---|
| TR117 | 1 | TRUSS | | | SQ-2 |
| BC53 | 1 | 350S162-43 | 1'-8 1/2" | 1.94 | A913-GR.50 |
| TC50 | 1 | 350S162-43 | 1'-8 1/2" | 1.94 | A913-GR.50 |
| W181 | 1 | 350S162-43 | 2'-2 7/8" | 2.55 | A913-GR.50 |
| W525 | 2 | 350S162-43 | 1'-9 15/16" | 4.15 | A913-GR.50 |
| | | TOTAL WEIGHT THIS DRAWING | | 11 | |

| REV | DESCRIPTION | DATE |
|---|---|---|
| | | |

| | | | |
|---|---|---|---|
| DESCRIPTION | | | |
| PROJECT NAME | | | |
| DRAWN BY | | JOB No. | DRG No. |
| DATE DRAWN | 07/16/2024 | | TR117 |

Tekla structures

# BILL OF MATERIAL

| MARK | QTY | DESCRIPTION | LENGTH | WEIGHT | REMARKS |
|---|---|---|---|---|---|
| TR118 | 1 | TRUSS | | | SQ-2 |
| P34 | 1 | 350S162-43 | 1'-8 1/2" | 1.94 | A913-GR.50 |
| P14 | 1 | 350S162-43 | 0'-3 1/4" | 0.31 | A913-GR.50 |
| P54 | 2 | 350S162-43 | 0'-3 1/16" | 0.57 | A913-GR.50 |
| P58 | 1 | 350S162-43 | 0'-3 3/16" | 0.30 | A913-GR.50 |
| P60 | 1 | 350S162-43 | 1'-5 1/4" | 1.63 | A913-GR.50 |
| W225 | 1 | 350S162-43 | 1'-11" | 2.18 | A913-GR.50 |
| W539 | 2 | 350S162-43 | 1'-5 3/8" | 3.29 | A913-GR.50 |
| | | TOTAL WEIGHT THIS DRAWING | | 10 | |

FRONT VIEW

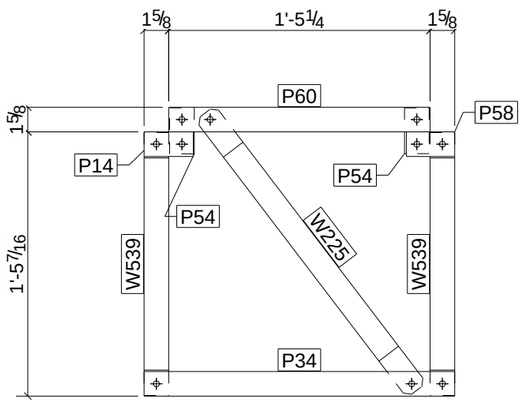


| REV | DESCRIPTION | DATE |
|---|---|---|
| | | |

| | | | |
|---|---|---|---|
| DESCRIPTION | | | |
| PROJECT NAME | | | |
| DRAWN BY | | JOB No. | DRG No. |
| DATE DRAWN | 07/16/2024 | | TR118 |

Tekla structures

# BILL OF MATERIAL

| MARK | QTY | DESCRIPTION | LENGTH | WEIGHT | REMARKS |
|---|---|---|---|---|---|
| TR130 | 6 | TRUSSES | | | SQ-2 |
| BC88 | 6 | 350S162-43 | 1'-8 1/2" | 11.65 | A913-GR.50 |
| TC82 | 6 | 350S162-43 | 1'-8 1/2" | 11.65 | A913-GR.50 |
| W189 | 12 | 350S162-43 | 1'-6 15/16" | 21.50 | A913-GR.50 |
| W425 | 6 | 350S162-43 | 2'-0 5/16" | 13.81 | A913-GR.50 |
| | | TOTAL WEIGHT THIS DRAWING | | 59 | |

FRONT VIEW

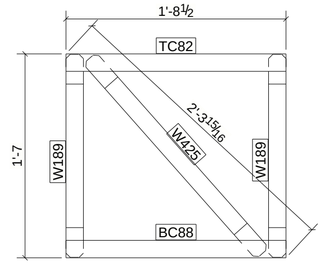


NOTES
1. NUMBER IN CIRCLE INDICATES THE TOTAL
   AMOUNT OF SCREWS PER CONNECTION ON BOTH SIDES.
2. INSTALL 1 SCREW ON EACH SIDE OF TRUSS UNLESS NOTED OTHERWISE

| REV | DESCRIPTION | DATE |
|---|---|---|
| | | |

| | | | |
|---|---|---|---|
| DESCRIPTION | | | |
| PROJECT NAME | | | |
| DRAWN BY | | JOB No. | DRG No. |
| DATE DRAWN | 08/14/2024 | | TR130 |

Tekla structures

FRONT VIEW

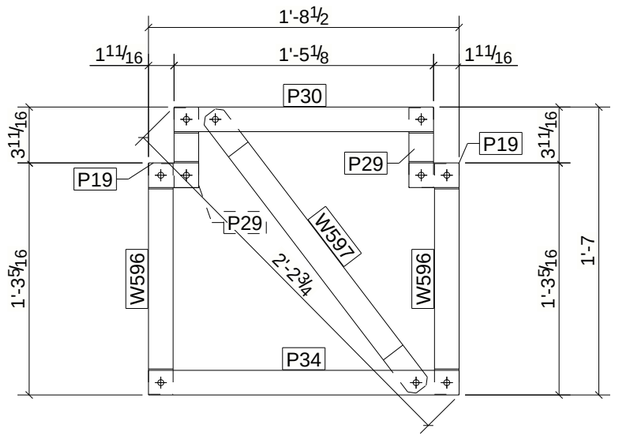


# BILL OF MATERIAL

| MARK | QTY | DESCRIPTION | LENGTH | WEIGHT | REMARKS |
|---|---|---|---|---|---|
| TR131 | 1 | TRUSS | | | SQ-2 |
| P34 | 1 | 350S162-43 | 1'-8 1/2" | 1.94 | A913-GR.50 |
| P19 | 2 | 350S162-43 | 0'-3 5/16" | 0.63 | A913-GR.50 |
| P29 | 2 | 350S162-43 | 0'-5 5/16" | 1.00 | A913-GR.50 |
| P30 | 1 | 350S162-43 | 1'-5 1/8" | 1.62 | A913-GR.50 |
| W596 | 2 | 350S162-43 | 1'-3 1/4" | 2.88 | A913-GR.50 |
| W597 | 1 | 350S162-43 | 1'-10 15/16" | 2.17 | A913-GR.50 |
| | | TOTAL WEIGHT THIS DRAWING | | 10 | |

| REV | DESCRIPTION | DATE |
|---|---|---|
| | | |

| | | | |
|---|---|---|---|
| DESCRIPTION | | | |
| PROJECT NAME | | | |
| DRAWN BY | | JOB No. | DRG No. |
| DATE DRAWN | 08/14/2024 | | TR131 |

Tekla structures

FRONT VIEW

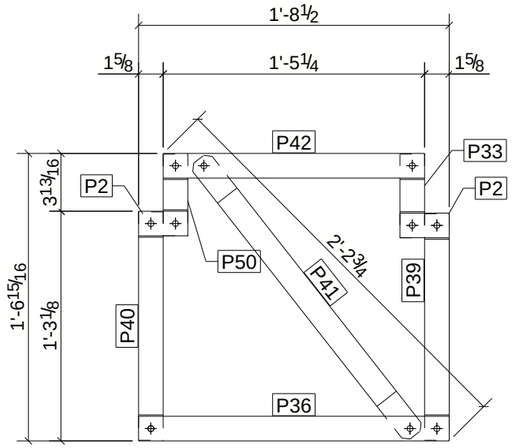


# BILL OF MATERIAL

| MARK | QTY | DESCRIPTION | LENGTH | WEIGHT | REMARKS |
|---|---|---|---|---|---|
| TR132 | 1 | TRUSS | | | SQ-2 |
| P36 | 1 | 350S162-43 | 1'-8 1/2" | 1.94 | A913-GR.50 |
| P2 | 2 | 350S162-43 | 0'-3 1/4" | 0.62 | A913-GR.50 |
| P33 | 1 | 350S162-43 | 0'-5 1/2" | 0.52 | A913-GR.50 |
| P39 | 1 | 350S162-43 | 1'-2 15/16" | 1.42 | A913-GR.50 |
| P40 | 1 | 350S162-43 | 1'-3 1/16" | 1.43 | A913-GR.50 |
| P41 | 1 | 350S162-43 | 1'-11 1/8" | 2.19 | A913-GR.50 |
| P42 | 1 | 350S162-43 | 1'-5 1/4" | 1.63 | A913-GR.50 |
| P50 | 1 | 350S162-43 | 0'-5 3/8" | 0.51 | A913-GR.50 |
| | | TOTAL WEIGHT THIS DRAWING | | 10 | |

| REV | DESCRIPTION | DATE |
|---|---|---|
| | | |

| | | | |
|---|---|---|---|
| DESCRIPTION | | | |
| PROJECT NAME | | | |
| DRAWN BY | | JOB No. | DRG No. |
| DATE DRAWN | 08/14/2024 | | TR132 |

Tekla structures

# BILL OF MATERIAL

| MARK | QTY | DESCRIPTION | LENGTH | WEIGHT | REMARKS |
|---|---|---|---|---|---|
| TR135 | 6 | TRUSSES | | | SQ-2 |
| BC80 | 6 | 350S162-43 | 1'-8 1/2" | 11.64 | A913-GR.50 |
| TC72 | 6 | 350S162-43 | 1'-8 1/2" | 11.65 | A913-GR.50 |
| W107 | 12 | 350S162-43 | 1'-4" | 18.16 | A913-GR.50 |
| W461 | 6 | 350S162-43 | 1'-10 1/4" | 12.66 | A913-GR.50 |
| | | TOTAL WEIGHT THIS DRAWING | | 54 | |

FRONT VIEW

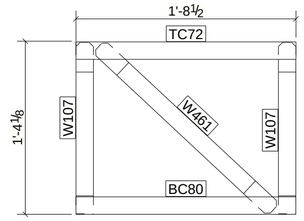


NOTES
1. NUMBER IN CIRCLE INDICATES THE TOTAL
   AMOUNT OF SCREWS PER CONNECTION ON BOTH SIDES.
2. INSTALL 1 SCREW ON EACH SIDE OF TRUSS UNLESS NOTED OTHERWISE

| REV | DESCRIPTION | DATE |
|---|---|---|
| | | |

| | | | |
|---|---|---|---|
| DESCRIPTION | | | |
| PROJECT NAME | | | |
| DRAWN BY | | JOB No. | DRG No. |
| DATE DRAWN | 08/14/2024 | | TR135 |

Tekla structures

# BILL OF MATERIAL

| MARK | QTY | DESCRIPTION | LENGTH | WEIGHT | REMARKS |
|---|---|---|---|---|---|
| TR136 | 1 | TRUSS | | | SQ-2 |
| BC32 | 1 | 350S162-43 | 35'-9 1/2" | 40.68 | A913-GR.50 |
| P20 | 2 | 350S162-43 | 3'-9 1/8" | 8.55 | A913-GR.50 |
| PL29 | 6 | PL0.0430X3.0000 | 0'-6" | 1.32 | A36 |
| PL30 | 2 | PL0.0430X3.0000 | 0'-10" | 0.73 | A36 |
| R4 | 2 | 350S162-43 | 28'-9 7/8" | 65.52 | A913-GR.50 |
| TC47 | 1 | 350S162-43 | 3'-9 3/16" | 4.28 | A913-GR.50 |
| TC86 | 1 | 350S162-43 | 35'-9 9/16" | 40.69 | A913-GR.50 |
| W86 | 1 | 350S162-43 | 1'-7 1/4" | 1.82 | A913-GR.50 |
| W96 | 1 | 350S162-43 | 2'-2 3/8" | 2.50 | A913-GR.50 |
| W97 | 1 | 350S162-43 | 1'-6 1/4" | 1.73 | A913-GR.50 |
| W109 | 1 | 350S162-43 | 1'-4 7/8" | 1.60 | A913-GR.50 |
| W140 | 1 | 350S162-43 | 1'-5 13/16" | 1.69 | A913-GR.50 |
| W147 | 1 | 350S162-43 | 1'-8 5/8" | 1.96 | A913-GR.50 |
| W151 | 1 | 350S162-43 | 2'-1 1/2" | 2.41 | A913-GR.50 |
| W178 | 1 | 350S162-43 | 2'-1 5/8" | 2.43 | A913-GR.50 |
| W209 | 1 | 350S162-43 | 2'-4 1/4" | 2.67 | A913-GR.50 |
| W210 | 1 | 350S162-43 | 2'-3 5/8" | 2.62 | A913-GR.50 |
| W211 | 1 | 350S162-43 | 2'-3 5/16" | 2.59 | A913-GR.50 |
| W244 | 1 | 350S162-43 | 1'-3 15/16" | 1.51 | A913-GR.50 |
| W249 | 1 | 350S162-43 | 2'-2 11/16" | 2.53 | A913-GR.50 |
| W250 | 1 | 350S162-43 | 2'-1 3/4" | 2.44 | A913-GR.50 |
| W294 | 1 | 350S162-43 | 1'-7 11/16" | 1.87 | A913-GR.50 |
| W297 | 1 | 350S162-43 | 2'-2 1/16" | 2.47 | A913-GR.50 |
| W300 | 1 | 350S162-43 | 2'-3" | 2.56 | A913-GR.50 |
| W302 | 1 | 350S162-43 | 1'-6 3/4" | 1.78 | A913-GR.50 |
| W304 | 1 | 350S162-43 | 1'-5 5/16" | 1.64 | A913-GR.50 |
| W305 | 1 | 350S162-43 | 1'-4 3/8" | 1.55 | A913-GR.50 |
| W322 | 1 | 350S162-43 | 1'-9 15/16" | 2.08 | A913-GR.50 |
| W372 | 1 | 350S162-43 | 1'-9 5/8" | 2.05 | A913-GR.50 |
| W375 | 1 | 350S150-43 | 5'-0 3/8" | 5.31 | A913-GR.50 |
| W376 | 1 | 350S162-43 | 2'-0 5/8" | 2.33 | A913-GR.50 |
| W378 | 1 | 350S162-43 | 1'-11 7/16" | 2.22 | A913-GR.50 |
| W408 | 1 | 350S162-43 | 1'-8 3/16" | 1.91 | A913-GR.50 |
| W471 | 1 | 350S162-43 | 2'-0 9/16" | 2.33 | A913-GR.50 |
| W472 | 1 | 350S162-43 | 1'-2 1/2" | 1.37 | A913-GR.50 |
| W491 | 1 | 350S162-43 | 1'-3 3/16" | 1.44 | A913-GR.50 |
| W541 | 1 | 350S162-43 | 1'-3 3/16" | 1.44 | A913-GR.50 |
| W552 | 1 | 350S162-43 | 1'-3 7/16" | 1.46 | A913-GR.50 |
| W585 | 1 | 350S162-43 | 1'-10 7/8" | 2.16 | A913-GR.50 |
| W591 | 1 | 350S162-43 | 1'-10 7/16" | 2.13 | A913-GR.50 |
| W592 | 1 | 350S162-43 | 2'-7 9/16" | 2.99 | A913-GR.50 |
| W593 | 1 | 350S162-43 | 2'-6 1/8" | 2.85 | A913-GR.50 |
| W594 | 1 | 350S162-43 | 2'-5 15/16" | 2.83 | A913-GR.50 |
| p36 | 2 | PL0.0430X3.0259 | 0'-3 1/2" | 0.26 | A36 |
| p43 | 2 | PL0.0430X7.7602 | 2'-5 1/16" | 5.06 | A36 |
| p44 | 2 | PL0.0430X7.7484 | 2'-0 3/16" | 4.16 | A36 |
| | | TOTAL WEIGHT THIS DRAWING | | 251 | |

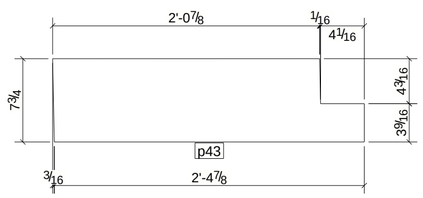


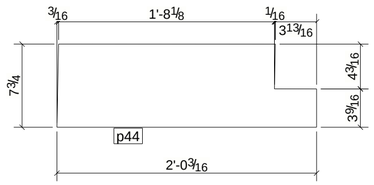


FRONT VIEW

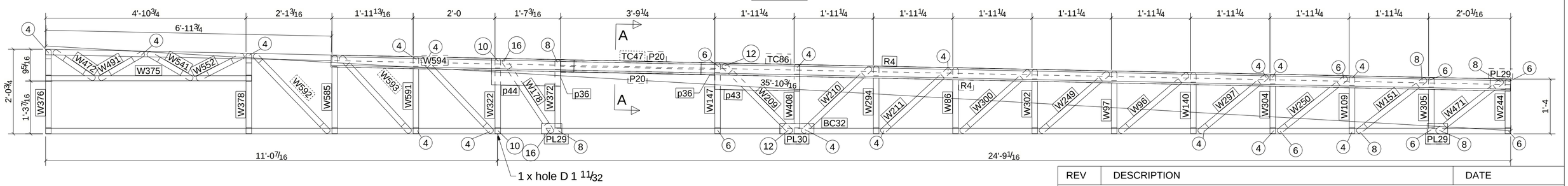


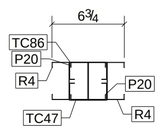


A - A

NOTES
1. NUMBER IN CIRCLE INDICATES THE TOTAL AMOUNT OF SCREWS PER CONNECTION ON BOTH SIDES.
2. INSTALL 1 SCREW ON EACH SIDE OF TRUSS UNLESS NOTED OTHERWISE

| REV | DESCRIPTION | DATE |
|---|---|---|
| | | |

| | | | |
|---|---|---|---|
| DESCRIPTION | | | |
| PROJECT NAME | | | |
| DRAWN BY | | JOB No. | DRG No. |
| DATE DRAWN | 08/14/2024 | | TR136 |

Tekla structures

# BILL OF MATERIAL

| MARK | QTY | DESCRIPTION | LENGTH | WEIGHT | REMARKS |
|---|---|---|---|---|---|
| TR119 | 1 | TRUSS | | | SQ-2 |
| BC78 | 1 | 350S162-43 | 1'-8 1/2" | 1.94 | A913-GR.50 |
| TC70 | 1 | 350S162-43 | 1'-8 3/8" | 1.93 | A913-GR.50 |
| W156 | 1 | 350S162-43 | 2'-2 11/16" | 2.53 | A913-GR.50 |
| W589 | 2 | 350S162-43 | 1'-10" | 4.16 | A913-GR.50 |
| | | TOTAL WEIGHT THIS DRAWING | | 11 | |

FRONT VIEW

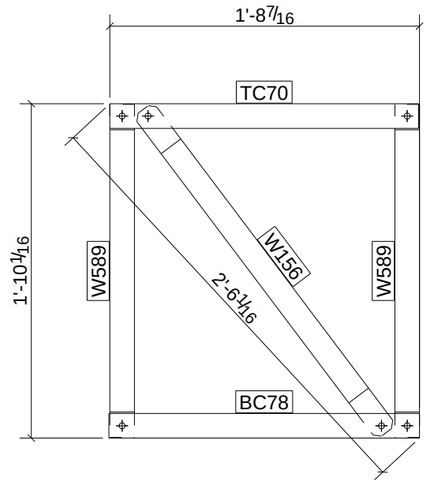


| REV | DESCRIPTION | DATE |
|---|---|---|
| | | |

| | | | |
|---|---|---|---|
| DESCRIPTION | | | |
| PROJECT NAME | | | |
| DRAWN BY | | JOB No. | DRG No. |
| DATE DRAWN | 07/16/2024 | | TR119 |

Tekla structures